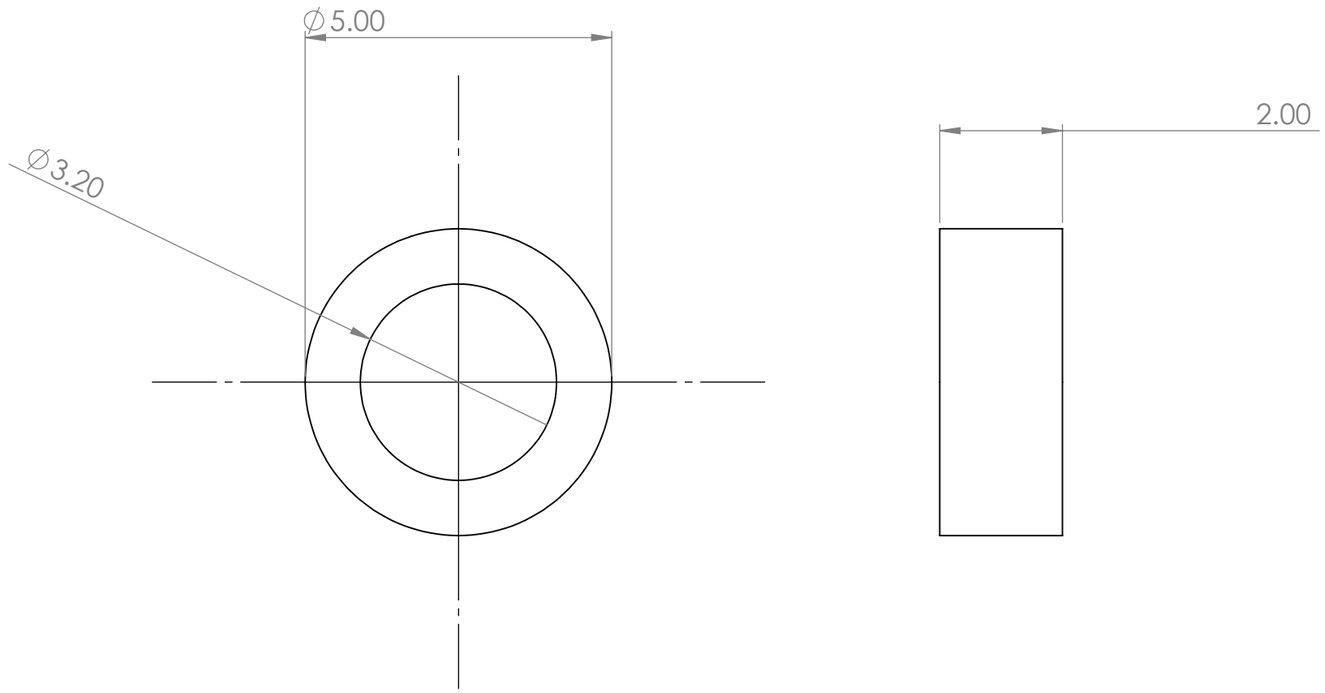

Note: material is POM (delrin)

Color does not matter

UNLESS OTHERWISE SPECIFIED: DIMENSIONS ARE IN MILLIMETERS SURFACE FINISH: TOLERANCES: LINEAR: +/- 0.1mm ANGULAR:	FINISH: Unfinished			DEBURR AND BREAK SHARP EDGES	DO NOT SCALE DRAWING	REVISION
	NAME	SIGNATURE	DATE		TITLE:	
DRAWN	bunnie					
CHK'D						
APPV'D						
MFG						
Q.A				MATERIAL: POM (Delrin)	DWG NO. iris-pom-spacer	A3
				WEIGHT:	SCALE:10:1	SHEET 1 OF 1