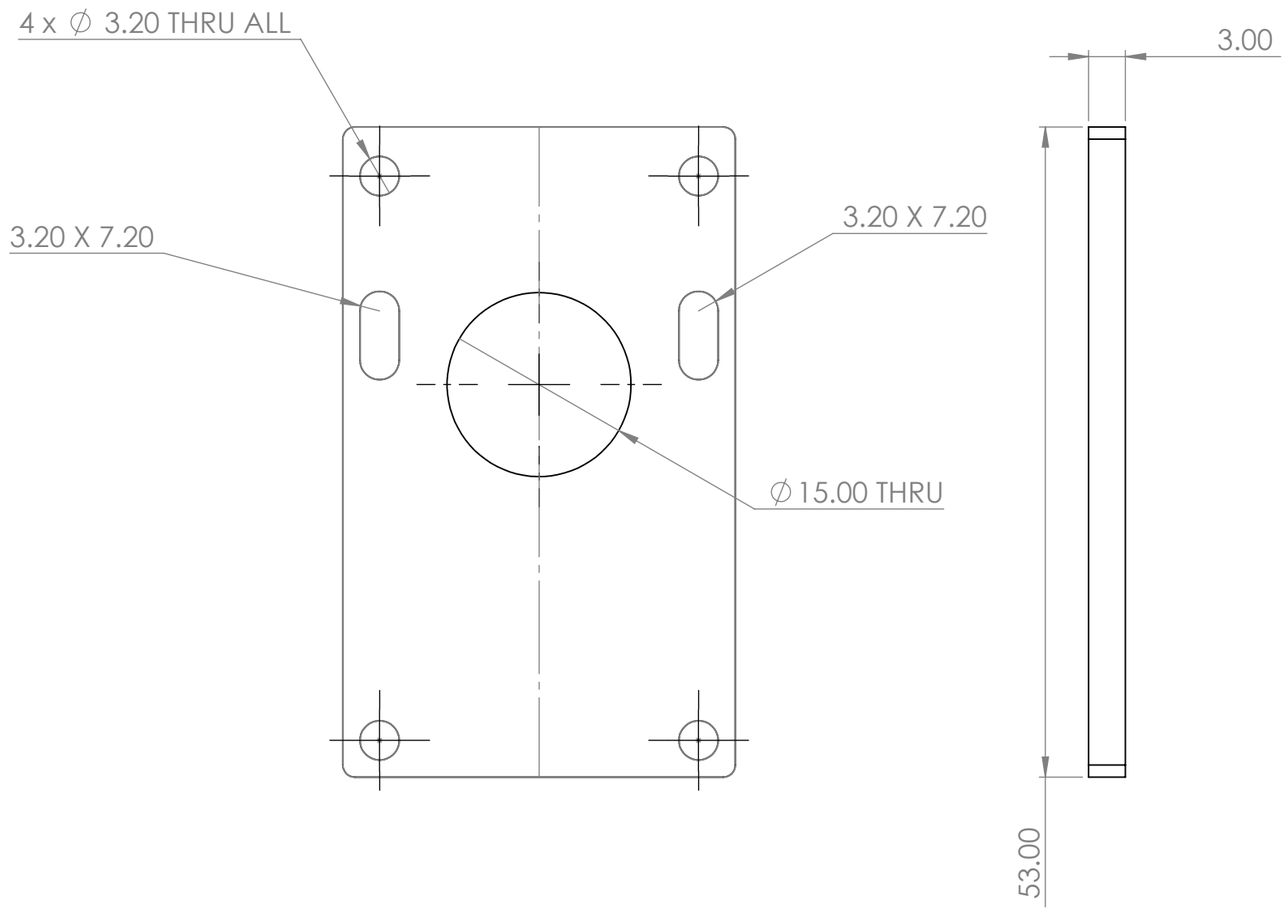

UNLESS OTHERWISE SPECIFIED: DIMENSIONS ARE IN MILLIMETERS SURFACE FINISH: TOLERANCES: LINEAR: +/- 0.1mm ANGULAR:	FINISH: Red Anodized Ra3.2 or better		DEBURR AND BREAK SHARP EDGES	DO NOT SCALE DRAWING	REVISION	
	NAME	SIGNATURE	DATE	TITLE:		
DRAWN	bunnie					
CHK'D						
APPV'D						
MFG						
Q.A				MATERIAL: 6061 Aluminum	DWG NO. iris-refplate	A3
				WEIGHT:	SCALE:2:1	SHEET 1 OF 1