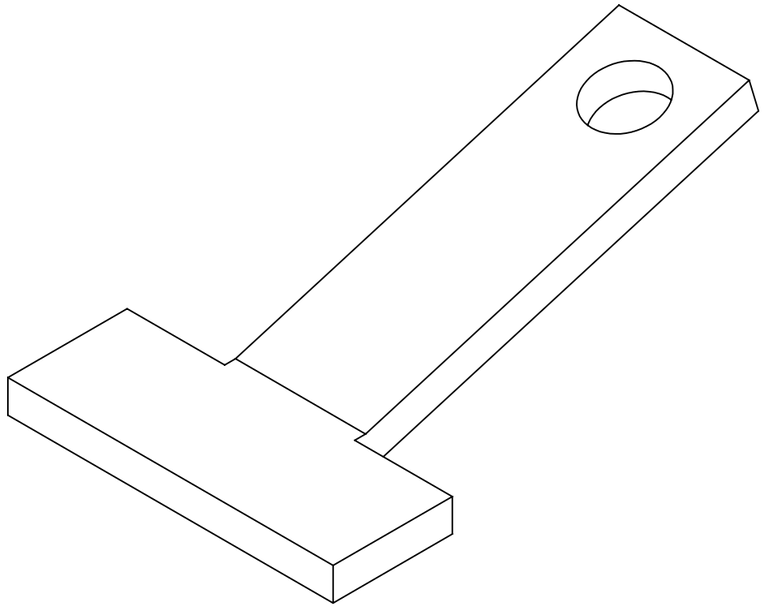

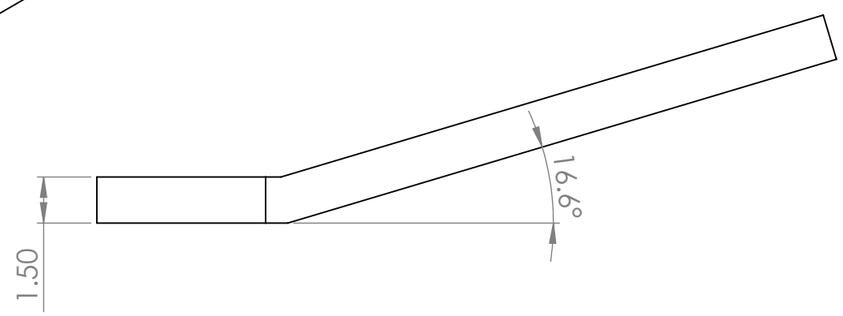

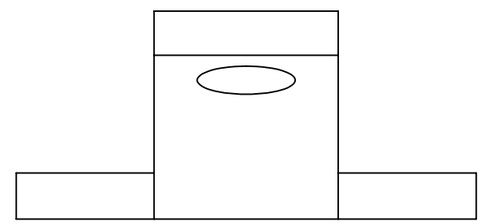

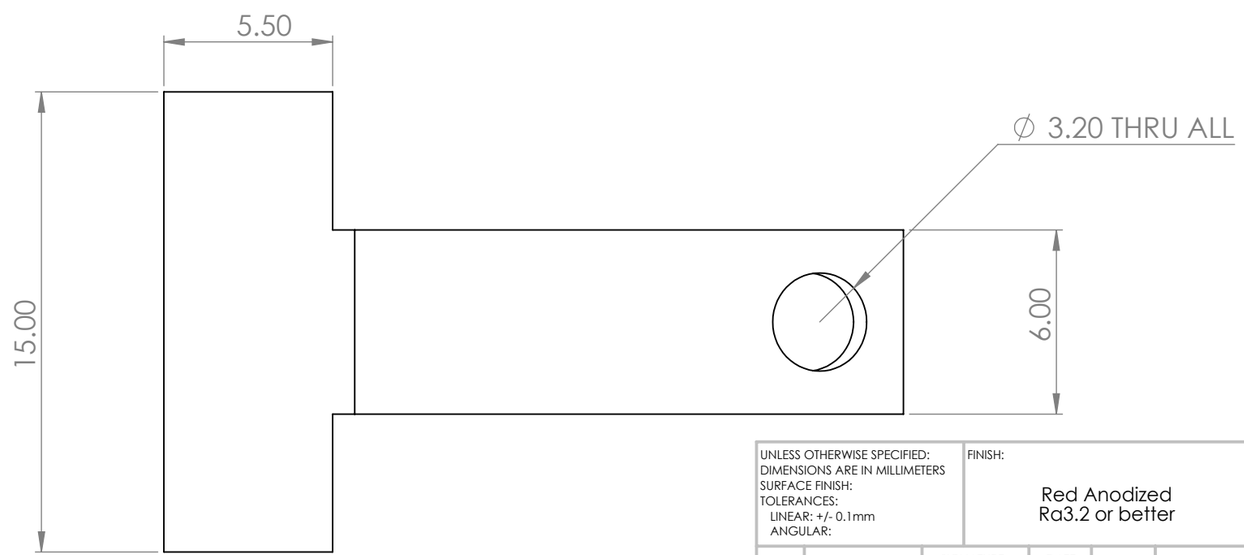

UNLESS OTHERWISE SPECIFIED: DIMENSIONS ARE IN MILLIMETERS SURFACE FINISH: TOLERANCES: LINEAR: +/- 0.1mm ANGULAR:	FINISH: Red Anodized Ra3.2 or better			DEBURR AND BREAK SHARP EDGES	DO NOT SCALE DRAWING	REVISION
	NAME	SIGNATURE	DATE		TITLE:	
DRAWN	bunnie					
CHK'D						
APPV'D						
MFG						
Q.A				MATERIAL: 6061 Aluminum	DWG NO. iris-endstop-actuator	A3
				WEIGHT:	SCALE:5:1	SHEET 1 OF 1