ELEC1103 – Semester 1

Lecture 1. Introduction

COMMONWEALTH OF AUSTRALIA

Copyright Regulations 1969

WARNING

This material has been reproduced and communicated to you by or on behalf of the **University of Sydney** pursuant to Part VB of the Copyright Act 1968 (the Act).

The material in this communication may be subject to copyright under the Act. Any further reproduction or communication of this material by you may be the subject of copyright protection under the Act.

Do not remove this notice

THE UNIVERSITY OF SYDNEY

Dr. Craig Jin

6 March 2014

COURSE LOGISTICS

Ch0. (i) Logistics

- Course Website – http://elearning.sydney.edu.au
- Staff – Craig Jin, Unit of Study coordinator,
  my lab website: http://www.ee.usyd.edu.au/carlab
  my office hours (Rm. 854, Weds. 4pm)
- Staff – Johnson Thie, Lab coordinator
- Unit of Study outline is online at the course website.
- Assessment:
  - Weekly Homework Problems 15%
  - Lecture Review Questions 5%
  - Lab Assignments 15%
  - Mid-Term Exam On-line (April 14-25, 2012) 5%
  - Final Exam 60%
  - Skills Challenge: Must be completed to pass the course

COURSE LOGISTICS

Ch0. (i) Logistics

Textbooks

- Electric Circuits by J. Nilsson and S. Riedel
- Introduction to Multisim by J. Nilsson and S. Riedel

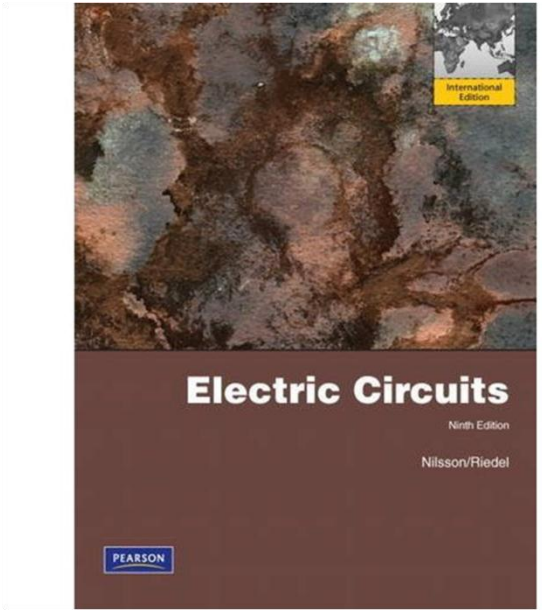

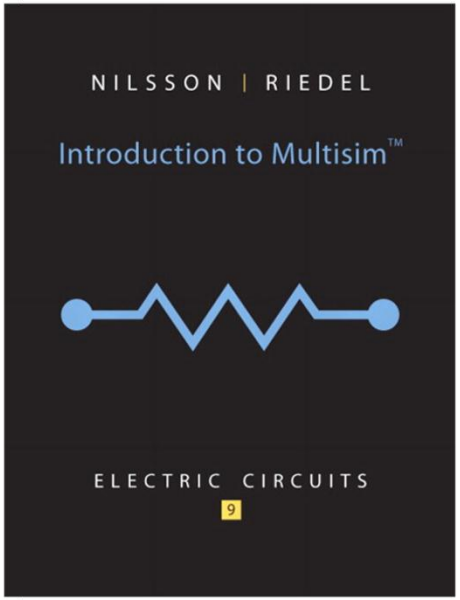

COURSE LOGISTICS

Ch0. (i) Logistics

- Lectures: Thurs. 3pm-5pm
  - You are expected to attend, but lectures will be recorded using the Lectopia system which provides voice recording with slide presentation.
- Weekly Homework (15%): The weekly homework will be performed online at Blackboard. The weekly homework must be completed by 11:59pm each Sunday.
- Lecture Review Questions (5%): The lecture review questions are mostly conceptual questions to go along with the lecture material. These questions should also be completed by 11:59pm each Sunday.
- Labs (15%): There will be a number of labs scheduled throughout the term. You are required to attend lab and do the lab work.

COURSE LOGISTICS

Ch0. (i) Logistics

› Summary for this Week:

- Lectures: Thursday (3pm-5pm)
- Tutorials: No tutorial this week, starts next week
- Labs: No lab this week, starts next week.
- Lecture review questions are available. Due Sunday March 9th at 11:59pm.

COURSE LOGISTICS

Ch0. (ii) Syllabus (Available Online)

- Wk 1: Circuit Variables
- Wk 2: Circuit Elements
- Wk 3: Simple Resistive Circuits
- Wk 4: Techniques of Circuit Analysis
- Wk 5: Techniques of Circuit Analysis
- Wk 6: Operational Amplifiers
- Wk 7: Capacitance, Inductance, Mutual Inductance
- Wk 8: Capacitance, Inductance, Mutual Inductance
- Wk 9: RL and RC Circuits
- Wk 10: Steady-state Sinusoidal Analysis

COURSE LOGISTICS

Ch0. (ii) Syllabus (Available Online)

- Wk 11: Steady-state Sinusoidal Analysis
- Wk 12: Review
- Wk 13: Left-Open

COURSE LOGISTICS

Ch0. (iii) Show Course Website and Mastering Engineering Website

- Video tutorials on Blackboard
- Video tutorials on Mastering Engineering
- Lectures recorded and posted online

COURSE PHILOSOPHY

Ch0. (iv) Philosophy: University, Science, and Engineering

› Why Universities?

- Efficient
- Breakthrough discoveries (today requires teams of people, more interdisciplinary)

› What kind of Knowledge is Science and Engineering?

- Not parables
- Different to performance, literature, history

› Model for Science:

- Observations (hard part)
- Predictions
- Actions and Experiments

COURSE PHILOSOPHY

Ch0. (iv) Philosophy: University, Science, and Engineering

› Your Generation

- More knowledgeable than any previous
- Has had the least opportunity to think and tinker
- Not enough real thinking and questioning, crammed full of information with no time to digest

› Why ELEC 1103 (good question – why are you here?) will it be of any use to me?

- What will you be doing in 4 years, 8 years, 12 years, 16 years?
- There will be knowledge that could change your life, but I can’t say what it is.

Ch1. I. Overview of Electrical Engineering

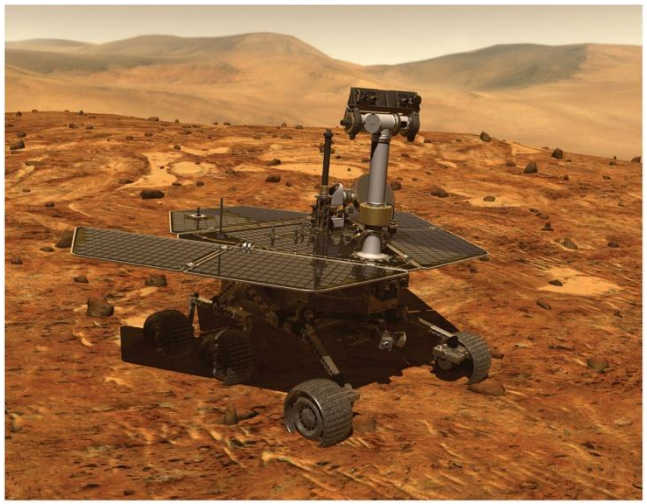

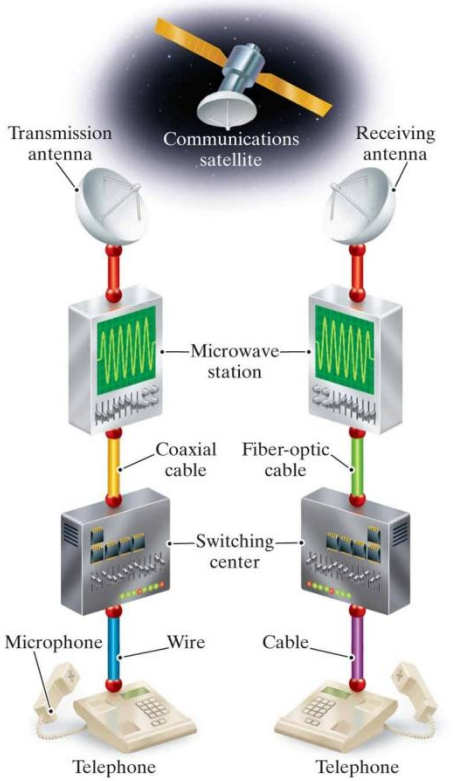

Copyright © 2011 Pearson Education, Inc. publishing as Prentice Hall

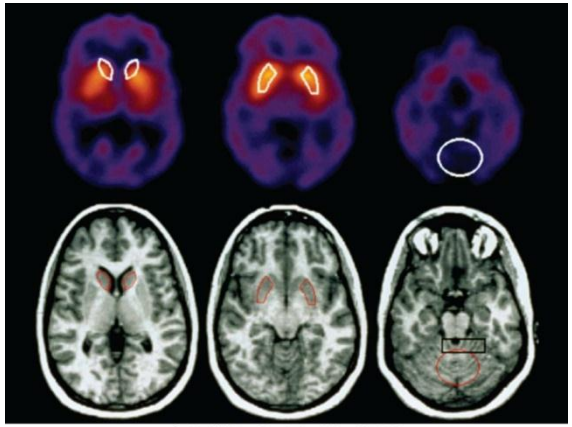

Copyright © 2011 Pearson Education, Inc. publishing as Prentice Hall

Copyright © 2011 Pearson Education, Inc. publishing as Prentice Hall

Ch1. II. Layers of Abstraction

- Layers of abstraction is the key in engineering to building more complicated systems.

Nature

V ,	I
0	0
0.5	0.2
1	0.4
1.5	0.8

Physics Laws

$V = IR$

Maxwell's Eqns

Lumped Circuits

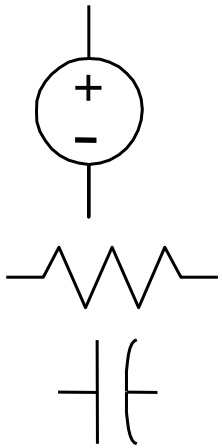

Amplifiers

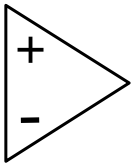

Ch1. II. Layers of Abstraction

Amplifiers

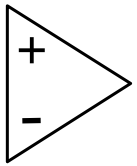

Digital

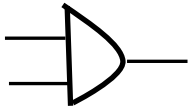

Combinational Logic

Clocked Systems

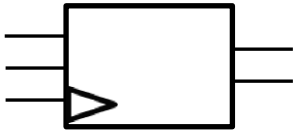

Instruction Set Architecture

Arm, x86

Analog

Ch1. II. Layers of Abstraction

Amplifiers

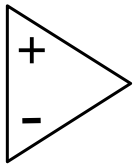

Instruction Set Architecture

Arm, x86

Programming Languages

Python, Java
C, C++

Software Systems

Linux,
Windows

Op-Amp

Analog System Components

Oscillators, filters,
RF transmitters

Analog Systems

Neuromorphic?

BASIC PHYSICS

Ch1. III. Basic Physics

- What is the difference between Physical Dimensions and Units ?
- Dimensions are a physical attribute of something that exists in the world.
- We create units when we want to count something. All measurements made in science and engineering, no matter how complicated, are counting something.

Ch1. III. Basic Physics

› Dimensional Units

In science and engineering, all measurements have units.

Everyone uses the SI units, which has 7 basic units.

International System of Units (SI)

SI base units

The SI is founded on seven *SI base units* for seven *base quantities* assumed to be mutually independent, as given in Table 1.

Table 1. SI base units

	SI base unit	
Base quantity	**Name**	**Symbol**
length	meter	m
mass	kilogram	kg
time	second	s
electric current	ampere	A
thermodynamic temperature	kelvin	K
amount of substance	mole	mol
luminous intensity	candela	cd

Ch1. III. Basic Physics

› Dimensional Units

Definitions of the SI base units

Unit of length	**meter**	The meter is the length of the path travelled by light in vacuum during a time interval of 1/299 792 458 of a second.
Unit of mass	**kilogram**	The kilogram is the unit of mass; it is equal to the mass of the international prototype of the kilogram.
Unit of time	**second**	The second is the duration of 9 192 631 770 periods of the radiation corresponding to the transition between the two hyperfine levels of the ground state of the cesium 133 atom.
Unit of electric current	**ampere**	The ampere is that constant current which, if maintained in two straight parallel conductors of infinite length, of negligible circular cross-section, and placed 1 meter apart in vacuum, would produce between these conductors a force equal to 2×10^{-7} newton per meter of length.
Unit of thermodynamic temperature	**kelvin**	The kelvin, unit of thermodynamic temperature, is the fraction 1/273.16 of the thermodynamic temperature of the triple point of water.
Unit of amount of substance	**mole**	1. The mole is the amount of substance of a system which contains as many elementary entities as there are atoms in 0.012 kilogram of carbon 12; its symbol is "mol."

Ch1. III. Basic Physics

- Question: Degrees and Radians are measures of angle and are dimensionless because they use natural or relative units. Try to recall what is a radian. The question asked is what is special about radians?
- Possible Answers:

(A) Since both are dimensionless, there really is nothing special about radians.

(B) Lim x->0 cos(x) - 1 = 0.

(C) Lim x->0 sin(x)/x = 1.

(D) d/dx sin(x) = cos(x)

Ch1. III. Basic Physics

› Derived Units are made from the 7 basic units.

power, radiant flux	watt	W	J/s	$m^2 \cdot kg \cdot s^{-3}$
electric charge, quantity of electricity	coulomb	C	-	$s \cdot A$
electric potential difference, electromotive force	volt	V	W/A	$m^2 \cdot kg \cdot s^{-3} \cdot A^{-1}$
capacitance	farad	F	C/V	$m^{-2} \cdot kg^{-1} \cdot s^4 \cdot A^2$
electric resistance	ohm	Ω	V/A	$m^2 \cdot kg \cdot s^{-3} \cdot A^{-2}$
electric conductance	siemens	S	A/V	$m^{-2} \cdot kg^{-1} \cdot s^3 \cdot A^2$
magnetic flux	weber	Wb	V·s	$m^2 \cdot kg \cdot s^{-2} \cdot A^{-1}$
magnetic flux density	tesla	T	Wb/m^2	$kg \cdot s^{-2} \cdot A^{-1}$
inductance	henry	H	Wb/A	$m^2 \cdot kg \cdot s^{-2} \cdot A^{-2}$

Ch1. III. Basic Physics

- Electrical Engineers have created too many units – if you keep giving a new name to everything, you don't keep track of anything.
- My simple units:
  - Magnetic Field Intensity H = A/m
  - Magnetic Flux Density B = N/(Am)
  - Magnetic Vector Potential A_{vec} = N/A
  - Electric Field Intensity E = V/m
  - Electric Flux Density D = C/(m^2)
  - μ_0 = N/A^2
  - ε_0 = C/(Vm)
  - A = C/s
  - V = Nm/C
  - Joule = Nm

$$B = \mu H$$

$$D = \varepsilon E$$

Ch1. III. Basic Physics

› Powers of Ten:

Factor	Name	Symbol	Factor	Name	Symbol
10^{24}	yotta	Y	10^{-1}	deci	d
10^{21}	zetta	Z	10^{-2}	centi	c
10^{18}	exa	E	10^{-3}	milli	m
10^{15}	peta	P	10^{-6}	micro	μ
10^{12}	tera	T	10^{-9}	nano	n
10^{9}	giga	G	10^{-12}	pico	p
10^{6}	mega	M	10^{-15}	femto	f
10^{3}	kilo	k	10^{-18}	atto	a
10^{2}	hecto	h	10^{-21}	zepto	z
10^{1}	deka	da	10^{-24}	yocto	y

Ch1. III. Basic Physics

› Electric Charge

- Electrical charge is either positive or negative.
- Electrical charge is quantized: integral multiples of to 1.602×10^{-19} Coulombs
- Unit of charge is the Coulomb (C) (and –1 C = charge on 6.24×10^{18} electrons)
- Electrical charge creates electric fields
- Review Java Physics tutorial on Electric Charge on the course website.
- http://www.youtube.com/watch?feature=player_detailpage&v=p4wjAr0ABao

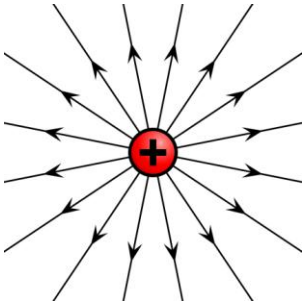

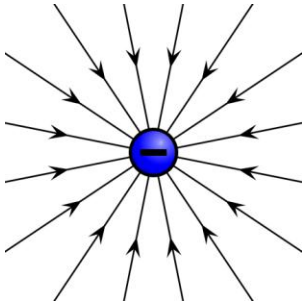

BASIC PHYSICS

Ch1. III. Basic Physics

- Where do we get electrons from?
- 1. Power Generation: http://www.youtube.com/watch?v=ATFqX2Cl3-w

Ch1. III. Basic Physics

› Where do we get electrons from?

› 2. Batteries:

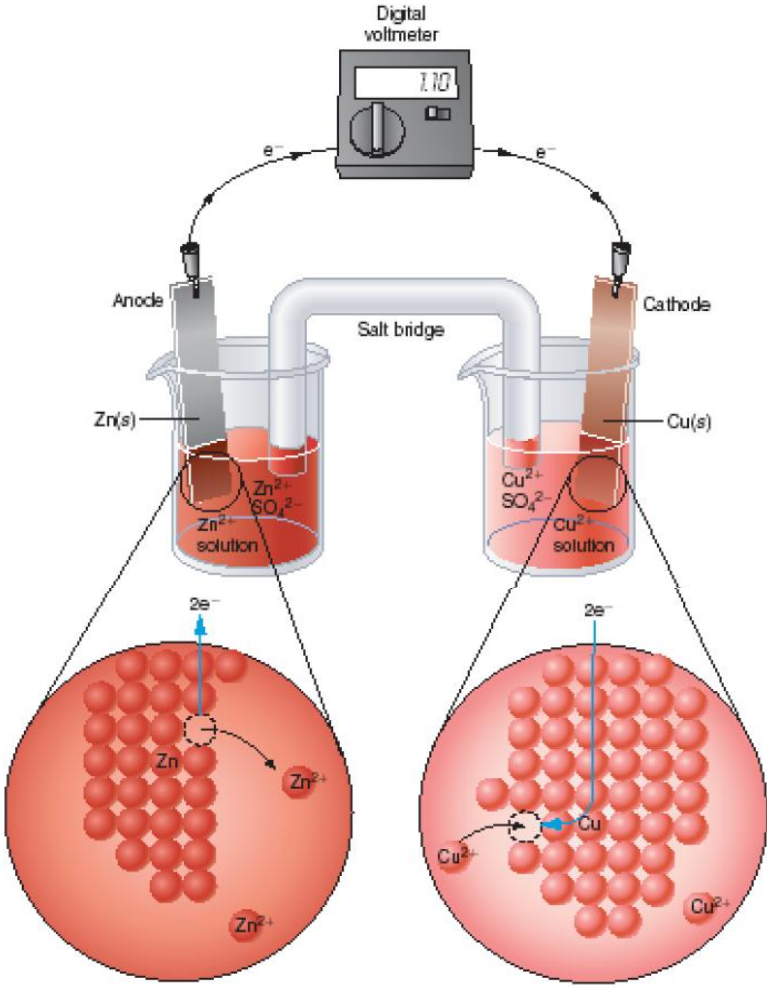

Ch1. III. Basic Physics

› Question: What is the purpose of the KNO_3 Salt bridge?

› Possible Answers:

(A) Adds K^+ to Cu solution and NO_3^- to the Zn solution.

(B) Adds K^+ to Zn solution and NO_3^- to the Cu solution.

(C) Just a buffer for the solutions to maintain pH.

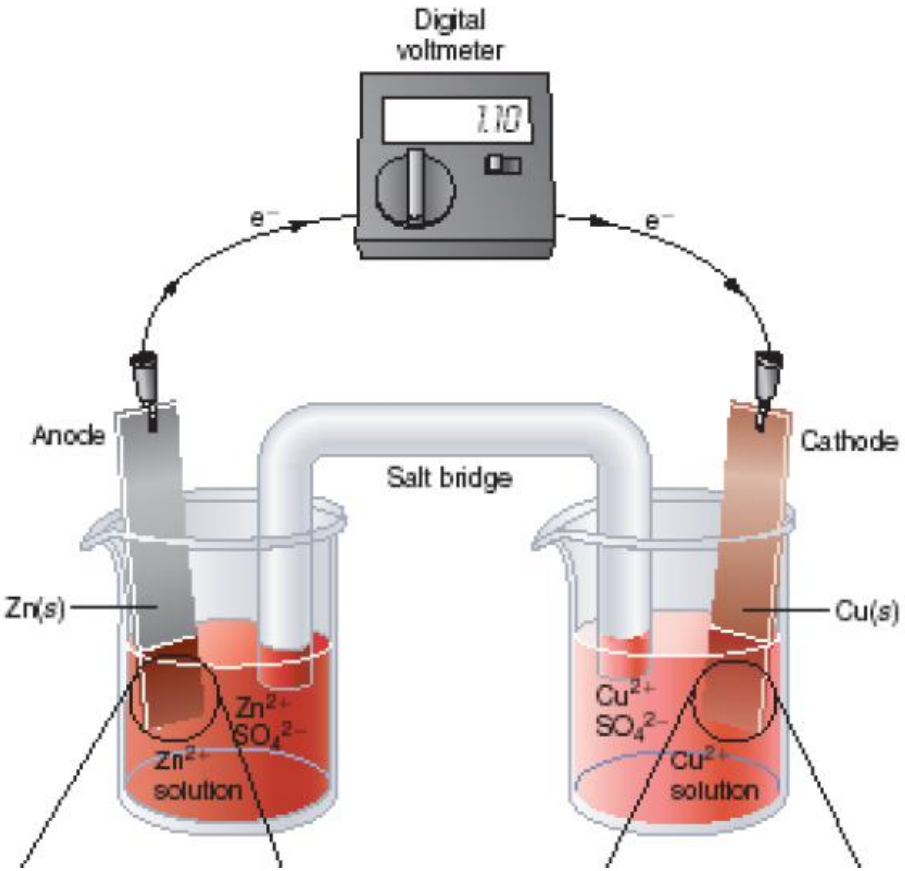

Ch1. III. Basic Physics

› Question: What is the purpose of the KNO_3 Salt bridge?

› Answer:

(A) Adds K^+ to Cu solution and NO_3^- to the Zn solution.

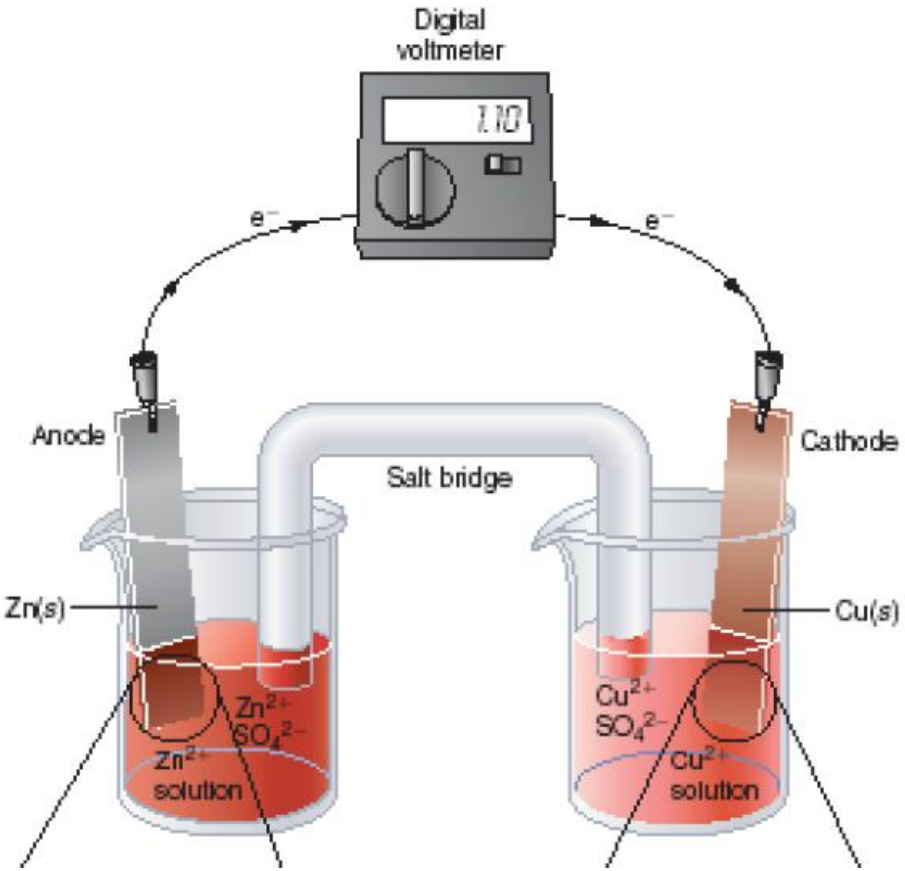

Ch1. III. Basic Physics

- Where do we get electrons from?
- 3. Van de Graaf Generator
- http://www.magnet.fsu.edu/education/tutorials/java/vandegraaff/

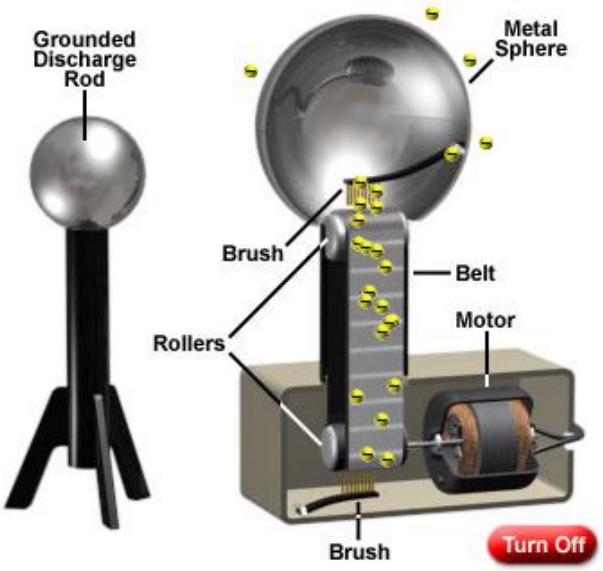

Ch1. III. Basic Physics

› Electric Fields

- Intuition: You can think of electrical fields similarly to gravitational fields, except there is positive and negative charge compared to only positive mass

› Electric Force

- F = qE compared to F = mg

Ch1. III. Basic Physics

› Electrical Potential

- Similar to gravitational potential, there is an electrical potential.

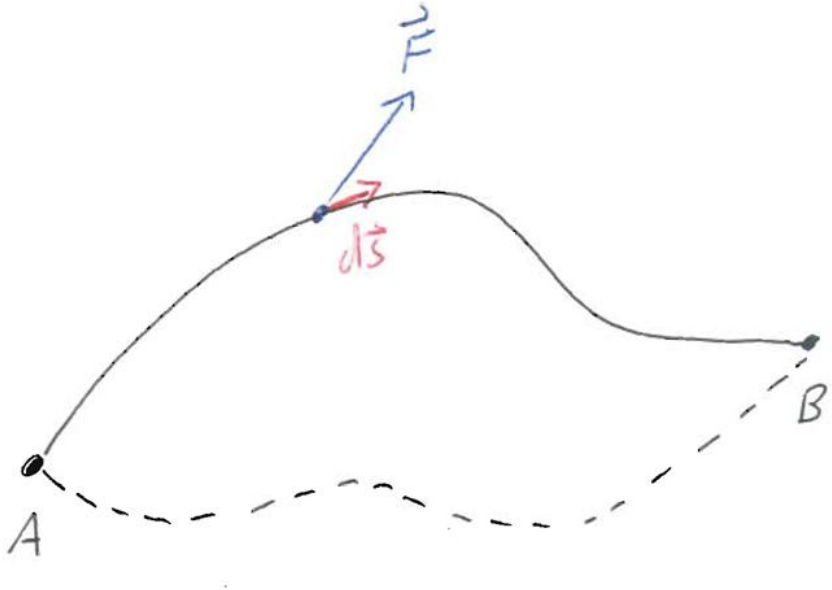

The work done in moving a unit of positive charge from point A to point B is the electrical potential or voltage between point A and point B. It is the work done against the electric field.

Ch1. III. Basic Physics

› Volt Definition:

- Two points have a voltage difference of one volt if one coulomb of charge gains (or loses) one joule of energy when it moves from one point to the other.

DIMENSIONALLY VOLT IS A DERIVED UNIT

$$\text{VOLT} = \frac{\text{JOULE}}{\text{COULOMB}} = \frac{N \bullet m}{C}$$

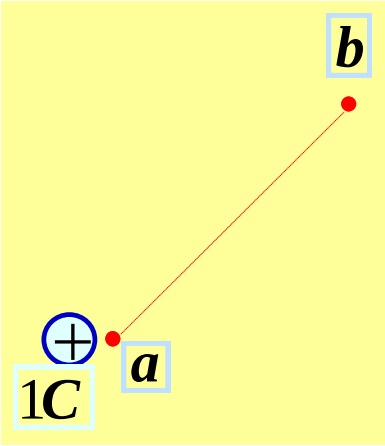

IF THE CHARGE GAINS ENERGY MOVING FROM a TO b THEN b HAS HIGHER VOLTAGE THAN a.
IF IT LOSES ENERGY THEN b HAS LOWER VOLTAGE THAN a

Voltage is always measured in relative form as the voltage difference between two points.

Ch1. III. Basic Physics (Voltage)

WRONG

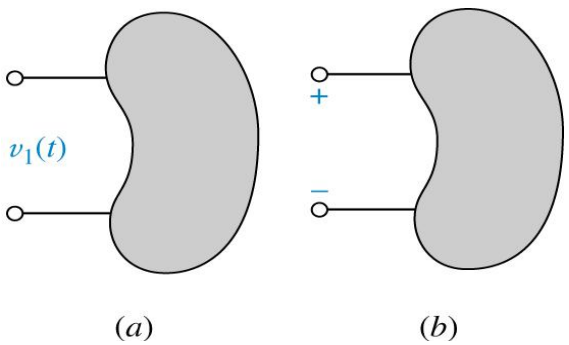

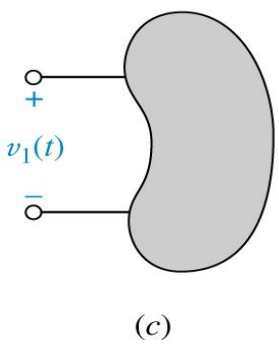

RIGHT

(a, b) These are inadequate definitions of a voltage. (c) A correct definition includes both a symbol for the variable and a plus-minus symbol pair.

B > A

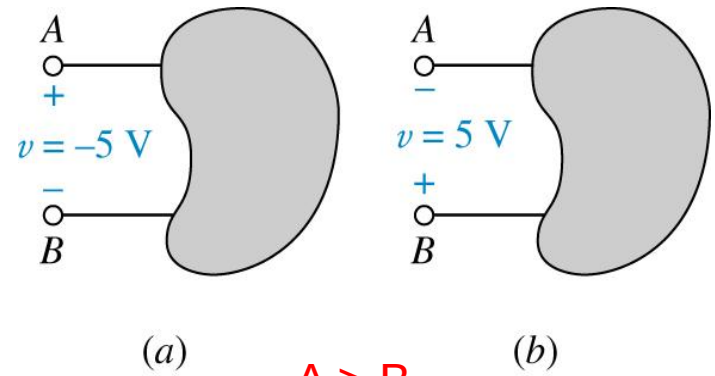

A > B

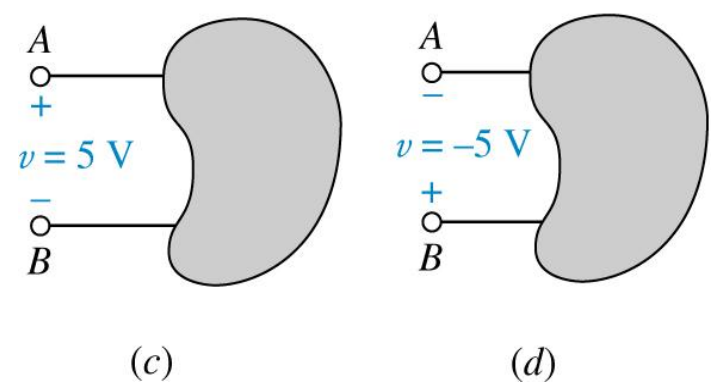

(a, b) Terminal B is 5 V positive with respect to terminal A; (c,d) terminal A is 5 V positive with respect to terminal B.

Ch1. III. Basic Physics

› Two-Index notation for Voltages:

- The first subindex denotes the positive polarity reference and the second index denotes the negative polarity reference.

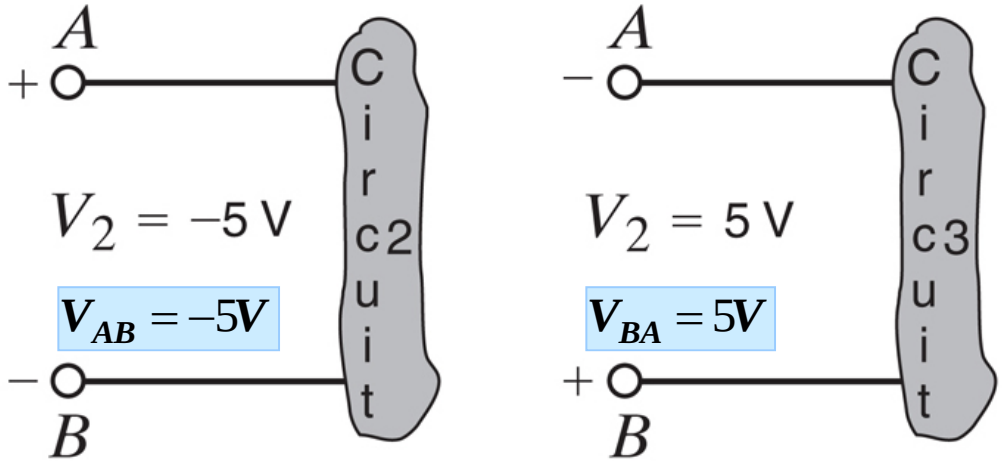

$V_{AB} = -V_{BA}$

$v_{ab} > 0$ means the potential of a is higher than potential of b.

$v_{ab} < 0$ means the potential of a is lower than potential of b.

Ch1. III. Basic Physics

› Current

- Current is the flow of electric charge.

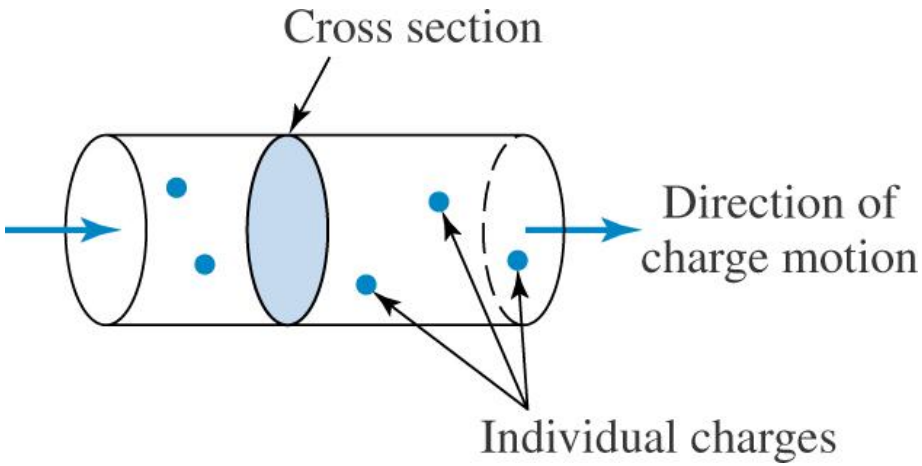

$$i = \frac{dq}{dt}$$

Ch1. III. Basic Physics

› Current

- A physical analogy for electric current is water flow. Charges are analogous to water particles.

Ch1. III. Basic Physics

› Current

- Although we know that current in metal is conducted by electrons, it is a universally adopted convention (starting with Benjamin Franklin) that the direction of positive current is in the direction of positive charge flow.

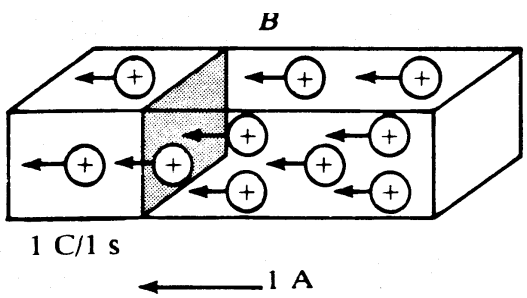

Positive ions

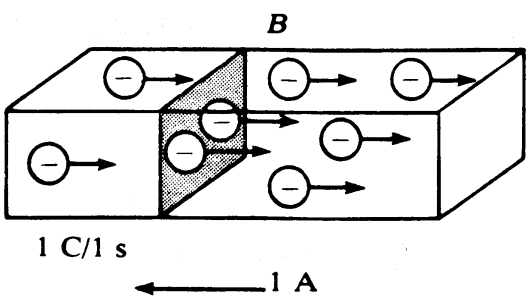

Negative ions

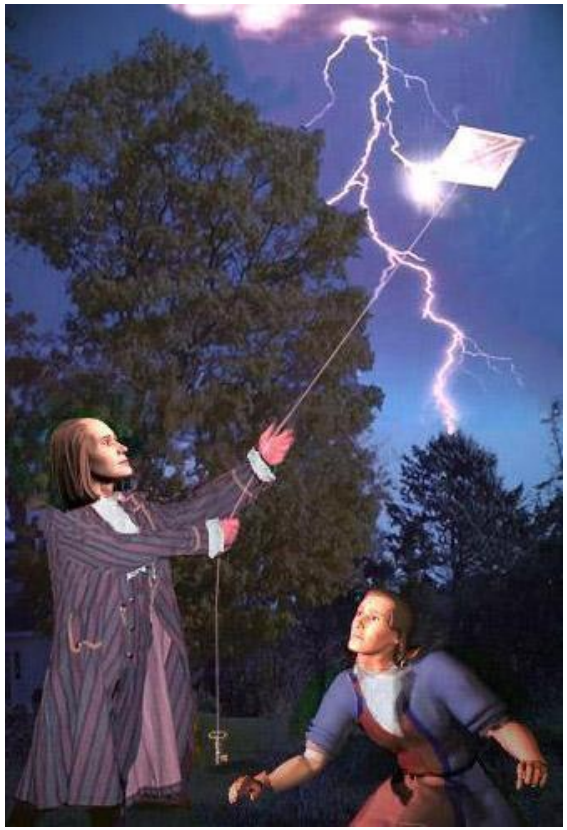

Ch1. III. Basic Physics

› Current must have a reference direction.

Two different methods of labeling the same current.

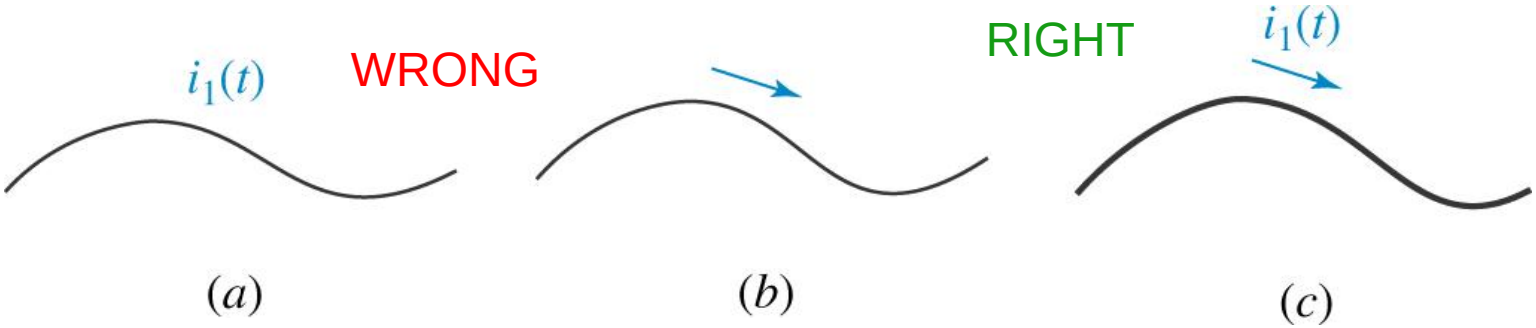

(a,b) Incomplete, improper, and incorrect definitions of a current. (c) the correct definition of $i_1(t)$.

Ch1. III. Basic Physics

› Two-Index notation for Current:

- Current flows from the first subindex to the second subindex.

$$I_{ab} = 5A$$

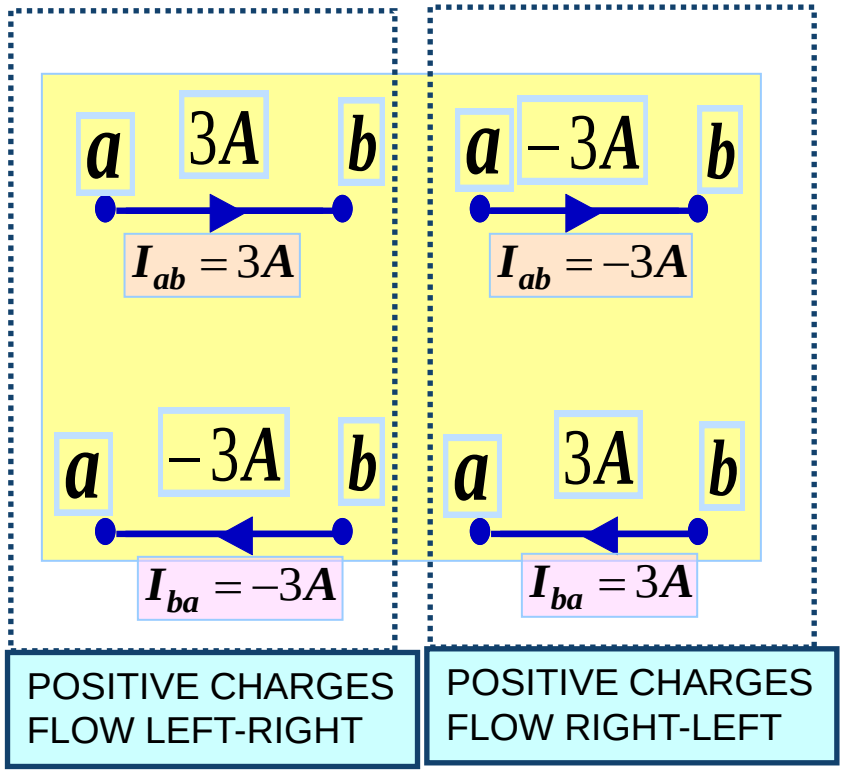

$$I_{ab} = -I_{ba}$$

Ch1. III. Basic Physics

› Direct current and Alternating current:

- A current that is constant in time is called a direct current (dc)
- A current that varies with time, reversing direction periodically, is called alternating current (ac)

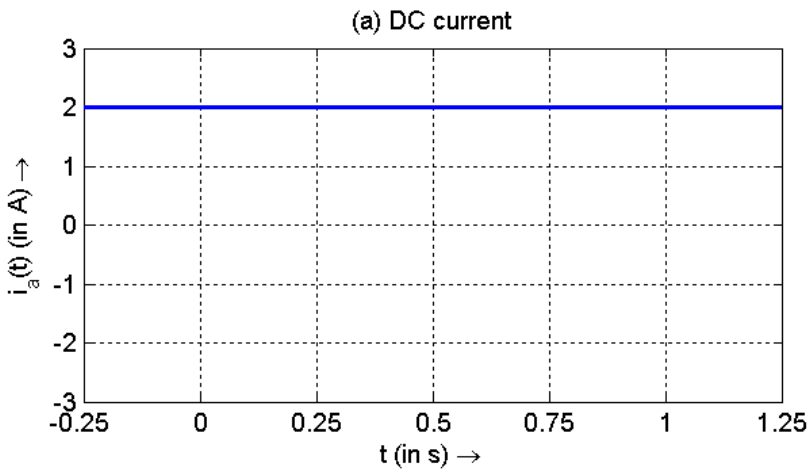

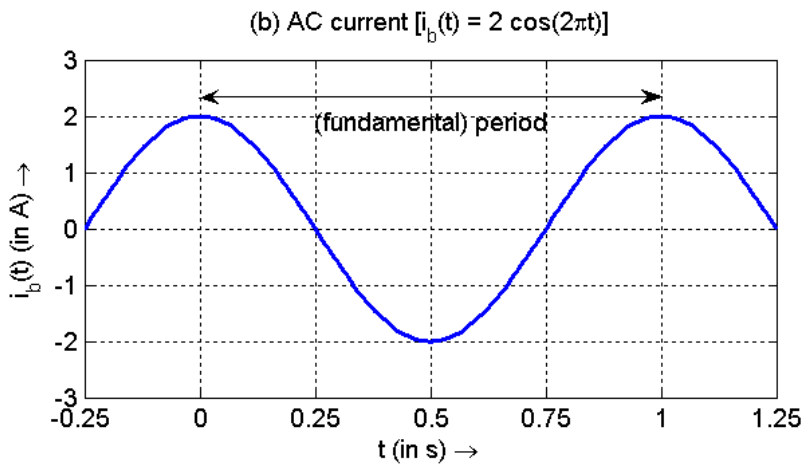

Ch1. III. Basic Physics

› Alternating current:

$$\boxed{\text{frequency} = \frac{1}{\text{period}}}$$

$$\text{here frequency} = \frac{1}{1\ \text{s}} = 1\ \text{Hz}$$

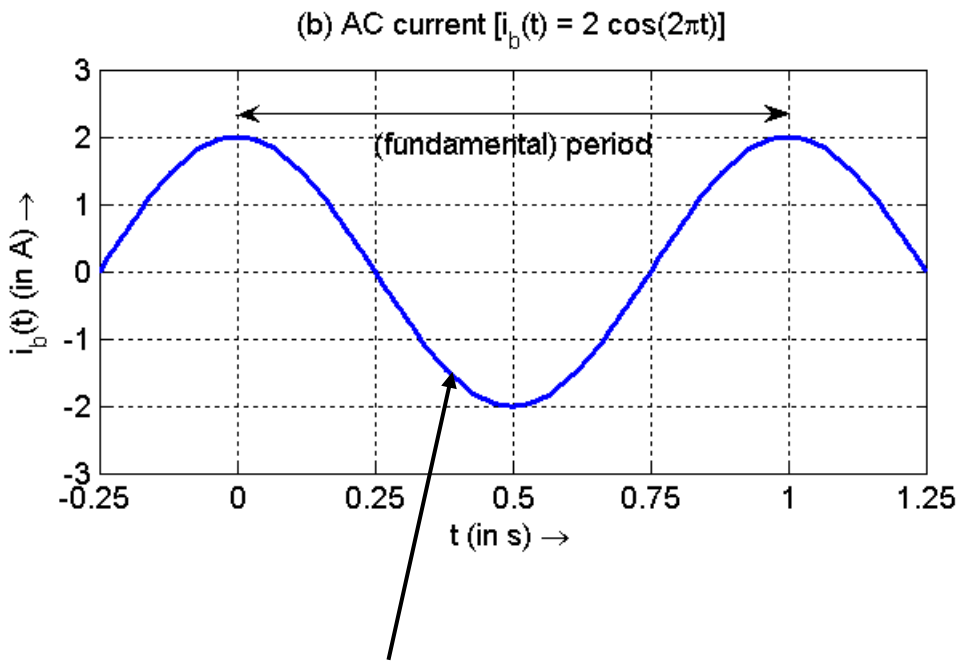

(note that at this time the actual current direction is opposite to the reference direction)

Sinusoidal ac current and voltages are studied later in the semester

Ch1. III. Basic Physics

› AC waveforms can be other shapes such as triangular and square waves.

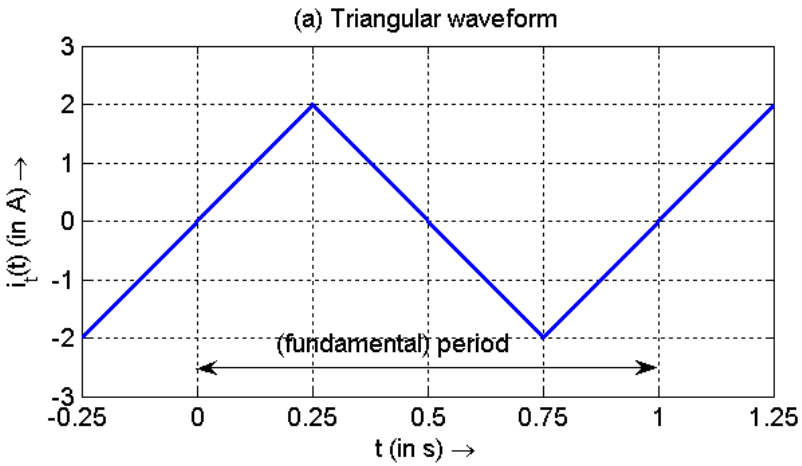

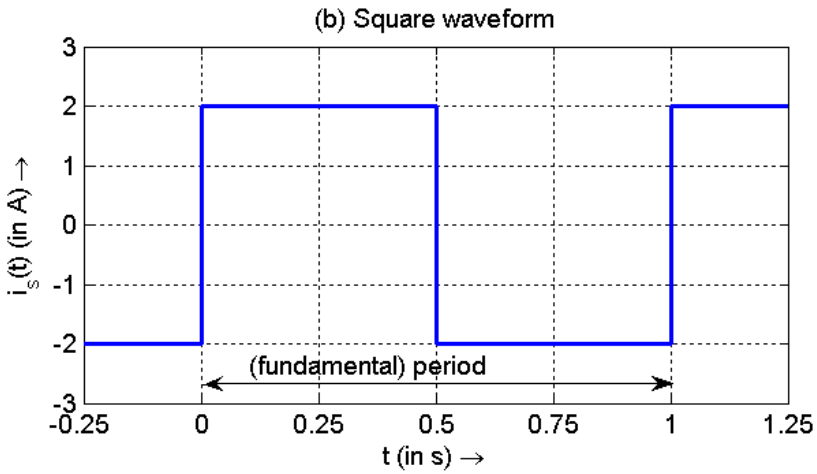

› AC waveforms can have a dc offset.

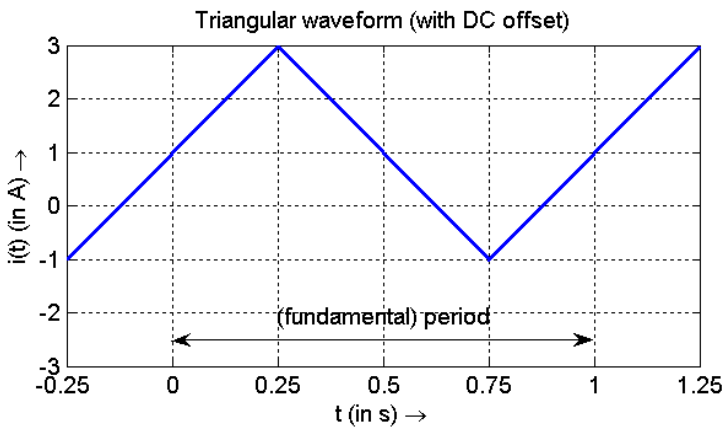

All waveforms here have a fundamental frequency $= \dfrac{1}{1\text{ s}} = 1\text{ Hz}$

Ch1. III. Basic Physics

› Fourier Series: Any periodic waveform can be expressed as a sum of sinusoids having frequencies that are multiples of the fundamental frequency of the waveform plus possible a dc component. Fourier series are covered in second year and form the basis of frequency response methods.

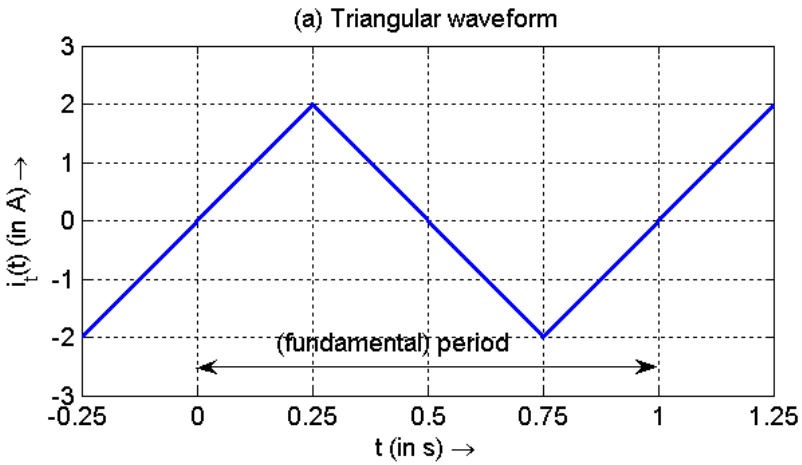

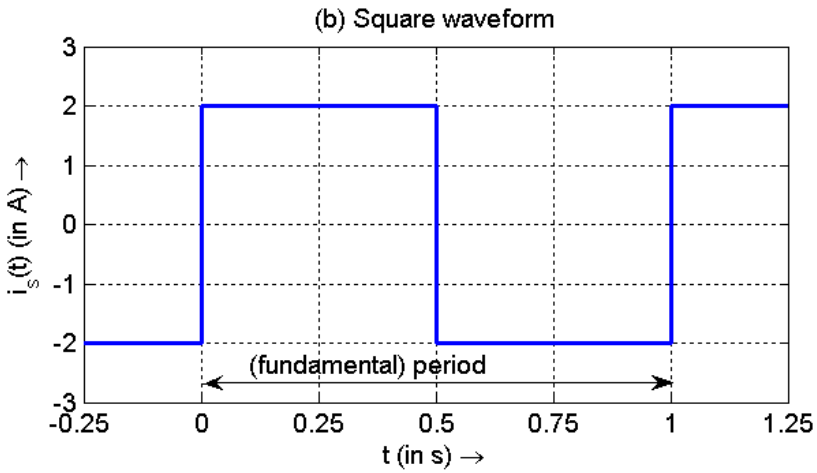

Ch1. IV. Circuit Theory

› Circuit Theory versus Electromagnetic Field Theory:

- Given three assumptions we can use circuit theory instead of electromagnetic field theory.
  - Assumption 1: Lumped-parameter system – If the size of discrete circuit components is less than 1/10 of the relevant wavelength (Recall $\lambda f=c$), then we say the system is a lumped-parameter system.
  - Assumption 2: The net charge on every component in the system is zero.
  - Assumption 3: There is no magnetic coupling between components in the system. Note that there can be magnetic coupling within a single component.

Ch1. IV. Circuit Theory

- What is the lumped-parameter approximation all about anyway?
- We should think of all electric circuits as transmission lines.
- Transmission lines carry power from a generator to a load, but the electric power can be in the form of Voltages and Currents or in the form of Electric and Magnetic fields.

Ch1. IV. Circuit Theory

- Understanding Transmission Lines
- Moving charges generate an magnetic field.
- http://www.youtube.com/watch?v=D8EW448jPzs

Ch1. IV. Circuit Theory

› Understanding Transmission Lines

› Accelerating charges generate Electric and Magnetic Fields.

$$\boldsymbol{E} = \frac{-q}{4\pi\epsilon_0}\left[\frac{\boldsymbol{e}_{r'}}{r'^2} + \frac{r'}{c}\frac{d}{dt}\left(\frac{\boldsymbol{e}_{r'}}{r'^2}\right) + \frac{1}{c^2}\frac{d^2}{dt^2}\boldsymbol{e}_{r'}\right]$$

$$\boldsymbol{B} = -\boldsymbol{e}_{r'} \times \boldsymbol{E}/c.$$

Ch1. IV. Circuit Theory

› Question

› A radio/television station is due North. How should you go about orienting your antenna to receive the signal?

(A) Point the antenna due North toward the station.

(B) Point the antenna East-West.

(C) Point the antenna vertically.

Ch1. IV. Circuit Theory

- Question
- A radio/television station is due North. How should you go about orienting your antenna to receive the signal?
- Answer

Both B and C are half correct. The antenna has to be perpendicular to the direction of the station, but then you must rotate the antenna to see what gives the best signal because you don't know the polarization of the signal.

Ch1. IV. Circuit Theory

- Understanding Transmission Lines
- Moving charges generate an magnetic field.
- http://www.youtube.com/watch?v=D8EW448jPzs
- Godfrey Magnetic/Electric Field Kink Concept (Accelerated Charges Radiate)

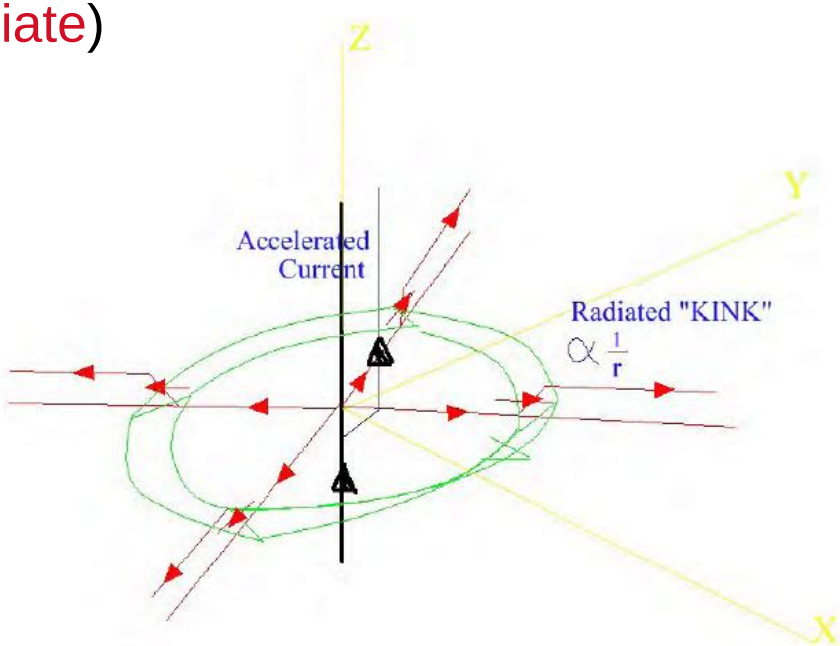

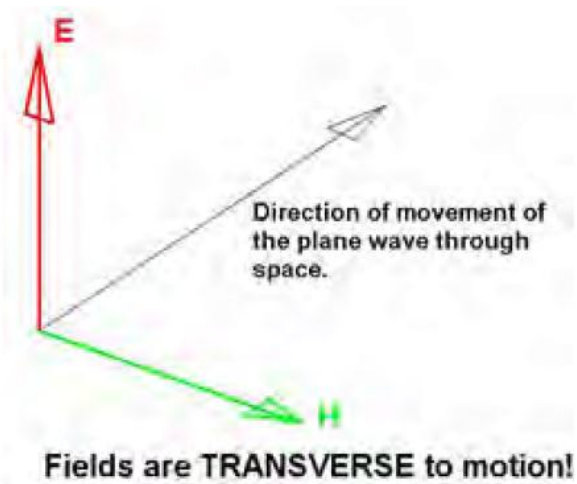

Ch1. IV. Circuit Theory

- Can we treat our electrical power system as a lumped-parameter system? It operates at 50 Hz and typical lengths may be tens of kilometers.

(A) No

(B) Yes

(C) Sometimes

Ch1. IV. Circuit Theory

› Understanding Transmission Lines

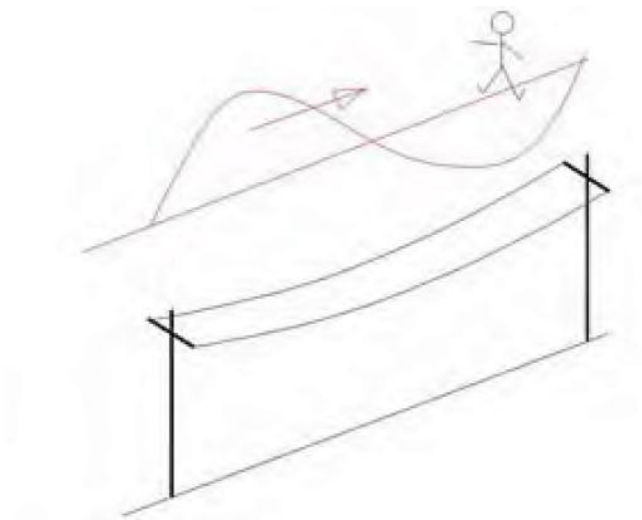

Frequency x Wavelength = Speed of Light = 3×10^8

Frequency	Wavelength
50 Hz	6000 km
50 kHz	6 km
50 MHz	6 m
500 MHz	0.6 m

Electronics versus RF Engineering

At low frequencies, the power is conveyed in voltages and currents, at high frequencies the power is conveyed in electromagnetic fields.

Lumped-Parameter Approx: circuit components less than 1/10 of the relevant wavelength (depends on frequency)

Ch1. IV. Circuit Theory (Basic Ingredients)

- The Ideal Circuit Element has three properties:
  - Only two terminals
  - Completely described by current and voltage
  - Cannot be subdivided

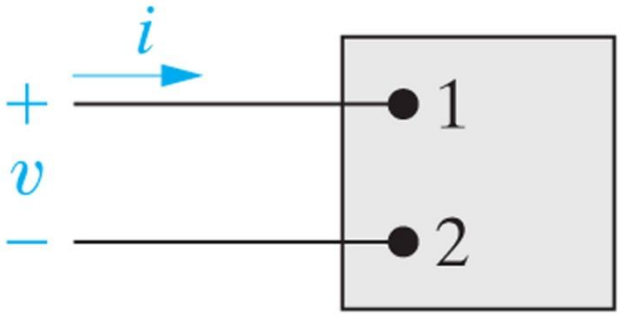

- The Ideal Wire: no energy is lost or gained when charges move.

Ch1. IV. Circuit Theory (Basic Ingredients)

› Power is work per unit time:

$$P = \frac{\text{Work}}{\text{Unit Time}} = \frac{\text{Work}}{\text{Unit Charge}} \cdot \frac{\text{Unit Charge}}{\text{Unit Time}}$$

$$P = \frac{\text{Work}}{\text{Unit Time}} = V \cdot I$$

Ch1. IV. Circuit Theory (Basic Ingredients)

- Passive Sign Convention:
  - For our basic circuit element, the reference polarity for voltage and reference direction for current is arbitrary. Therefore we use a passive sign convention, which says: When the reference direction for current in an element is in the direction of the reference voltage drop, we agree to use a positive sign to relate current and voltage.

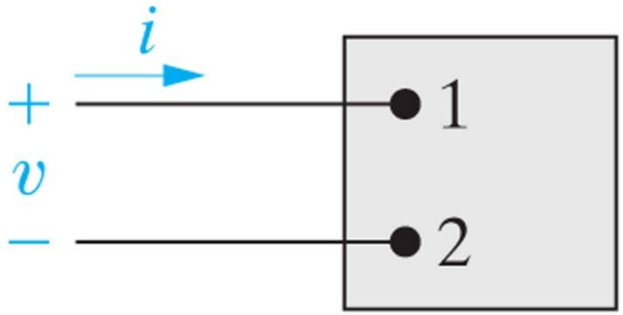

Ch1. IV. Circuit Theory (Basic Ingredients)

› Passive Sign Convention: What is the formula for power ?

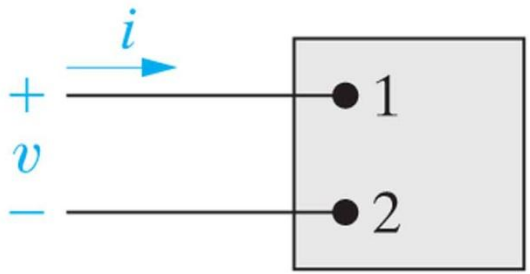

P = vi

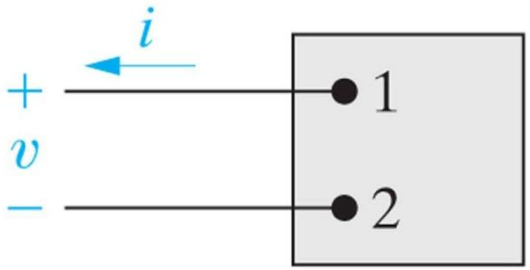

P = - vi

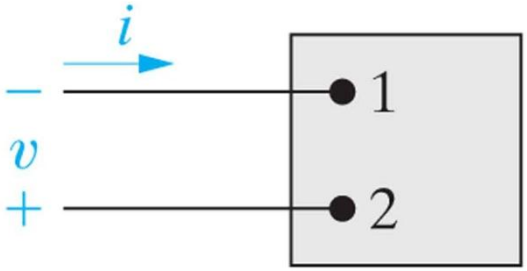

P = - vi

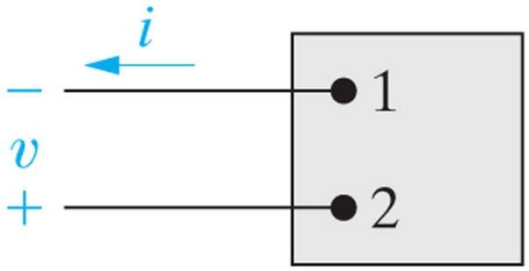

P = vi

Ch1. IV. Circuit Theory (Basic Ingredients)

- Passive Sign Convention:
  - When we use the passive sign convention, positive values for the power mean that the circuit element is absorbing power and negative values for the power mean that the circuit element is supplying power.
  - Physically, if current is going into the element it is absorbing power and if current is leaving the element it is supplying power.

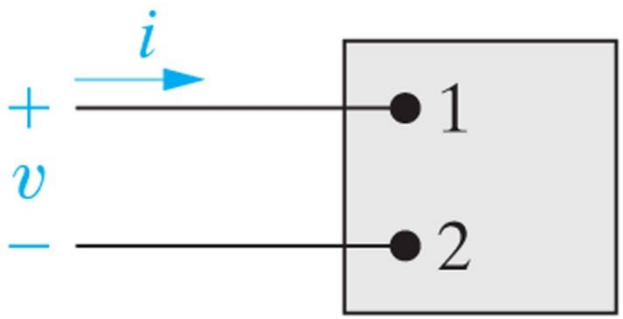

$P = VI > 0$ Circuit element is absorbing power.

$P = VI < 0$ Circuit element is delivering power.

Ch1. IV. Circuit Theory (Basic Ingredients)

› Which car is supplying power and which car is absorbing power ?

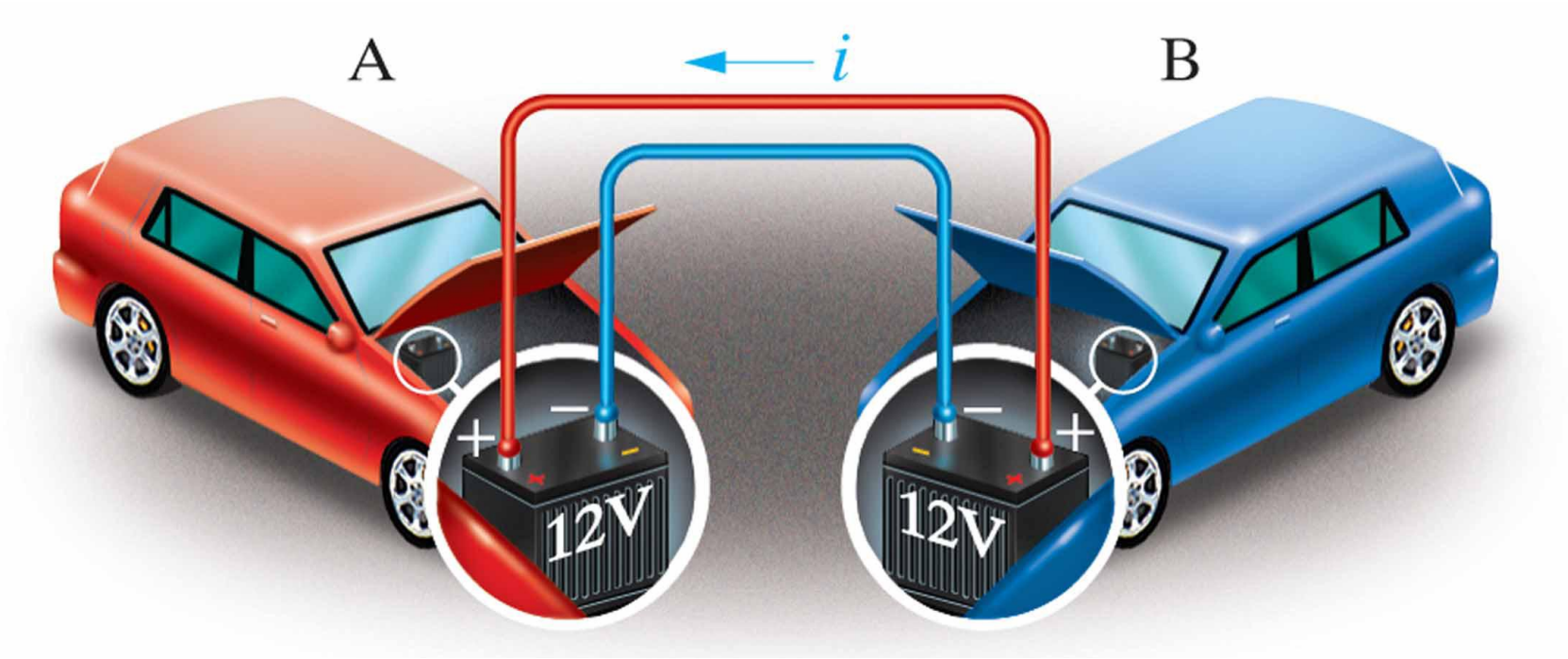

Ch1. IV. Circuit Theory (Basic Ingredients)

› Which car is supplying power and which car is absorbing power ?

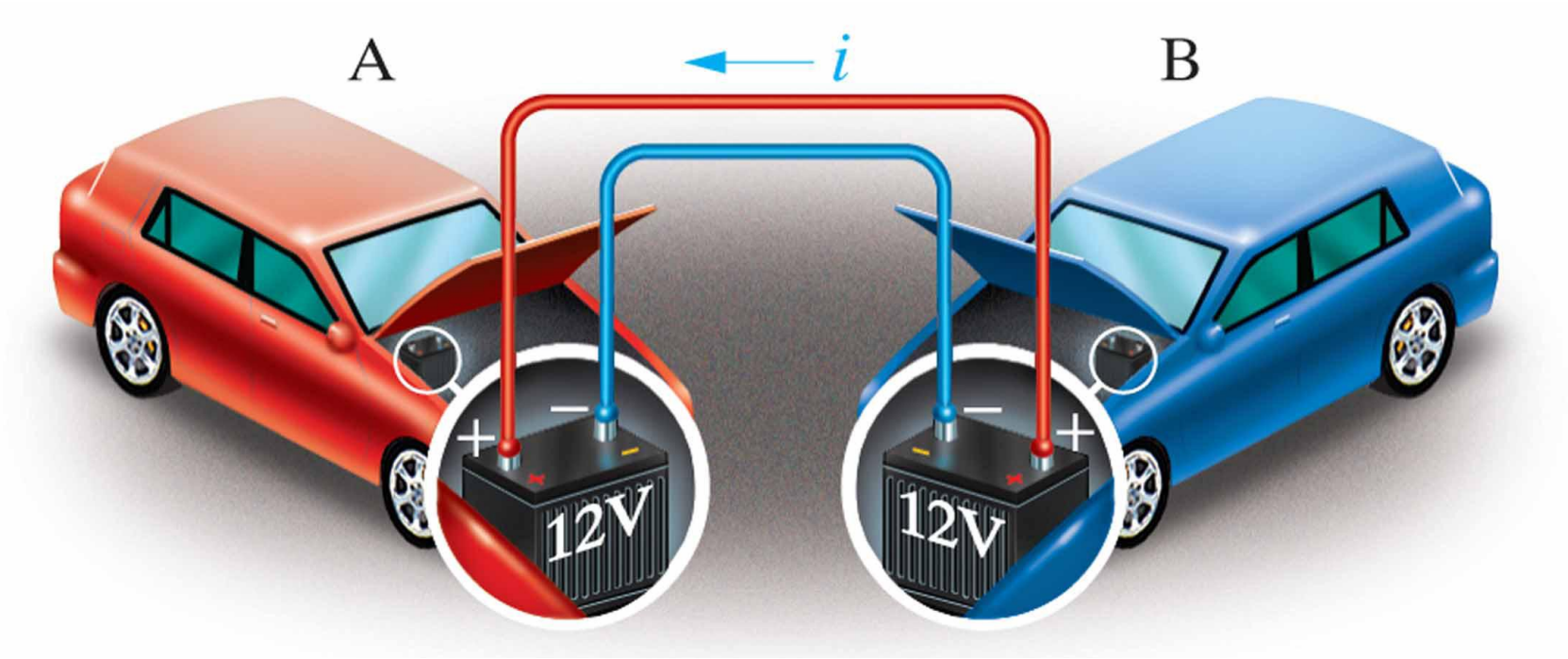

Car B supplies power because current is leaving the positive terminal.

Ch1. IV. Circuit Theory (Basic Ingredients)

› Compute the power absorbed or supplied by each circuit element?

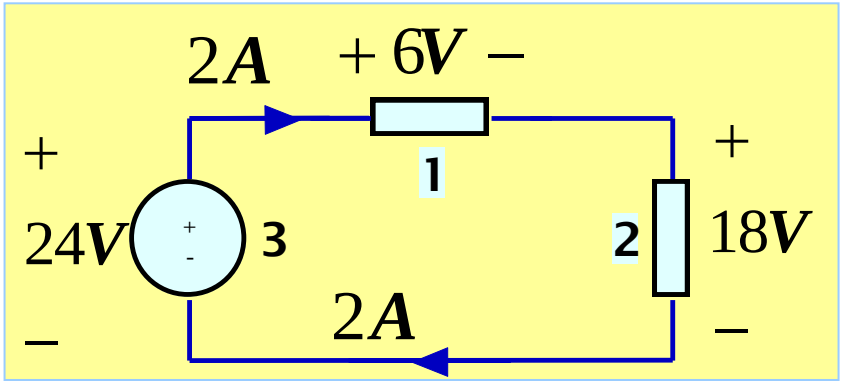

Ch1. IV. Circuit Theory (Basic Ingredients)

› Compute the power absorbed or supplied by each circuit element?

$$P_1 = (6V)(2A)$$

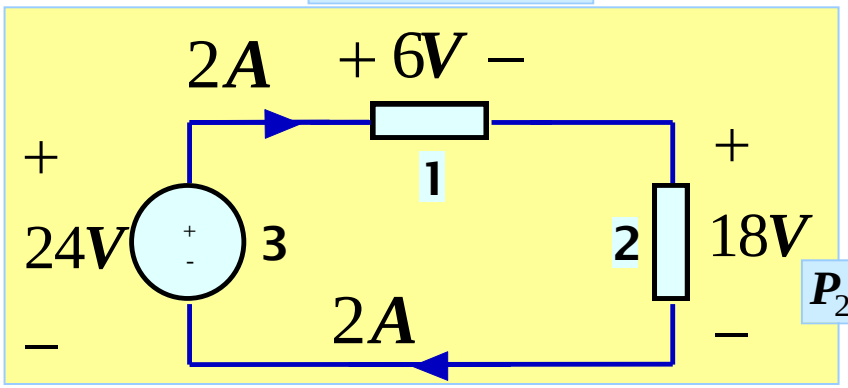

P1 = 12W
P2 = 36W
P3 = -48W

$$P_2 = (18V)(2A)$$

$$P_3 = (24V)(-2A) = (-24V)(2A)$$

IMPORTANT: NOTICE THE POWER BALANCE IN THE CIRCUIT. THE TOTAL POWER SUMS TO ZERO!

BASIC CIRCUIT ELEMENTS

Ch2. I. Ideal Basic Circuit Elements

› Five Ideal Basic Circuit Elements + Ideal Wire:

- Ideal Wire
- Ideal Resistor
- Ideal Current Source
- Ideal Voltage Source
- Ideal Capacitor
- Ideal Inductor

We will study these first.

› We will first study resistive networks, leaving capacitors and inductors for the second half of the semester because their operation is governed by differential equations.

Ch2. I. Ideal Basic Circuit Elements

› Ideal Wire:

- In an ideal wire, electrons can move freely without any change in energy. In a real wire there will be some resistance, but this resistance is usually negligible when designing or analysing the circuit.
- Voltage difference is a measure of energy difference between two points in a circuit. Because there can be no change in energy along an ideal wire, the entire wire must be at the same voltage.

Ch2. I. Ideal Basic Circuit Elements

› Ideal Wire:

- Question: In an ideal wire is there an electric field that pushes the current ?
- Answers:

(A) No

(B) Yes

Ch2. I. Ideal Basic Circuit Elements

› Ideal Wire:

- Question: In an ideal wire is there an electric field that pushes the current ?
- Answers: (A) No, but this is a trick question if you think of the detailed physics. For us, there is no voltage difference along the wire and thus no electric field. For this class, it is similar to Newton's second law – a particle in motion continues that motion …

BASIC CIRCUIT ELEMENTS

Ch2. I. Ideal Basic Circuit Elements

› Ideal Independent Voltage Source:

- An ideal independent voltage source maintains a specified voltage across its terminals regardless of the current flowing through it and other elements connected to it.
- The current flowing through an ideal independent voltage source is determined by the rest of the circuit.

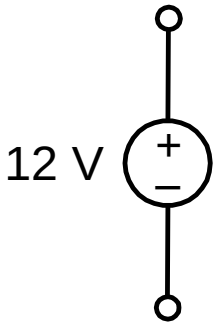

dc voltage source

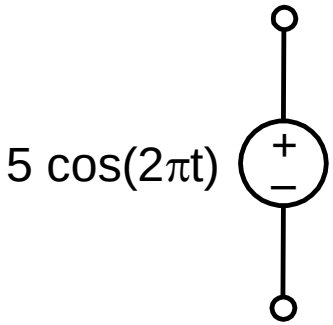

ac voltage source

Batteries can be modeled as a dc voltage source

Ch2. I. Ideal Basic Circuit Elements

› Ideal Independent Current Source:

- An ideal independent current source maintains a specified current flow through its terminals regardless of the voltage across it and other elements connected to it.
- The voltage across an ideal independent current source is determined by the rest of the circuit.

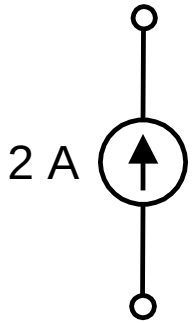

dc current source

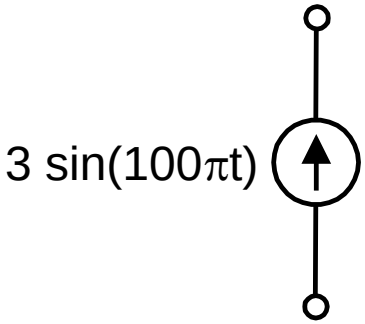

ac current source

Keithley current source

BASIC CIRCUIT ELEMENTS

Ch2. I. Ideal Basic Circuit Elements

› Ideal Dependent Sources or Controlled Sources:

- Drawn with a diamond shape around it.
- Come in four varieties, discussed in following slides.

Dependent Sources

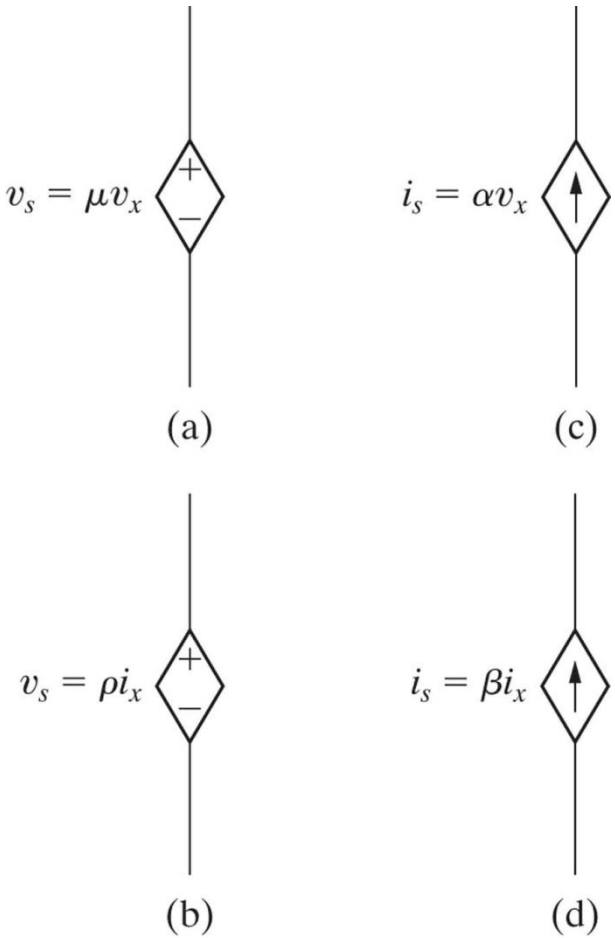

Independent Sources

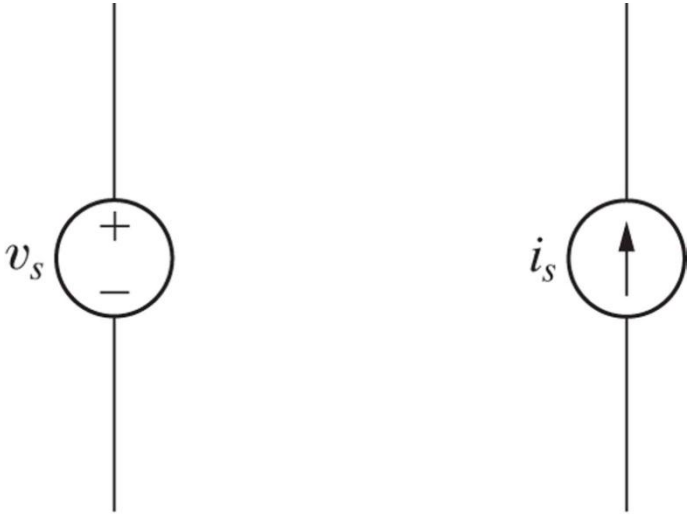

Ch2. I. Ideal Basic Circuit Elements

› Voltage Controlled Voltage Source (VCVS)

- A VCVS maintains a voltage across its terminals that is proportional to the voltage across a pair of terminals elsewhere in the circuit.
- In general the voltage across a VCVS is μv_x where μ is a gain with units (V/V) so it is really unitless.

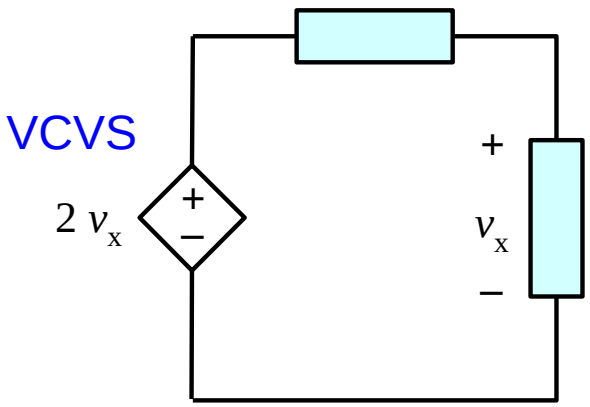

Ch2. I. Ideal Basic Circuit Elements

› Current Controlled Voltage Source (CCVS)

- A CCVS maintains a voltage across its terminals that is proportional to the current through a circuit element elsewhere in the circuit.
- In general the voltage across a VCVS is ρi_x where ρ is a gain with units (V/A).

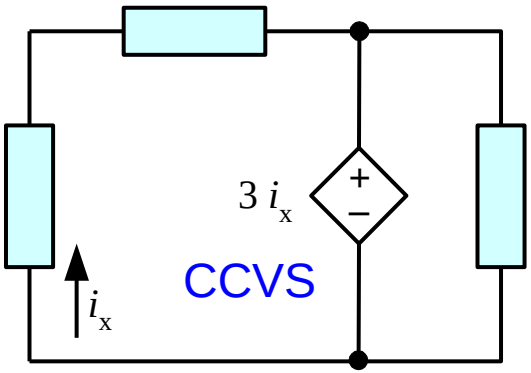

Ch2. I. Ideal Basic Circuit Elements

› Voltage Controlled Current Source (VCCS)

- A VCCS maintains a current through its terminals that is proportional to the voltage across a pair of terminals elsewhere in the circuit.
- In general the current through a VCCS is αv_x where α is a gain with units (A/V).

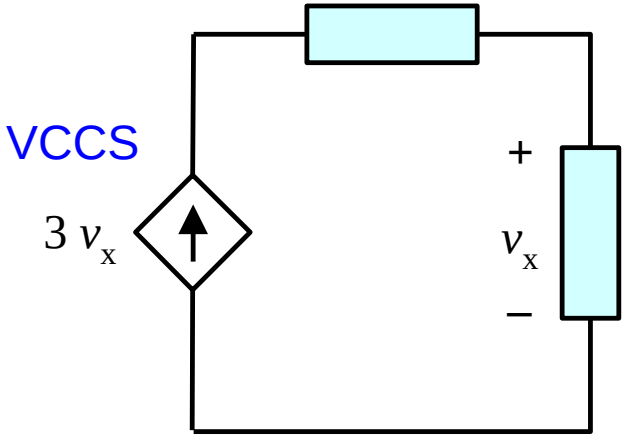

Ch2. I. Ideal Basic Circuit Elements

› Current Controlled Current Source (CCCS)

- A CCCS maintains a current through its terminals that is proportional to the current through an element elsewhere in the circuit.
- In general the current through a CCCS is βi_x where β is a gain with units (A/A) so it is unitless.

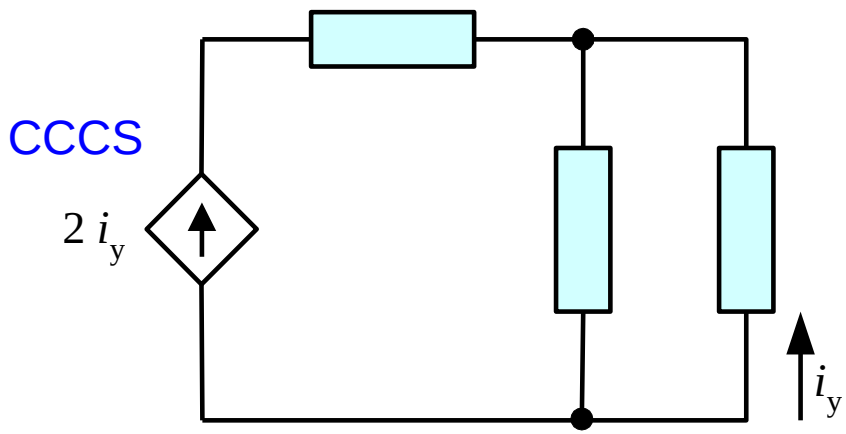

Ch2. I. Ideal Basic Circuit Elements

› Valid or Not Valid ?

Yes

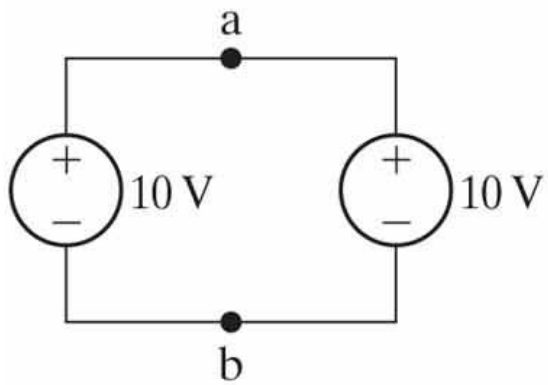

No

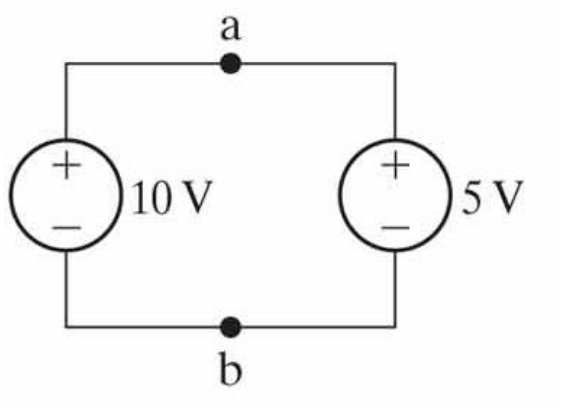

Ch2. I. Ideal Basic Circuit Elements

› Valid or Not Valid ?

No

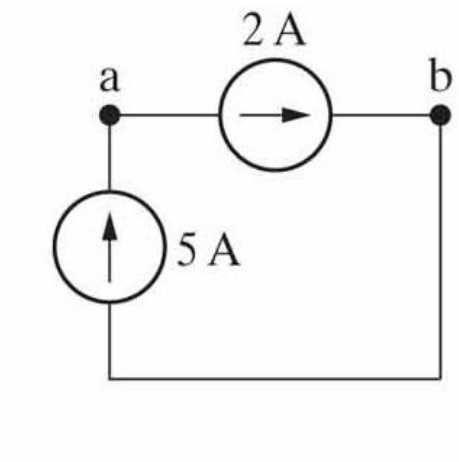

Yes

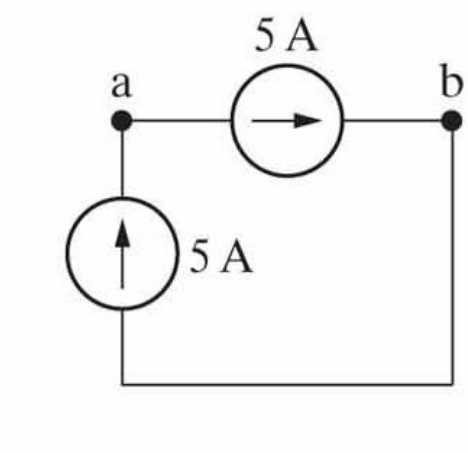

Ch2. I. Ideal Basic Circuit Elements

› Question: Are these circuits Valid or Not Valid ?

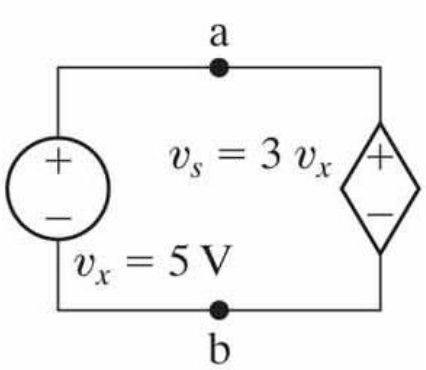

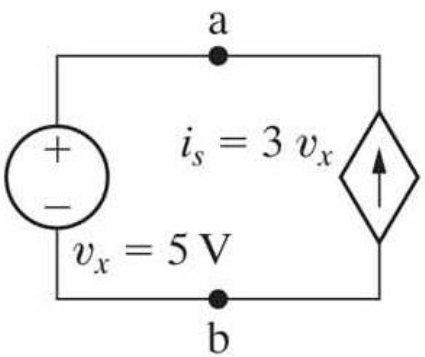

Ch2. I. Ideal Basic Circuit Elements

› Question: Are these circuits Valid or Not Valid ?

No

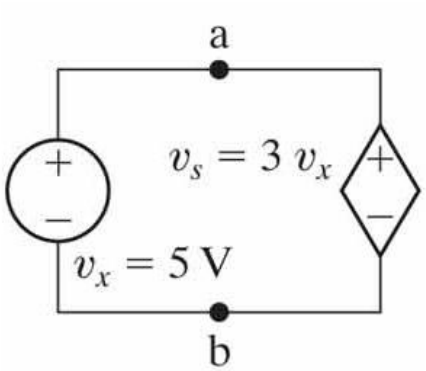

Yes

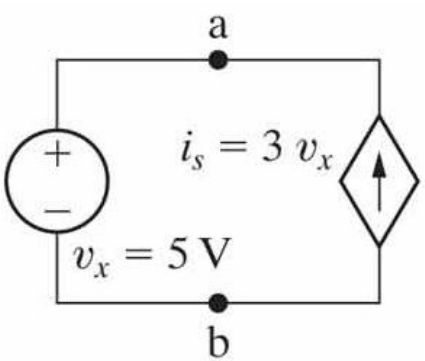

RESISTOR AND OHM'S LAW

Ch2. II. Resistor and Ohm's Law

- Ohm's Law: The voltage across an ideal resistor is proportional to the current through it.
- The circuit symbol for a resistor is:

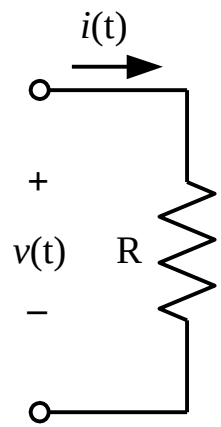

The constant of proportionality is the resistance R. The units of resistance are V/A, which are called ohms (Ω).

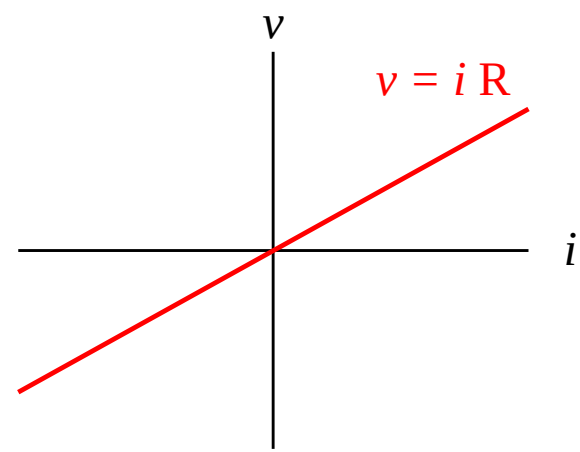

i-v characteristic of an ideal resistor

Ohms' Law

$$\boxed{v(t) = i(t)R}$$

$$\boxed{i(t) = v(t)/R = G\,v(t)}$$

$$G = \frac{1}{R}$$

G is called the conductance G. The units of conductance are A/V, which are called mhos (Ω^{-1}).

RESISTOR AND OHM'S LAW

Ch2. II. Resistor and Ohm's Law

› Passive sign convention and Ohm's Law: (Current flows into the positive terminal of the device, then use + sign to write Ohm's law.)

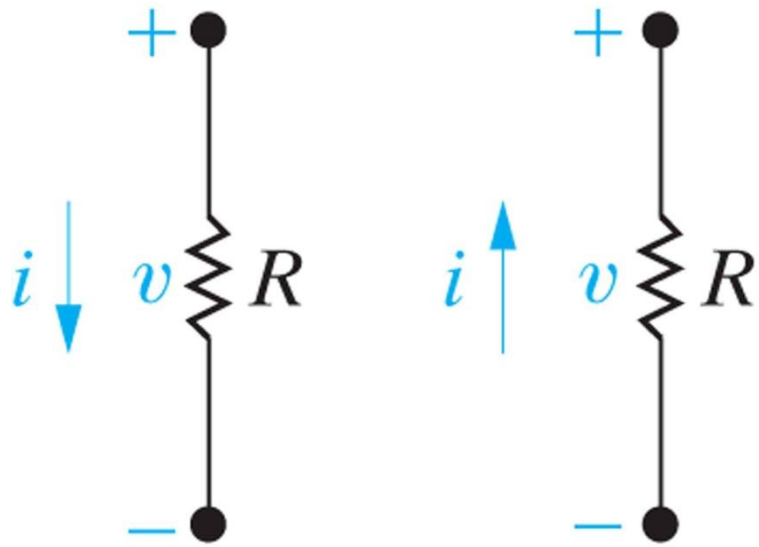

v = iR v = - iR

RESISTOR AND OHM'S LAW

Ch2. II. Resistor and Ohm's Law

› Real Resistors:

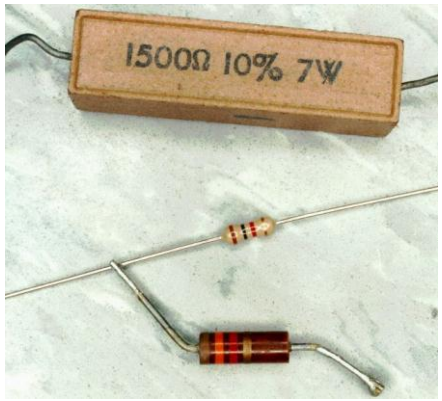

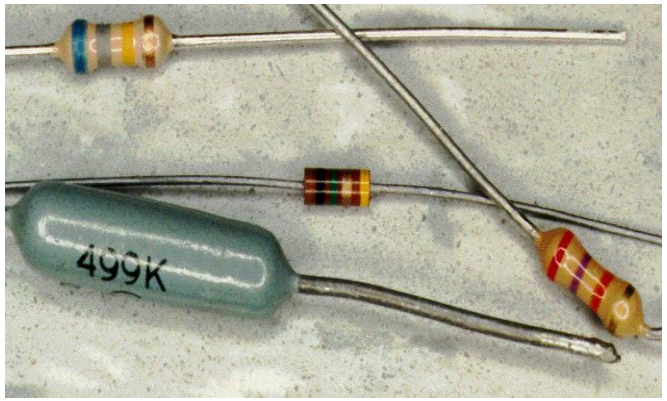

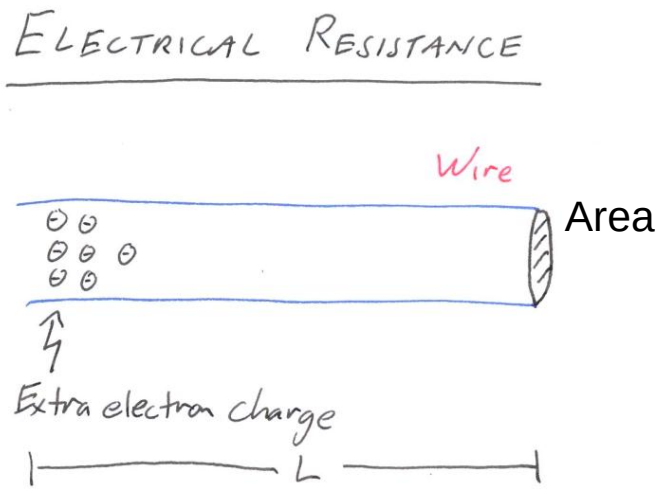

Resistivity

$$R = \frac{\rho L}{\text{Area}}$$

Resistance increases with length, but decreases with cross-sectional area.

The units of resistivity are Ωm.

RESISTOR AND OHM'S LAW

Ch2. II. Resistor and Ohm's Law

› Resistivity of Materials at 300 K: (Ωm)

Conductors		Semiconductors	
Aluminium	2.73×10^{-8}	Silicon (device grade)	10^{-5} to 1
Carbon (amorphous)	3.5×10^{-5}	depends on impurity concentration	
Copper	1.72×10^{-8}		
Gold	2.27×10^{-8}	**Insulators**	
Nichrome	1.12×10^{-6}	Fused quartz	$> 10^{21}$
Silver	1.63×10^{-8}	Glass (typical)	1×10^{12}
Tungsten	5.44×10^{-8}	Teflon	1×10^{19}

Smaller the resistivity, the better the conductor. Resistivity depends on the temperature.

A short circuit (i.e. an ideal conductor) is a resistor of 0 Ω resistance (no such material exists, but a thick copper wire can be a good approximation).

An open circuit is a resistor of 0 S conductance (or equivalently ∞ Ω resistance). Again no such material exists, but some insulators can be a good approximation.

Ch2. II. Resistor and Ohm's Law

› Resistance Calculation:

Calculate the resistance of a copper wire having a diameter of 2.05 mm and a length of 10 m.

$$A = \frac{\pi d^2}{4} = \frac{\pi (2.05 \times 10^{-3})^2}{4} = 3.3 \times 10^{-6}\ \mathrm{m}^2$$

$$\Rightarrow R = \frac{\rho L}{A} = \frac{(1.72 \times 10^{-8})(10)}{(3.3 \times 10^{-6})} = 0.052\,\Omega$$

Ch2. II. Resistor and Ohm's Law

› Real Resistors:

Composition Type Resistors

Carbon Resistors are the most common type of **Composition Resistors**. Carbon resistors are a cheap general purpose resistor used in electrical and electronic circuits. Their resistive element is manufactured from a mixture of finely ground carbon dust or graphite (similar to pencil lead) and a non-conducting ceramic (clay) powder to bind it all together.

The ratio of carbon dust to ceramic (conductor to insulator) determines the overall resistive value of the mixture and the higher the ratio of carbon, the lower the overall resistance. The mixture is moulded into a cylindrical shape with metal wires or leads are attached to each end to provide the electrical connection as shown, before being coated with an outer insulating material and colour coded markings to denote its resistive value.

Carbon Resistor

Carbon Resistor

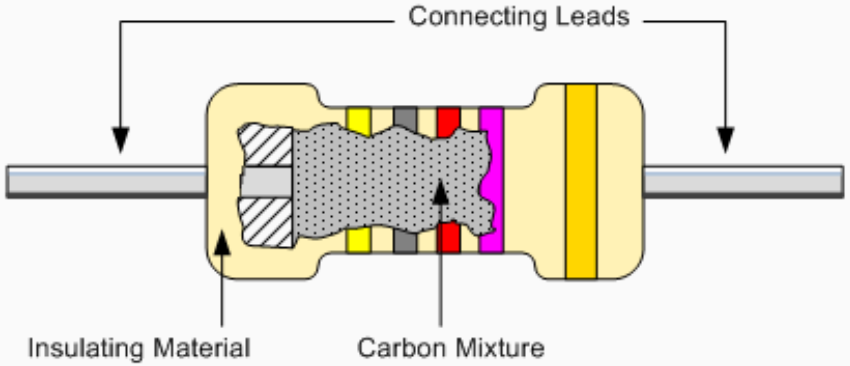

http://www.electronics-tutorials.ws/resistor/res_1.html

Ch2. II. Resistor and Ohm's Law

› Real Resistors:

Film Type Resistors

The generic term "**Film Resistor**" consist of *Metal Film*, *Carbon Film* and *Metal Oxide Film* resistor types, which are generally made by depositing pure metals, such as nickel, or an oxide film, such as tin-oxide, onto an insulating ceramic rod or substrate.

The resistive value of the resistor is controlled by increasing the desired thickness of the deposited film giving them the names of either "thick-film resistors" or "thin-film resistors". Once deposited, a laser is used to cut a high precision spiral helix groove type pattern into this film. The cutting of the film has the effect of increasing the conductive or resistive path, a bit like taking a long length of straight wire and forming it into a coil.

Film Resistor

This method of manufacture allows for much closer tolerance resistors (1% or less) as compared to the simpler carbon composition types. The tolerance of a resistor is the difference between the preferred value (i.e, 100 ohms) and its actual manufactured value i.e, 103.6 ohms, and is expressed as a percentage, for example 5%, 10% etc, and in our example the actual tolerance is 3.6%. Film type resistors also achieve a much higher maximum ohmic value compared to other types and values in excess of 10MΩ (10 Million Ω´s) are available.

Film Resistor

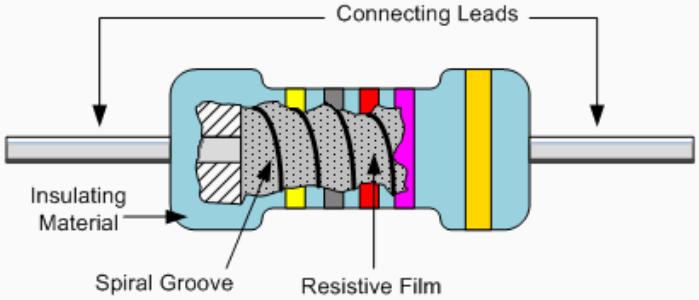

http://www.electronics-tutorials.ws/resistor/res_1.html

Ch2. II. Resistor and Ohm's Law

› Chip Resistors:

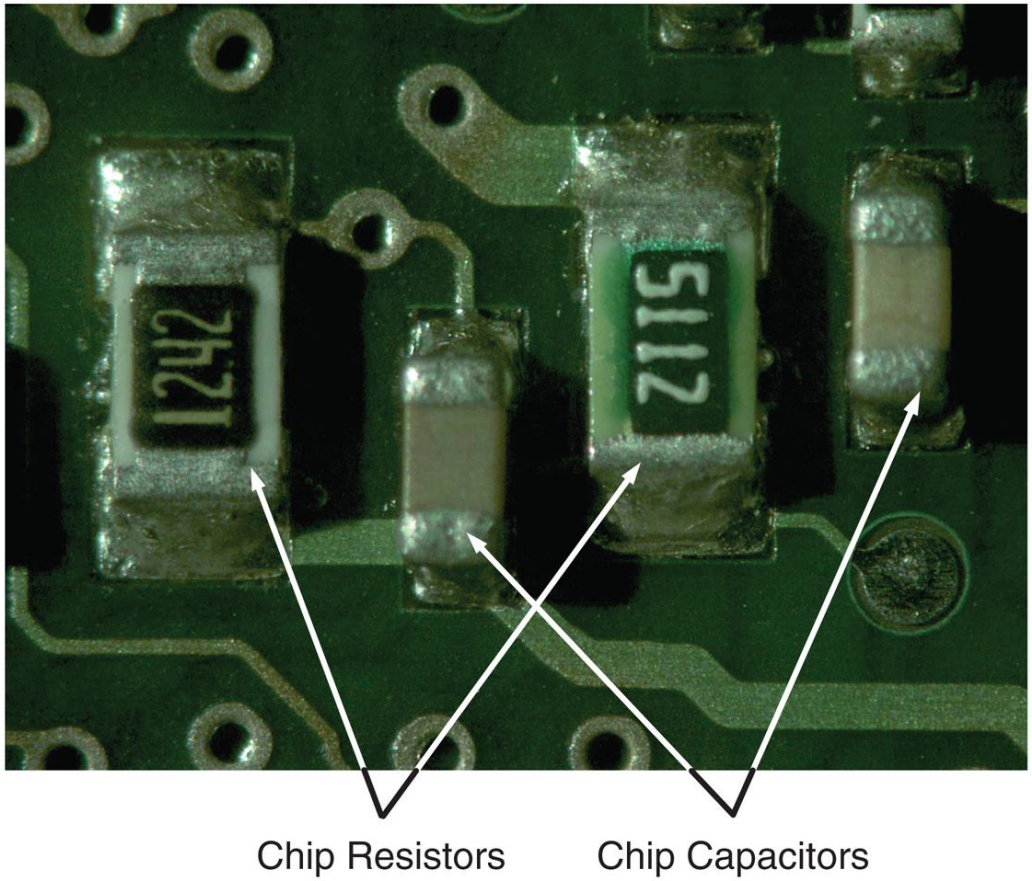

Ch2. II. Resistor and Ohm's Law

› Chip Resistors:

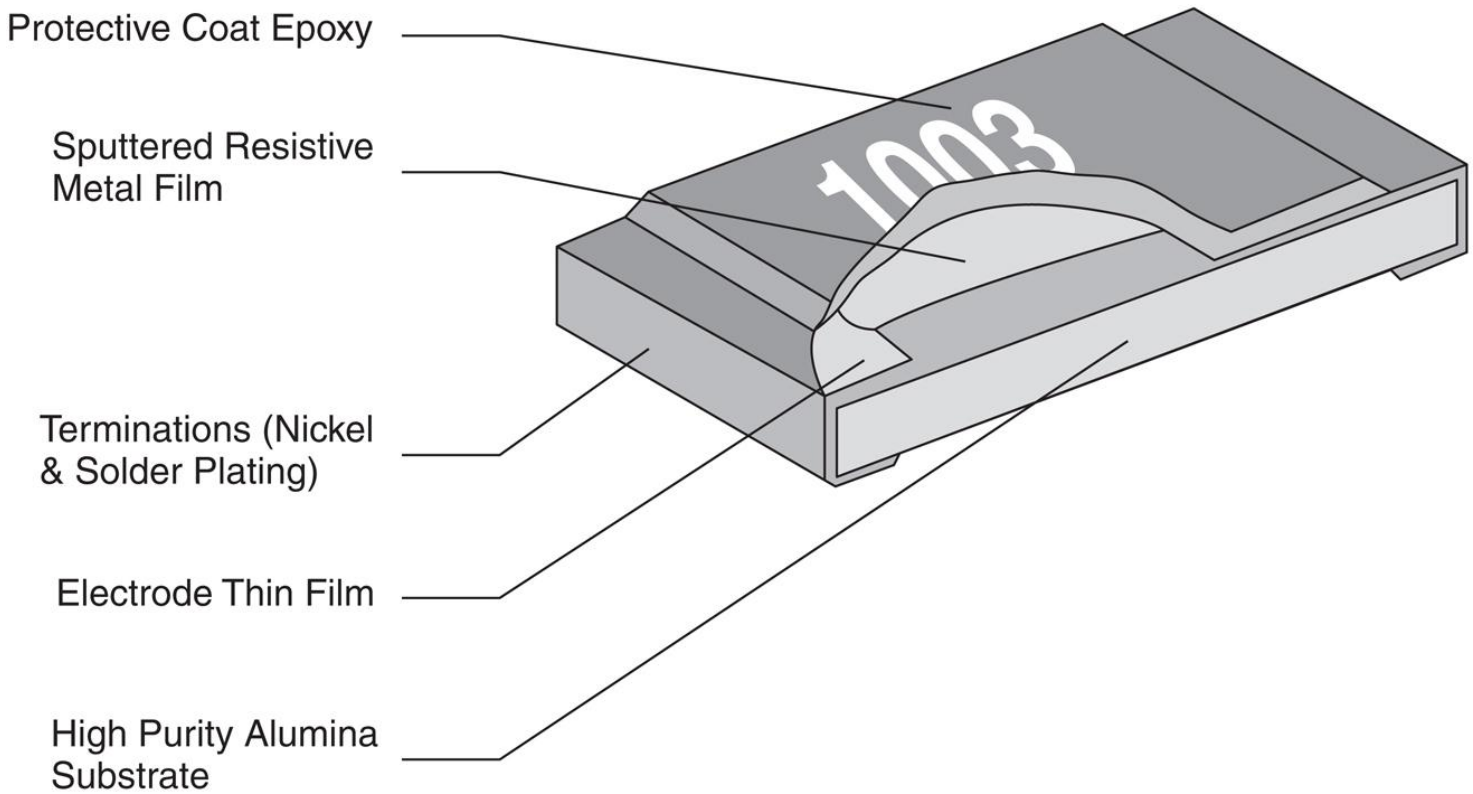

Ch2. II. Resistor and Ohm's Law

- Power in a Resistor:
  - We can calculate the power in a resistor in terms of voltage using Ohm's Law (v=iR) and the expression for power (p=vi).

$$P = vi = v\left(\frac{v}{R}\right) = \frac{v^2}{R}$$

  - We can calculate the power in a resistor in terms of current using Ohm's Law (v=iR) and the expression for power (p=vi).

$$P = vi = (iR)i = i^2 R$$

Ch2. II. Resistor and Ohm's Law

› Using Ohm's Law:

Given current and resistance
Find the voltage

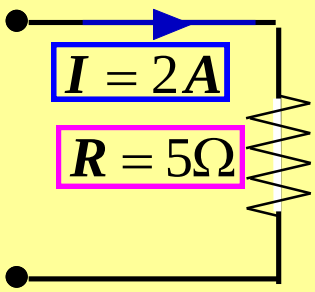

Given current and resistance
Find the voltage

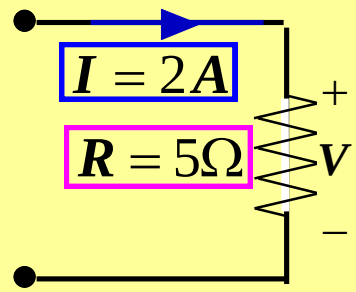

$$v = iR$$

Ch2. II. Resistor and Ohm's Law

› Using Ohm's Law:

Given Current and Voltage
Find Resistance

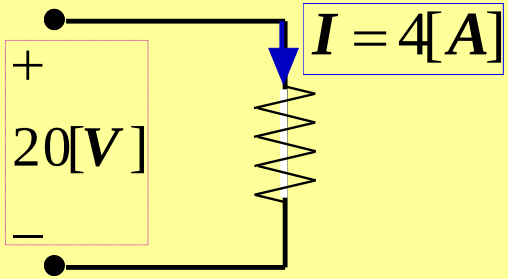

Given Current and Voltage
Find Resistance

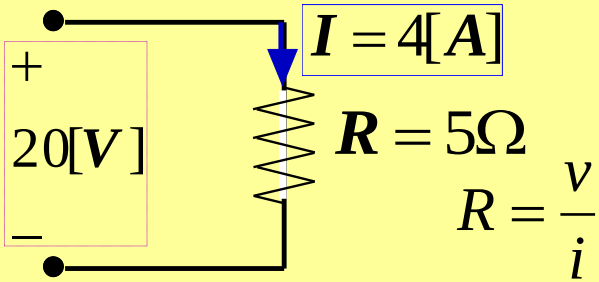

$$R = \frac{v}{i}$$

RESISTOR AND OHM'S LAW

Ch2. II. Resistor and Ohm's Law

› Using Ohm's Law:

Given Voltage and Resistance
Compute Current

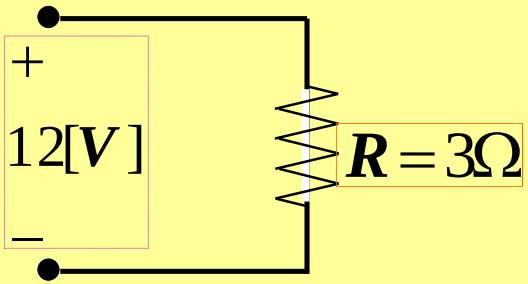

Given Voltage and Resistance
Compute Current

$$i = \frac{v}{R}$$

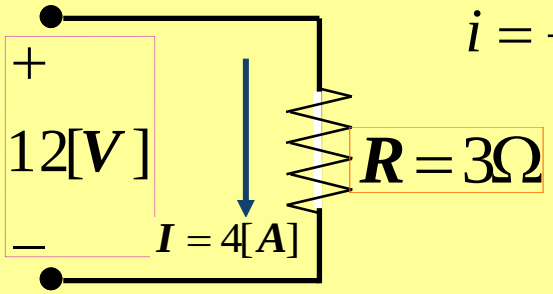

Note: we determine the direction of current (blue arrow) using the passive sign convention.

RESISTOR AND OHM'S LAW

Ch2. II. Resistor and Ohm's Law

› Using Ohm's Law and Keeping Units Straight:

Table 1 Keeping Units Straight

Voltage	Current	Resistance
Volts	Amps	Ohms
Volts	mA	$k\Omega$
mV	A	$m\Omega$
mV	mA	Ω

RESISTOR AND OHM'S LAW

Ch2. II. Resistor and Ohm's Law

› More Ohm's Law:

› Find the current and power absorbed by the resistor ?

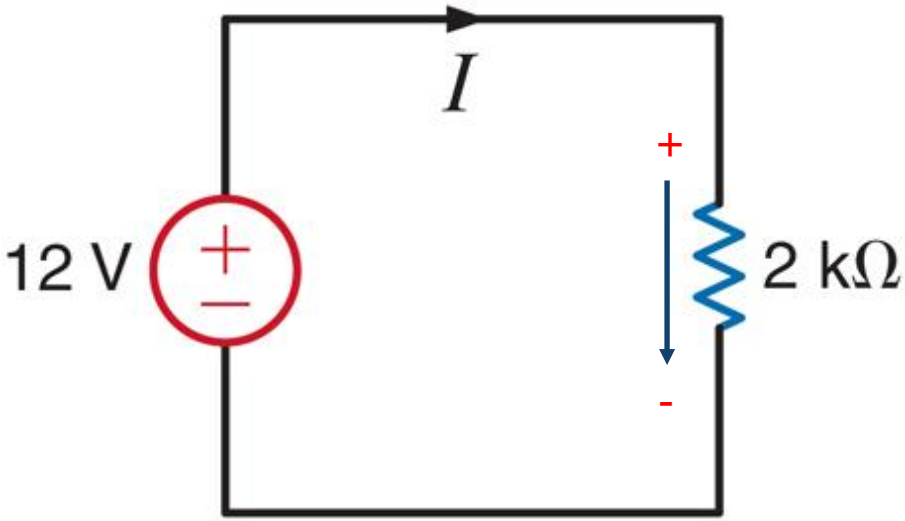

Use passive sign convention.

$$I = \frac{12[\mathrm{V}]}{2[\mathrm{k}\Omega]} = 6[\mathrm{mA}]$$

$$P = VI = (12[\mathrm{V}])(6[\mathrm{mA}]) = 72[\mathrm{mW}]$$

Ch2. II. Resistor and Ohm's Law

- More Ohm's Law:
  - Find the voltage of the voltage source and power absorbed by the resistor ?

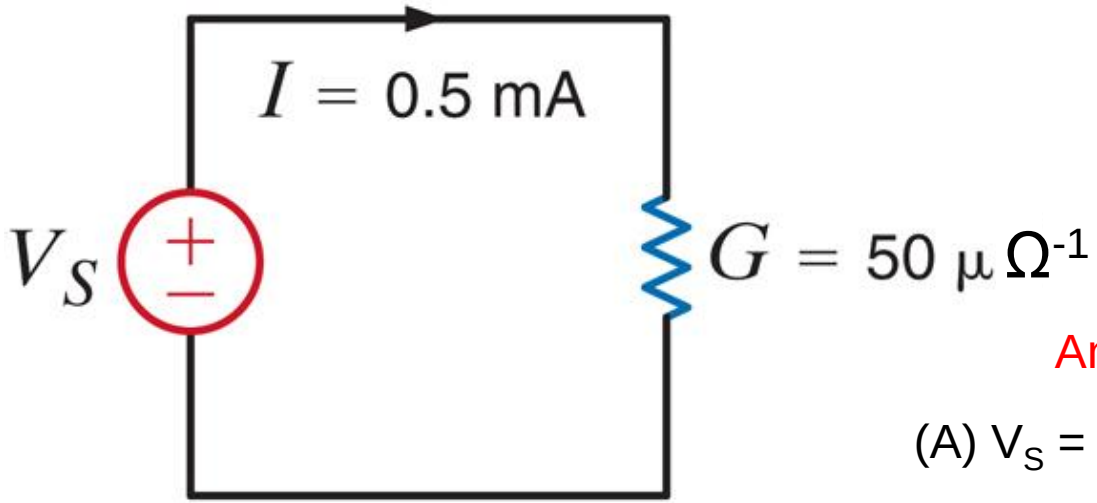

Answers:

(A) V_S = 25 nV; 1.25 x 10^{-11} W

(B) Vs = 10 V; 5 mW

(C) Vs = 1 V; 0.5 mW

RESISTOR AND OHM'S LAW

Ch2. II. Resistor and Ohm's Law

› More Ohm's Law:

› Find the voltage of the voltage source and power absorbed by the resistor ?

Use passive sign convention.

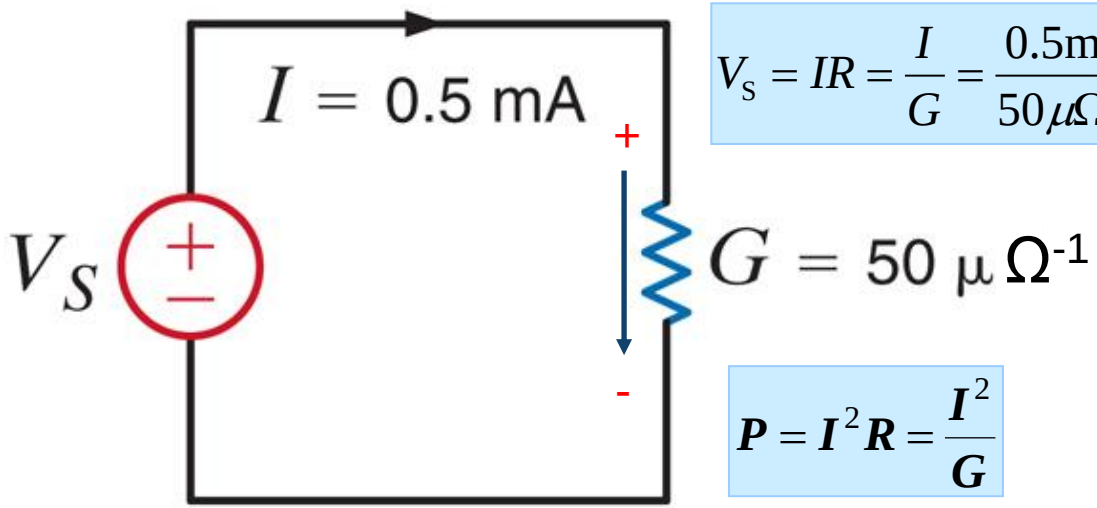

$$V_S = IR = \frac{I}{G} = \frac{0.5\text{mA}}{50\mu\Omega^{-1}} = \frac{0.5\cdot 10^{-3}\text{A}}{50\cdot 10^{-6}\Omega^{-1}} = 10\text{V}$$

$$\boldsymbol{P = I^2 R = \frac{I^2}{G}}$$

$$P = \frac{\left(0.5\times 10^{-3}[A]\right)^2}{50\times 10^{-6}[\Omega^{-1}]} = 0.5\times 10^{-2}[W] = 5[mW]$$

NODES, LOOPS, AND BRANCHES

Ch2. III. Nodes, Loops, and Branches

- A branch represents a single element such as a voltage source or a resistor.
- A node is the point of connection between two or more branches.
- A loop is any closed path in a circuit.

- A network with b branches, n nodes, and L independent loops will satisfy the fundamental theorem of network topology:
  - $b = L + n - 1$

How many branches, nodes, loops ?

3 Nodes
3 Loops
5 Branches
5 = 3 + 3 - 1

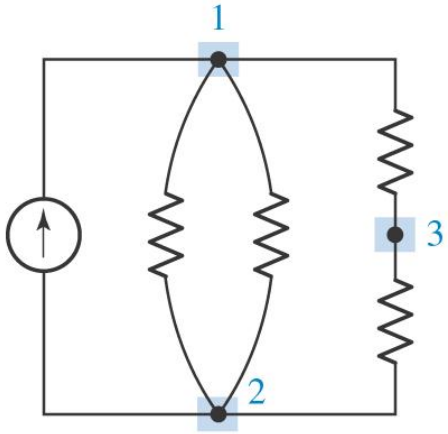

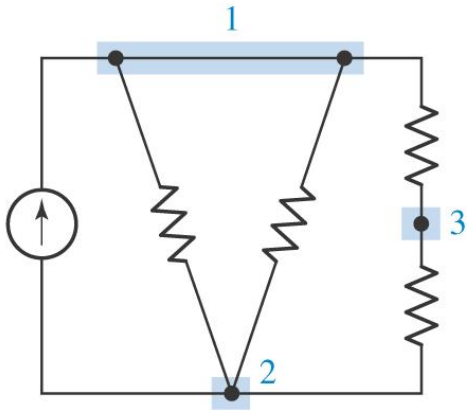

NODES, LOOPS, AND BRANCHES

Ch2. III. Nodes, Loops, and Branches

› How many branches, nodes and loops are there ?

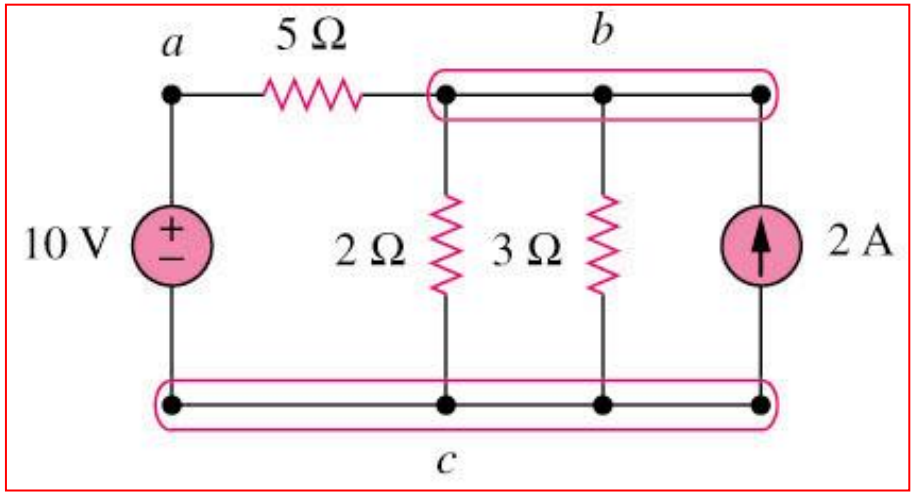

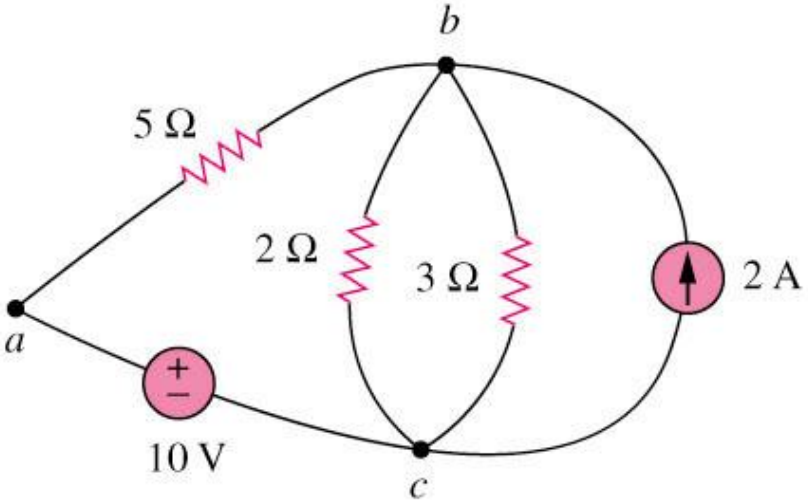

3 Nodes
3 Loops
5 Branches
5 = 3 + 3 - 1

NODES, LOOPS, AND BRANCHES

Ch2. III. Nodes, Loops, and Branches

- An essential node is a node where three or more circuit elements join.
- An essential branch is a branch path connecting two essential nodes.
- A network with b_E branches, n_E nodes, and L independent loops will satisfy the fundamental theorem of network topology:
  - $b_E = L + n_E - 1$

How many essential branches, essential nodes, loops ?

Node 3 is not an essential node.

2 Essential Nodes
3 Loops
4 Essential Branches
4 = 3 + 2 - 1

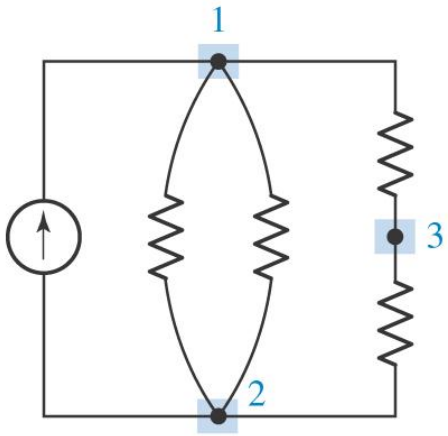

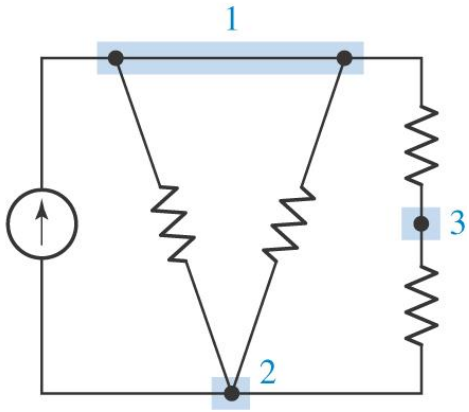

KIRCHHOFF'S CURRENT LAW

Ch2. IV. Kirchhoff's Current Law (KCL)

- Charge is not created nor destroyed in electric circuits. For this physical reason, we have Kirchoff's Current Law.
- Kirchhoff's Current Law states that the algebraic sum of currents entering (or leaving) a node (or a closed boundary) is zero.

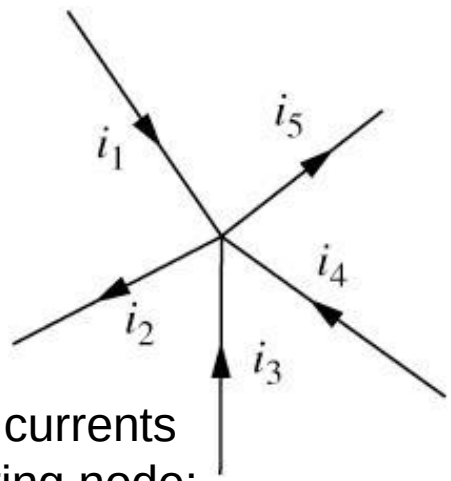

Sum currents entering node:

$$i_1 - i_2 + i_3 + i_4 - i_5 = 0$$

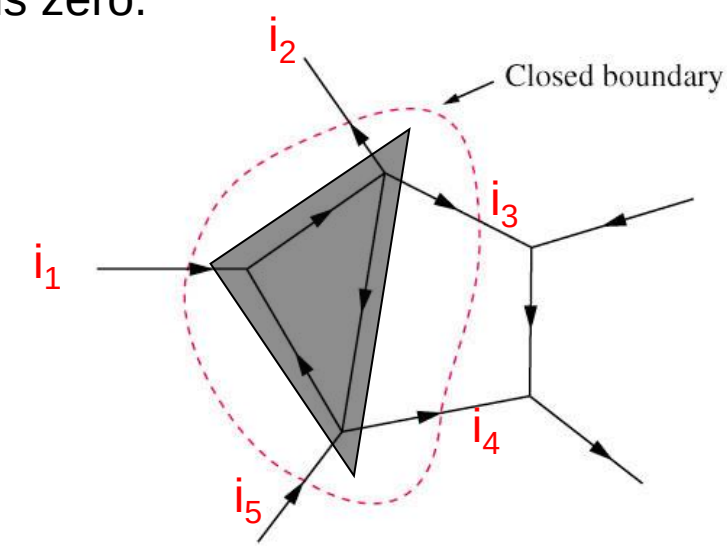

Sum currents leaving boundary:

$$-i_1 + i_2 + i_3 + i_4 - i_5 = 0$$

KIRCHHOFF'S CURRENT LAW

Ch2. IV. Kirchhoff's Current Law

KCL can be applied to supernodes. A supernode is obtained by defining a boundary that enclosed more than one node.

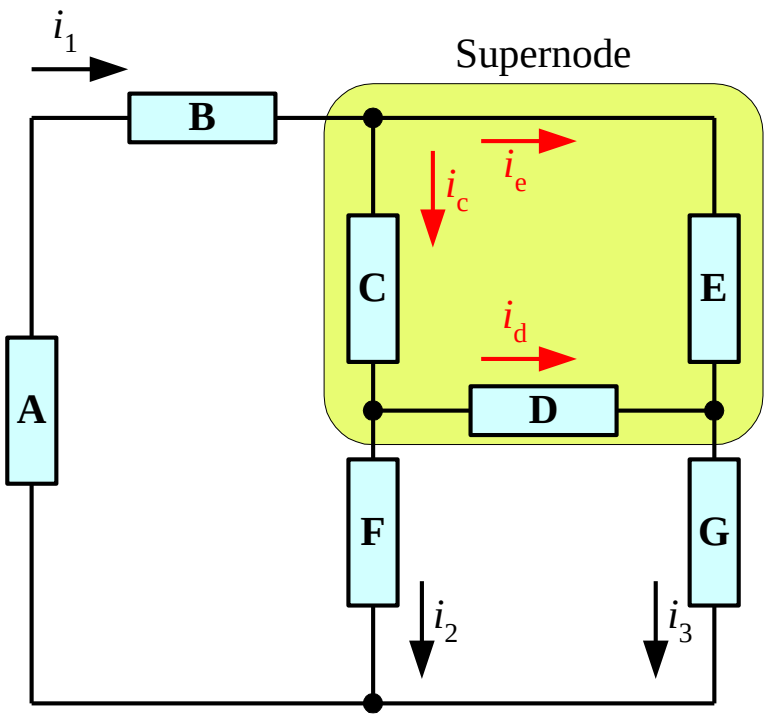

i.e. KCL at supernode: $i_1 = i_2 + i_3$

To verify the claim note that:

$$i_1 = i_c + i_e$$

(now just add these equations)

$$i_c = i_d + i_2$$

$$i_d + i_e = i_3$$

KIRCHHOFF'S CURRENT LAW

Ch2. IV. Kirchhoff's Current Law

Find I_1

$I_1 = -50mA$

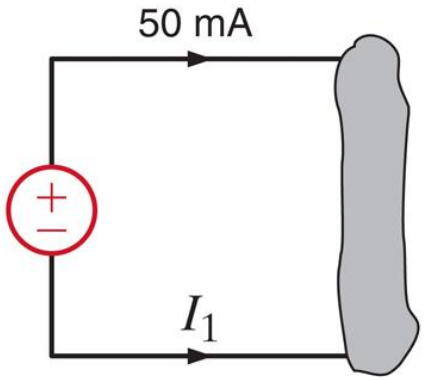

Find I_T

$I_T = 10mA + 40mA + 20mA$

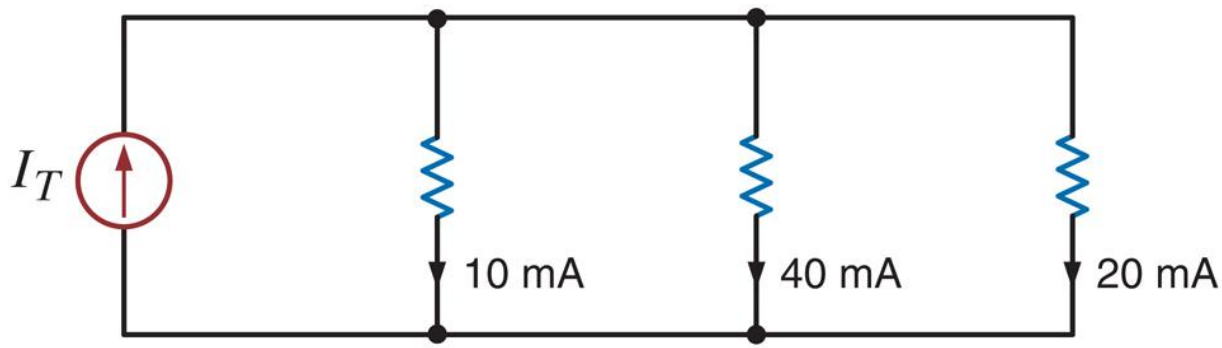

Find I_1

$10mA - 4mA - I_1 = 0$

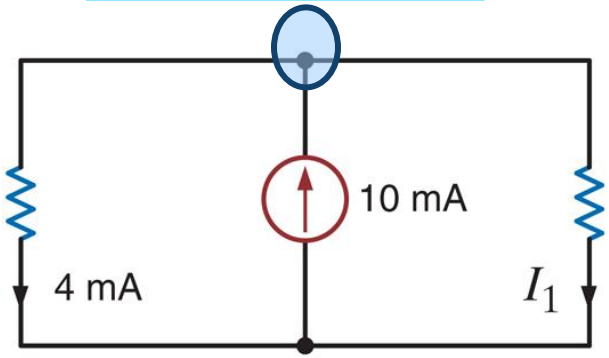

KIRCHHOFF'S CURRENT LAW

Ch2. IV. Kirchhoff's Current Law

Question: Find I_1 and I_2

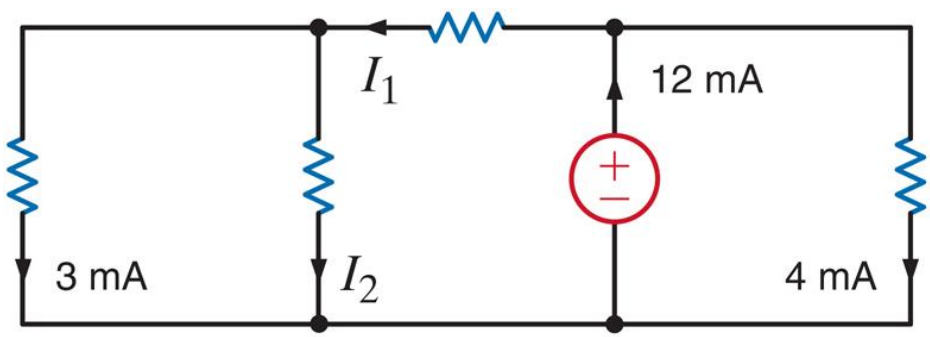

Answers:

(A) I_1 = 9 mA, I_2 = 6 mA

(B) I_1 = -8 mA, I_2 = -5 mA

(C) I_1 = 12 mA, I_2 = 5 mA

(D) I_1 = 8 mA, I_2 = 5 mA

KIRCHHOFF'S CURRENT LAW

Ch2. IV. Kirchhoff's Current Law

Question: Find I_1 and I_2

$$I_2 + 3mA - I_1 = 0$$

$$I_1 + 4mA - 12mA = 0$$

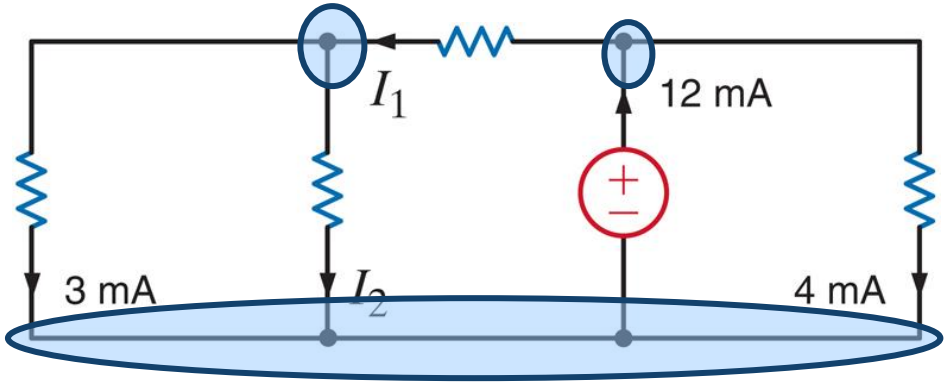

Answer: D

$$3mA + 4mA + I_2 - 12mA = 0$$

KIRCHHOFF'S VOLTAGE LAW

Ch2. V. Kirchhoff's Voltage Law (KVL)

- Electric circuits obey the principle of conservation of energy.
- Similar to a gravitational field, the electric field is conservative. This means that if a charge moves around a loop and comes back to the same point, the net energy gain or loss must be zero.
- Recall that ΔW = qV

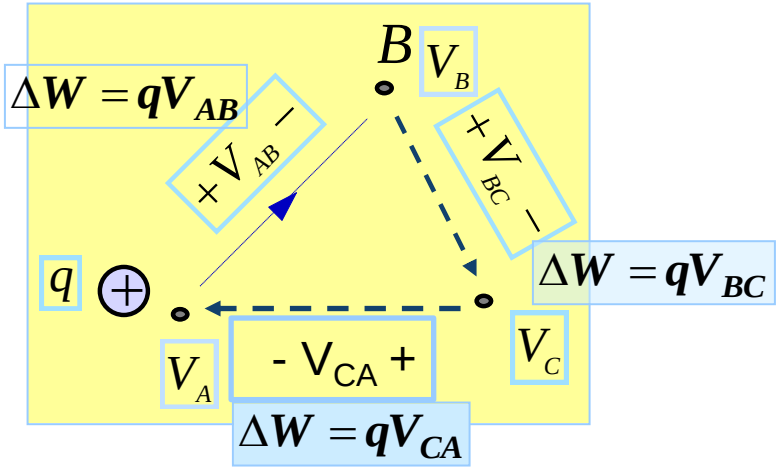

$$\text{Total Energy Gain Around Loop } = q(V_{AB} + V_{BC} + V_{CD}) = 0$$

KIRCHHOFF'S VOLTAGE LAW

Ch2. V. Kirchhoff's Voltage Law (KVL)

- Electric circuits obey the principle of conservation of energy, for this physical reason we have Kirchoff's Voltage Law.
- Kirchhoff's Voltage Law states that the algebraic sum of the voltages around a closed path, or loop, is zero.

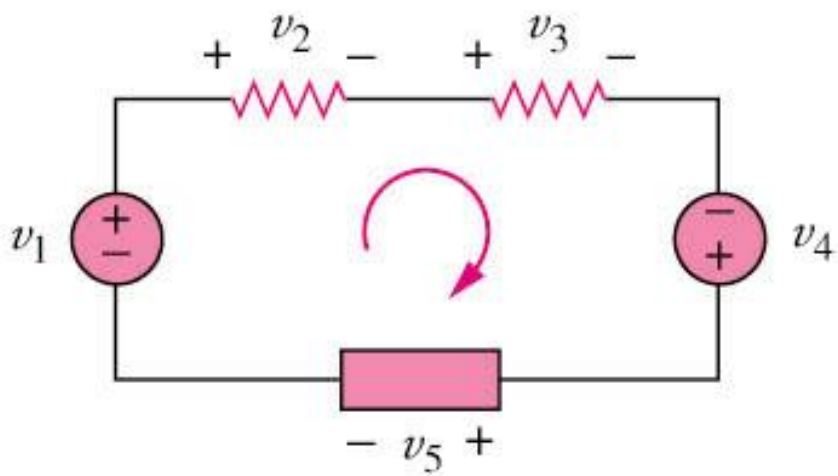

$$\sum_{m=1}^{M} v_n = 0$$

KIRCHHOFF'S VOLTAGE LAW

Ch2. V. Kirchhoff's Voltage Law (KVL)

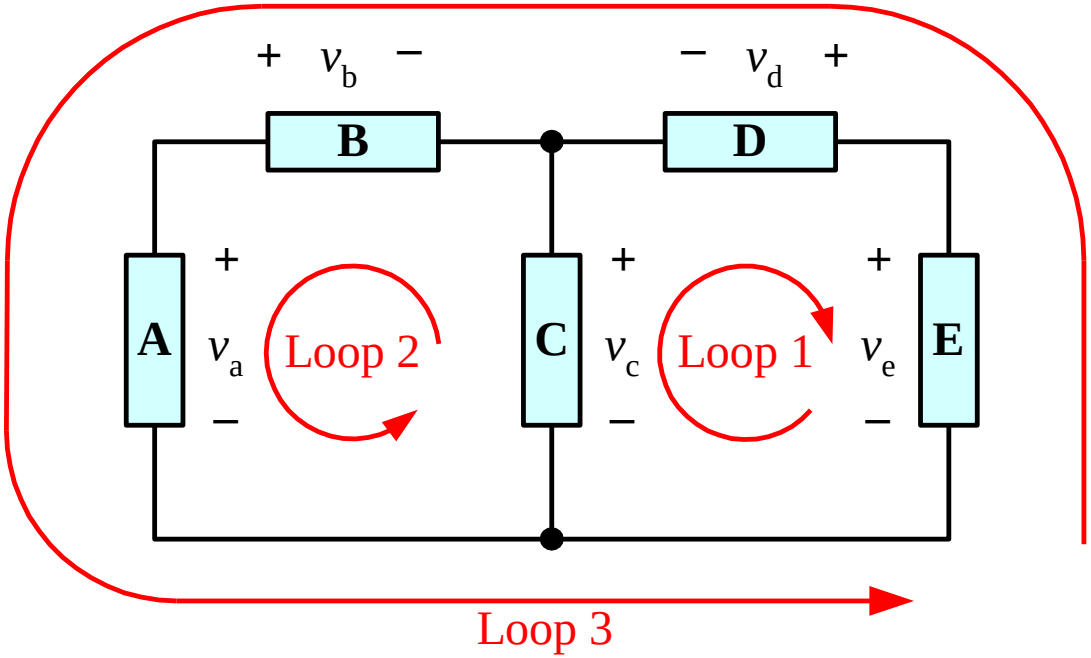

Note that in obtaining loop equations, we sum the voltage drops around the loop (could also sum voltage rise).

In the circuit analysis you are free to choose the direction of the KVL loop.

KVL for loop 3 can be obtained by taking the difference of KVL for loop 2 and 1, i.e. it does not contain any new information.

KVL for loop 1: $v_e - v_c - v_d = 0$

KVL for loop 2: $v_a - v_c - v_b = 0$

KVL for loop 3: $v_a - v_e + v_d - v_b = 0$

KIRCHHOFF'S VOLTAGE LAW

Ch2. V. Kirchhoff's Voltage Law (KVL)

› Find V_{ae} and V_{ec}?

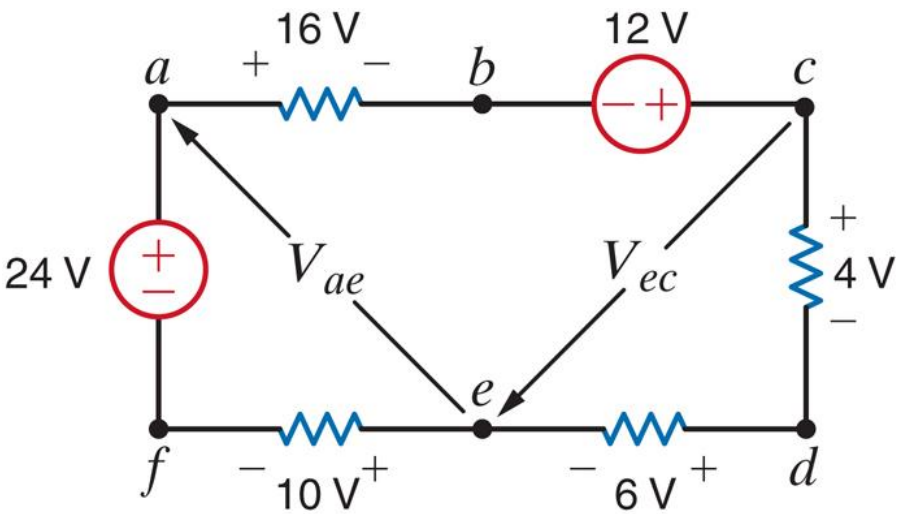

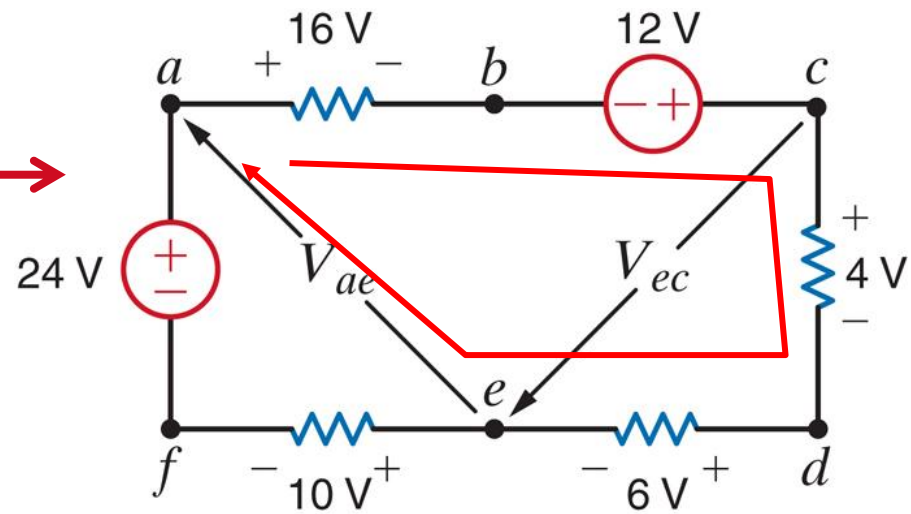

$$16 - 12 + 4 + 6 - V_{ae} = 0$$

KIRCHHOFF'S VOLTAGE LAW

Ch2. V. Kirchhoff's Voltage Law (KVL)

› Find V_{ae} and V_{ec}?

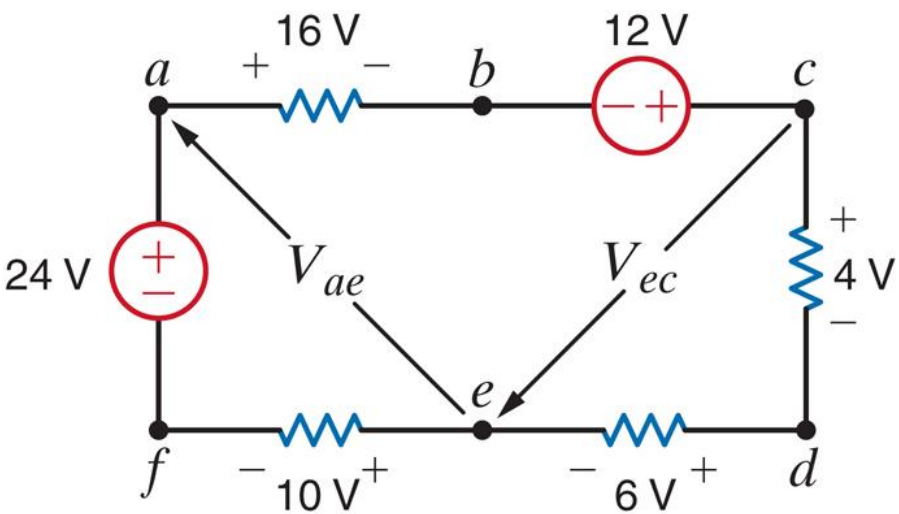

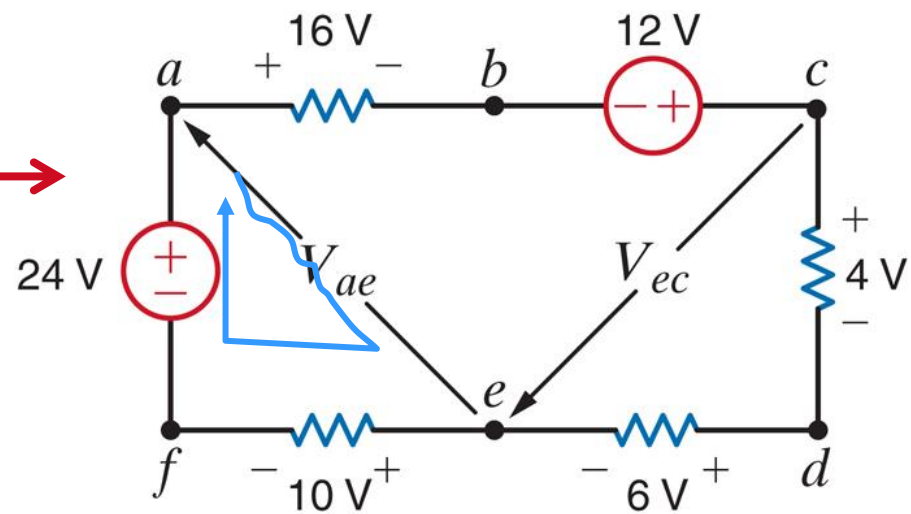

GIVEN THE CHOICE USE THE SIMPLEST LOOP

$$V_{ae} + 10 - 24 = 0$$

$$V_{ae} = 14[\mathrm{V}]$$

KIRCHHOFF'S VOLTAGE LAW

Ch2. V. Kirchhoff's Voltage Law (KVL)

› Find V_{ae} and V_{ec}?

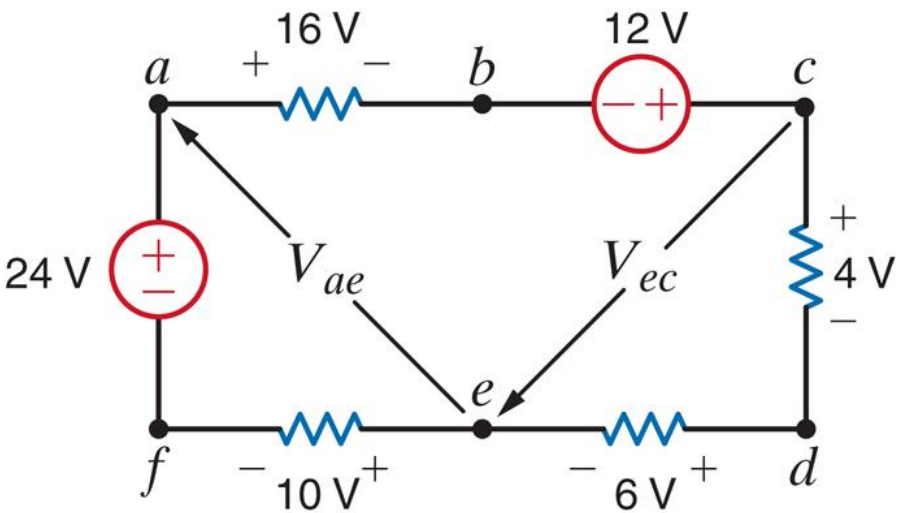

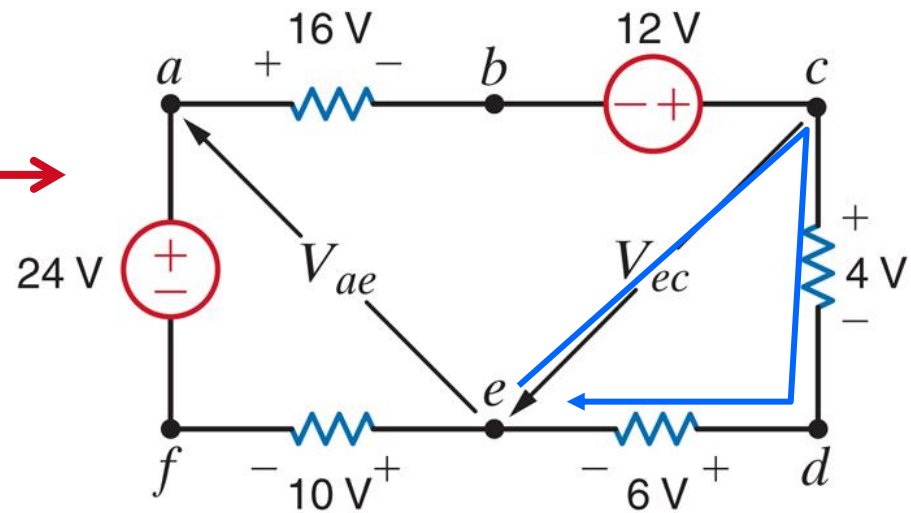

$$V_{ec} + 4 + 6 = 0$$
$$V_{ec} = -10[\mathrm{V}]$$

Ch2. VI. Kirchhoff's Laws, Ohm's Law, and Dependent Sources

Find v_o ?

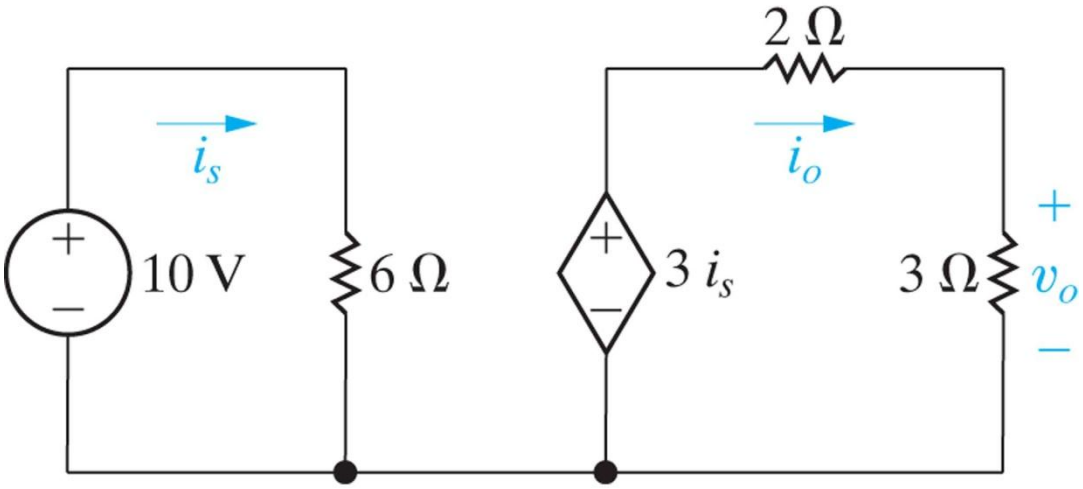

Ch2. VI. Kirchhoff's Laws, Ohm's Law, and Dependent Sources

Find v_o ?

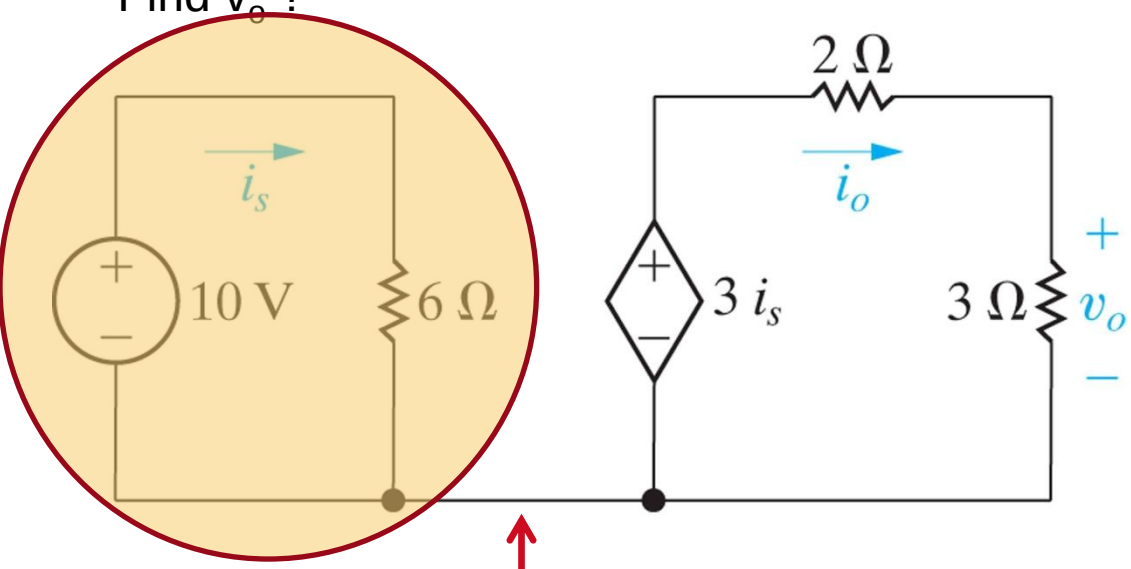

KCL at Boundary means no current here!

Ch2. VI. Kirchhoff's Laws, Ohm's Law, and Dependent Sources

Find v_o ?

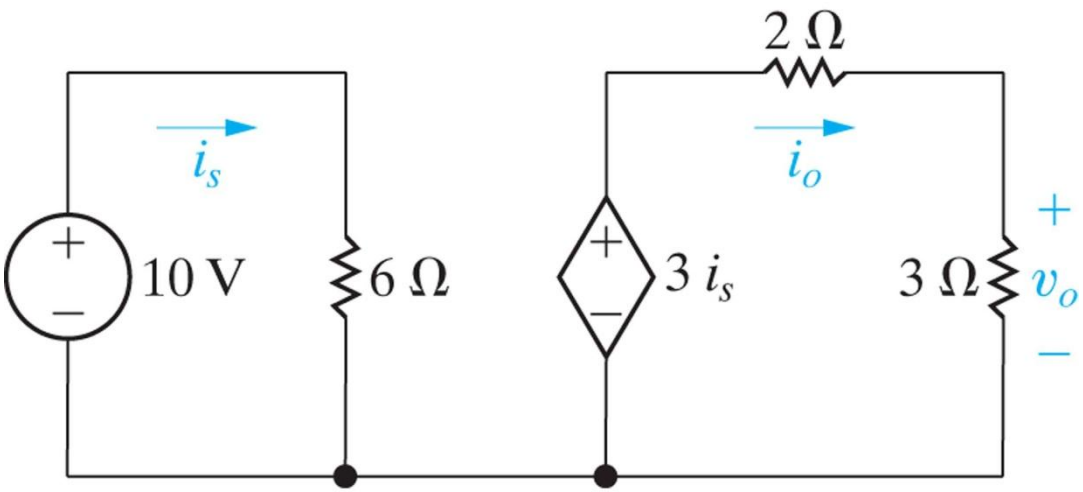

$$i_0 = 1[\mathrm{A}]$$

$$v_0 = 3[\mathrm{V}]$$

Ohm's Law for 6Ω Resistor: $i_s = \frac{5}{3}[\mathrm{A}]$

Ohm's Law for 2Ω and 3Ω Resistor: $3\left(\frac{5}{3}\right) = i_0(2+3)$

Ch2. VI. Kirchhoff's Laws and Ohm's Law

Find i_o ?

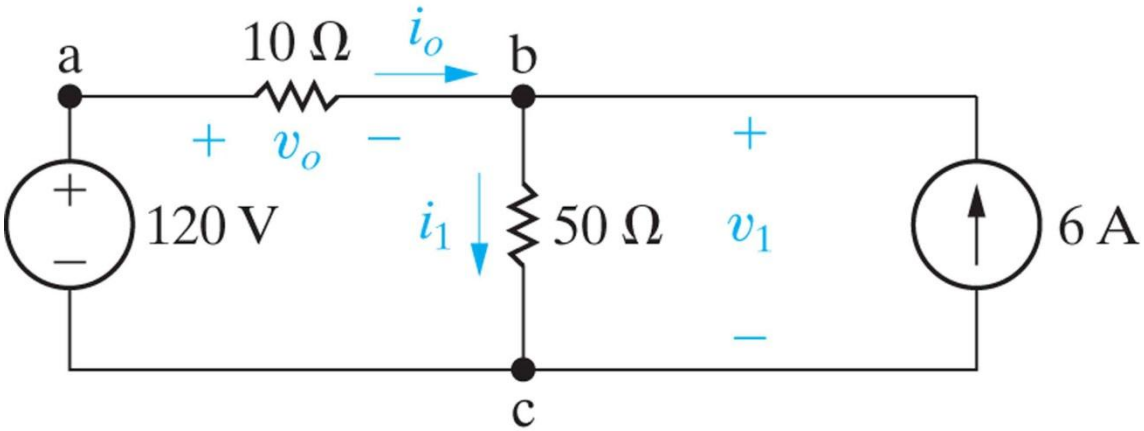

Ch2. VI. Kirchhoff's Laws and Ohm's Law

Find i_o ?

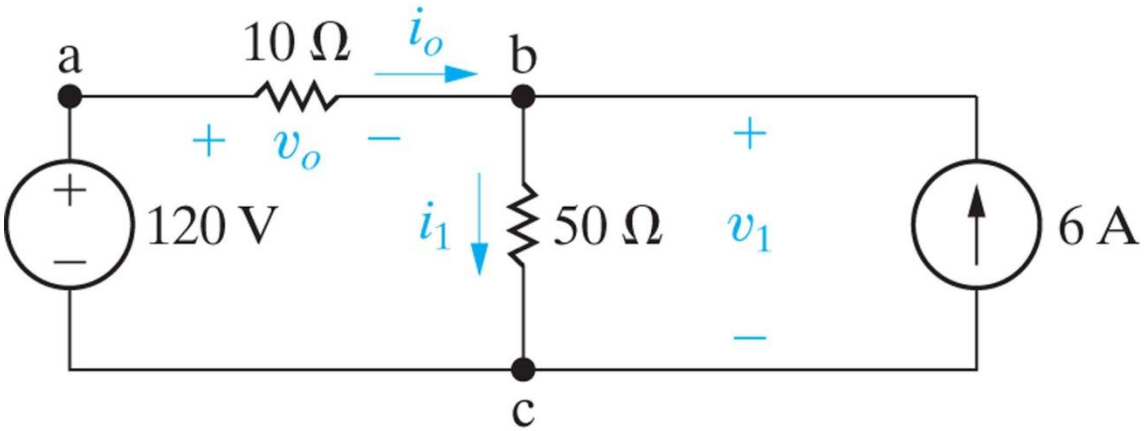

$$i_o - i_1 + 6 = 0$$

$$120 - 50 i_1 = i_o 10$$

$$120 - 50(6 + i_o) = i_o 10$$

$$-180 = i_o 60$$

$$i_o = -3[\mathrm{A}]$$

KCL at node b: $i_o - i_1 + 6 = 0$

Ohm's Law for 10Ω Resistor: $120 - V_b = i_o 10$

Ohm's Law for 50Ω Resistor: $V_b = i_1 50$

Ch2. VI. Kirchhoff's Laws, Ohm's Law, and Dependent Sources

Find v_o ? (Note $v_o = V_b$)

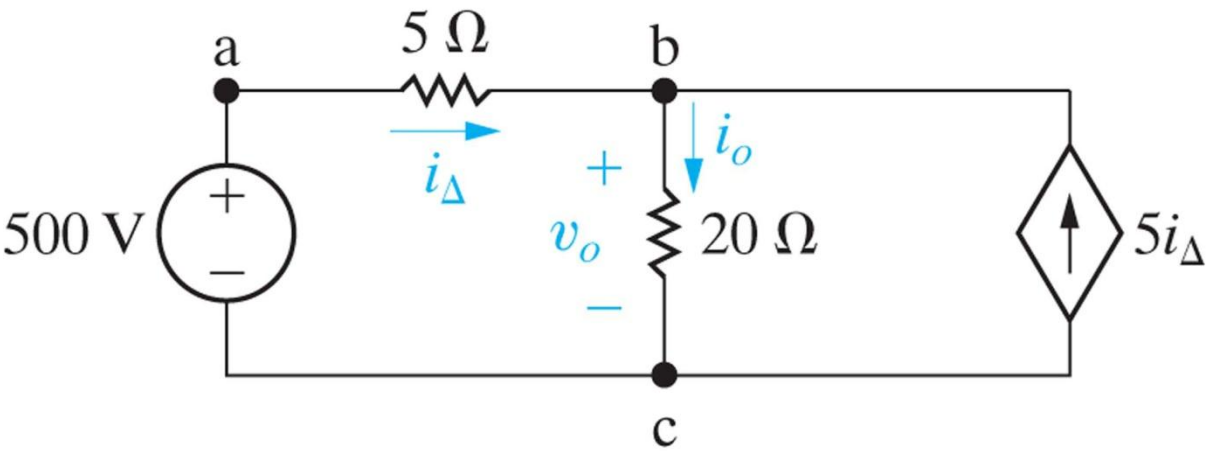

Answers:

(A) $v_o = 400$ V

(B) $v_o = 480$ V

(C) $v_o = 500$ V

(D) $v_o = 300$ V

Ch2. VI. Kirchhoff's Laws, Ohm's Law, and Dependent Sources

Find v_o ? (Note $v_o = V_b$)

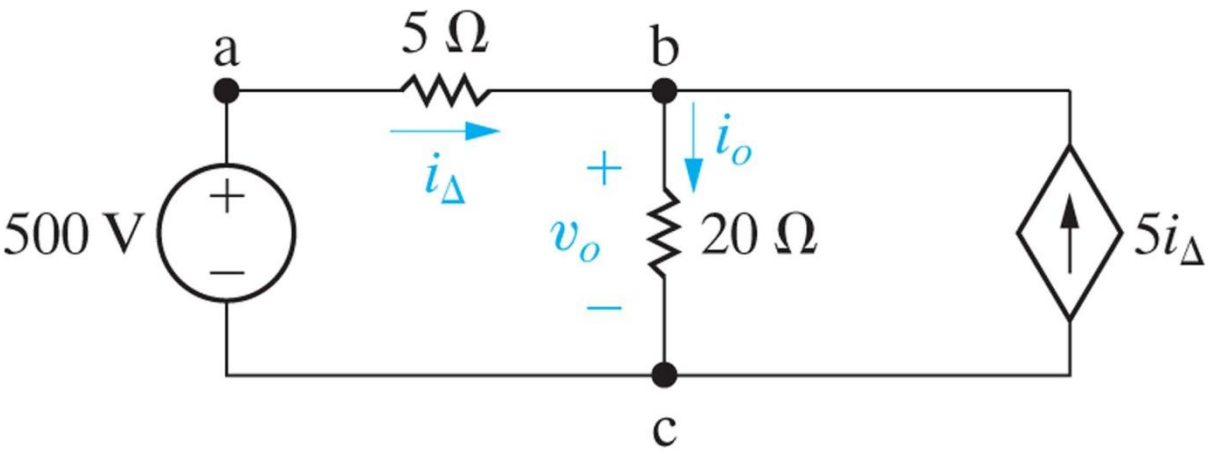

$$V_b = (6i_\Delta)20 = 120i_\Delta$$

$$500 - V_b = \frac{V_b}{120}5$$

$$12000 - 24V_b = V_b$$

$$V_b = 480[\mathrm{V}]$$

KCL at node b: $i_\Delta - i_0 + 5i_\Delta = 0$

Ohm's Law for 5Ω Resistor: $500 - V_b = i_\Delta 5$

Ohm's Law for 20Ω Resistor: $V_b = i_0 20$

Ch2. VII. Electrical Safety

- How to electrically model the human body:
  - R_{skin} (dry)=15 kΩ, R_{skin} (wet)=150 Ω
  - R_{limb}=100 Ω
  - R_{trunk}=200 Ω

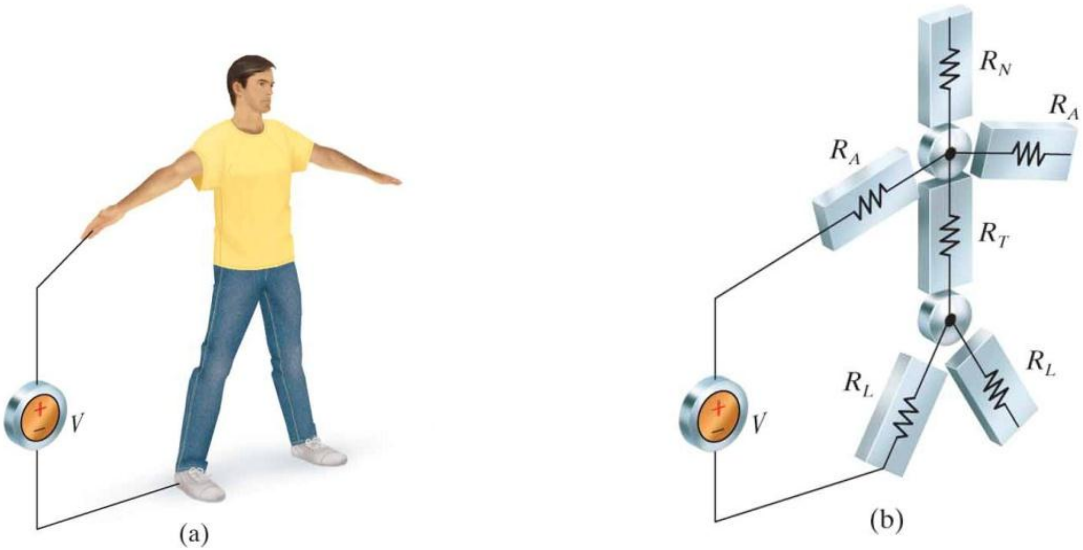

Ch2. VII. Electrical Safety

- First, consider electrostatic shock on a dry day:
  - Around 20,000 to 40,000 V and 40 A – but only for a few microseconds.
  - Current flow is mainly over the body surface
  - Annoying to you, deadly for electrical components
- Consider 50 Hz, 230 V electrical outlets, danger is shown to the right. 0.1 to 0.2 A is fatal causing ventricular fibrillation. 60 Hz current penetrates the body more deeply and electrical outlet sustains the current.

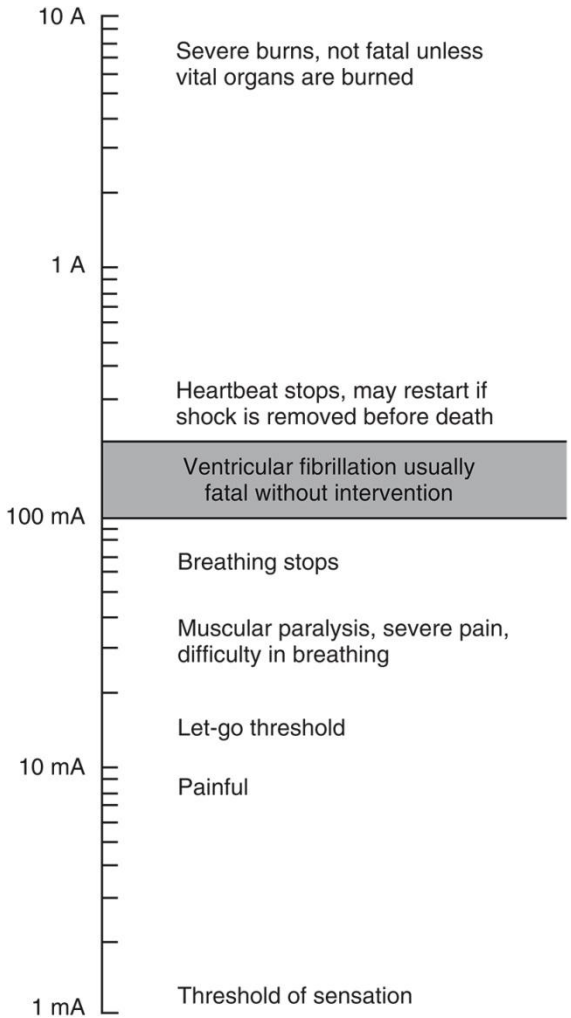

Ch2. VII. Electrical Safety

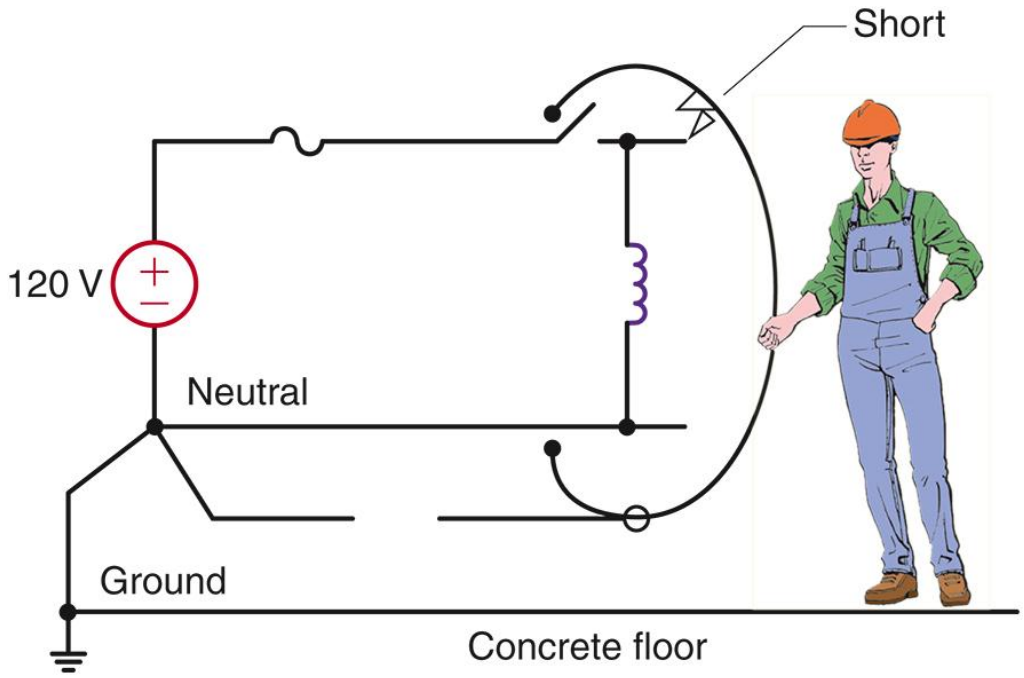

Man working in damp basement using a drill. Insulation on wire nicked and touches casing of drill. Damp concrete relatively good conductor.

If the case is not grounded, man could receive fatal shock.

If case is grounded, the circuit breaker shorts and lights go out.

Which do you prefer ?

Ch2. VII. Electrical Safety

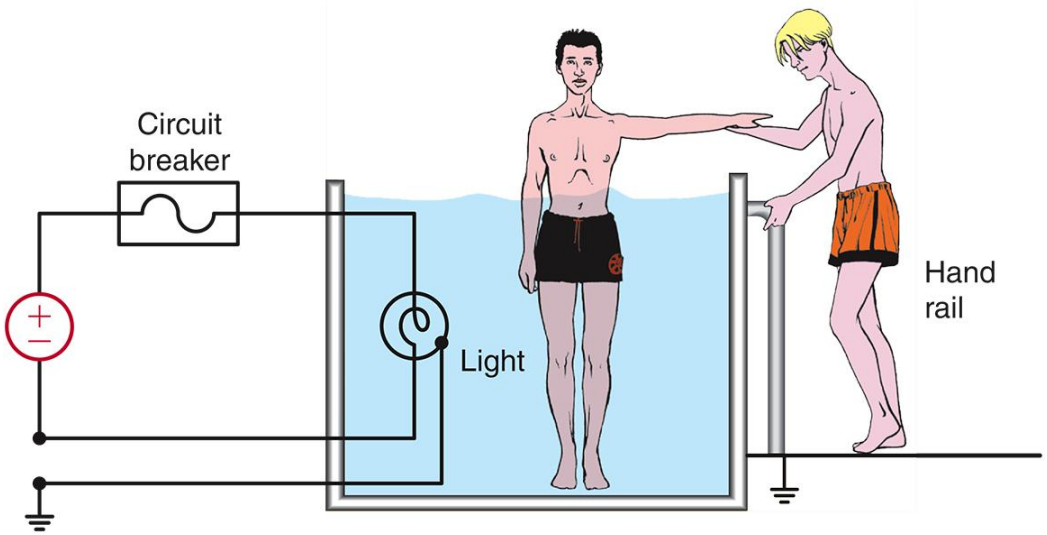

Boys in and near a pool. Ground fault in pool lighting. Vinyl lining of pool means water is electrically insulated.

One boy in pool and one outside.

If they touch and outside boy is grounded, who is more likely to die?

Answers: (A) Boy in pool
(B) Boy outside pool

Ch2. VII. Electrical Safety

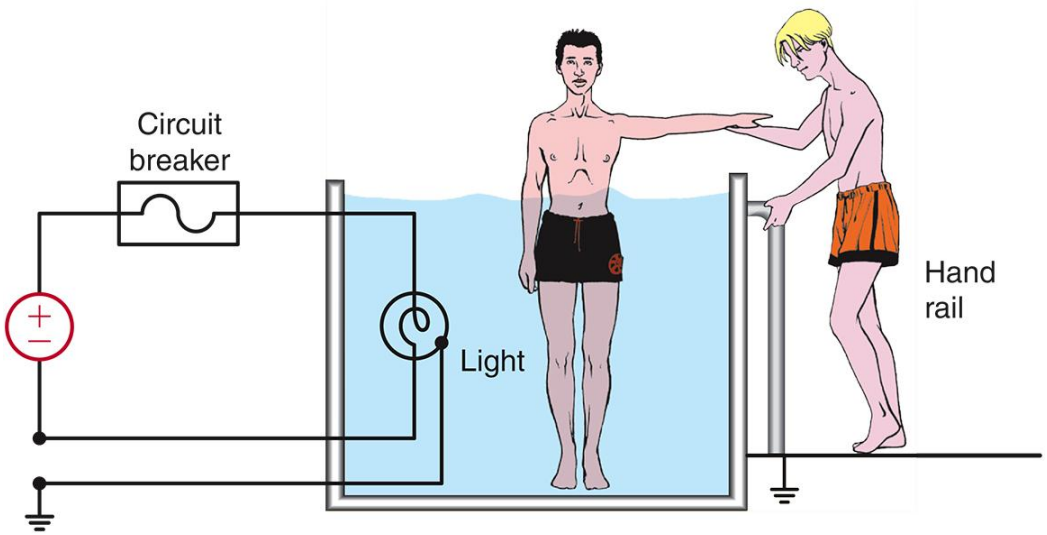

Boys in and near a pool. Ground fault in pool lighting. Vinyl lining of pool means water is electrically insulated.

One boy in pool and one outside.

If they touch and outside boy is grounded, who is more likely to die?

Outside boy, because current more likely to go through the heart.

Ch2. VII. Electrical Safety

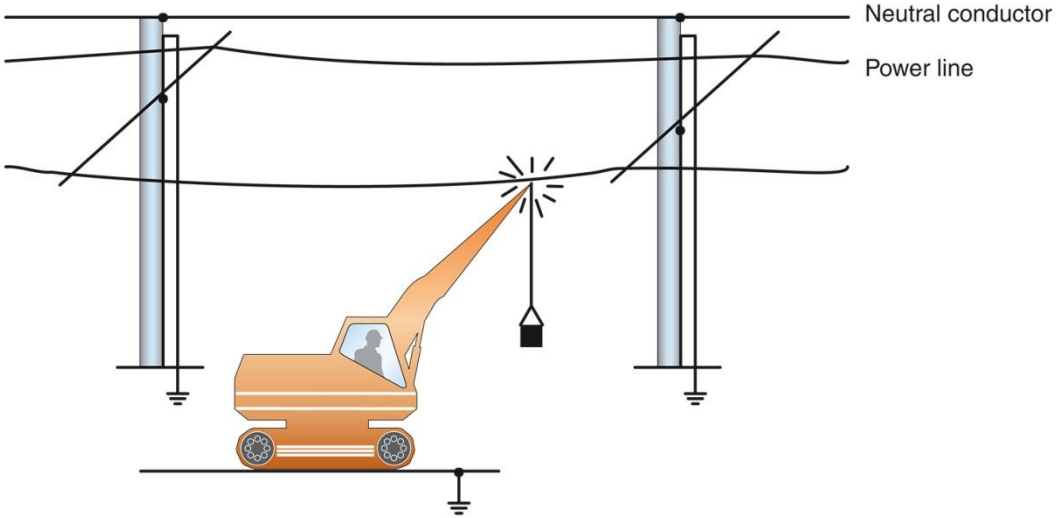

A crane operator touches high-voltage line at 7200 V. The crane is about 10 m from the pole which is earthed.

In one situation, the operator jumps out of the crane and runs toward the pole. In a second situation, the operator does not move. In which situation does the operator live?

Answers: (A) Operator not moving, standing still survives
(B) Operator running away survives

Ch2. VII. Electrical Safety

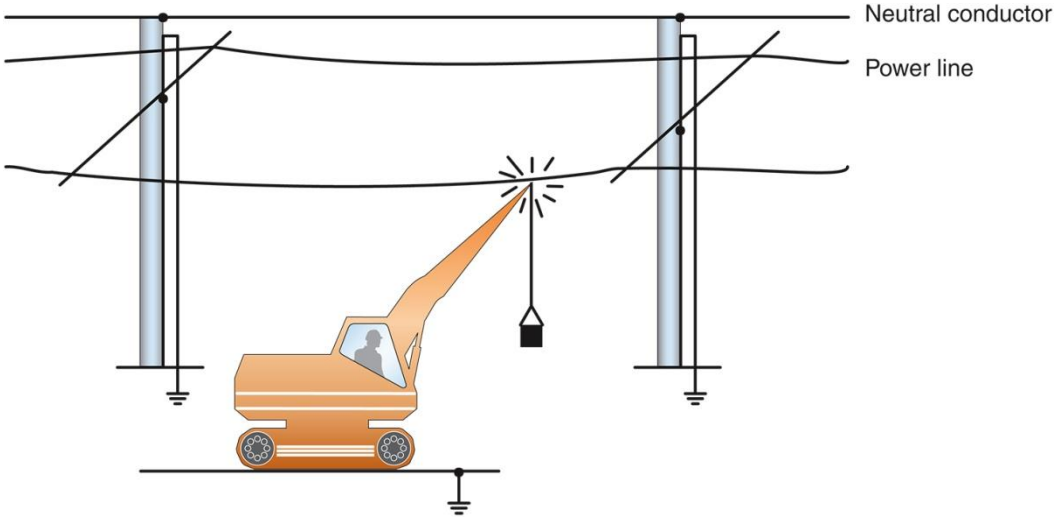

There is a 7200 V/10 m or 720 V/m potential gradient between the crane and the pole. If the man's running stride is 1 m, his body experiences 720 V. He dies, but a man standing still survives.

Ch3. I. Series Resistances

Consider the series combination of three resistances

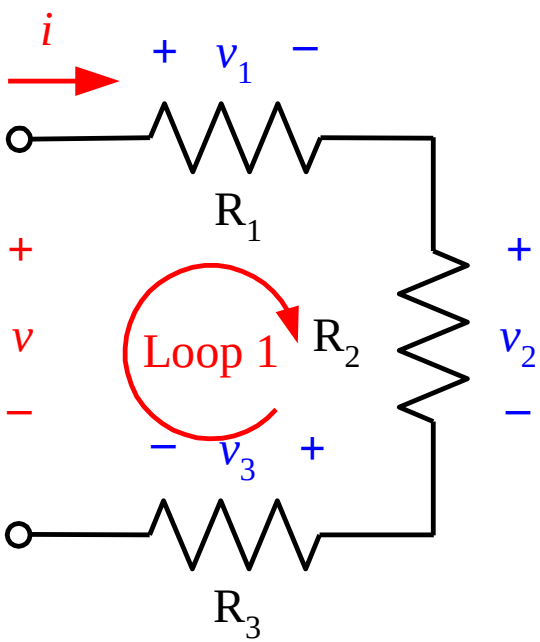

KVL for loop 1 (Voltage around loop is zero).

$$v - v_1 - v_2 - v_3 = 0 \Rightarrow v = v_1 + v_2 + v_3$$

Being in series, the current through the resistances is same. Think of water flowing through pipes – current has to be the same in all resistors.

$$\Rightarrow v_1 = R_1 i, v_2 = R_2 i, v_3 = R_3 i$$

$$\Rightarrow v = R_1 i + R_2 i + R_3 i$$

i.e. $v = R_{eq} i$ where $\boxed{R_{eq} = R_1 + R_2 + R_3}$

Ch3. I. Series Resistances

Consider the series combination of three resistances

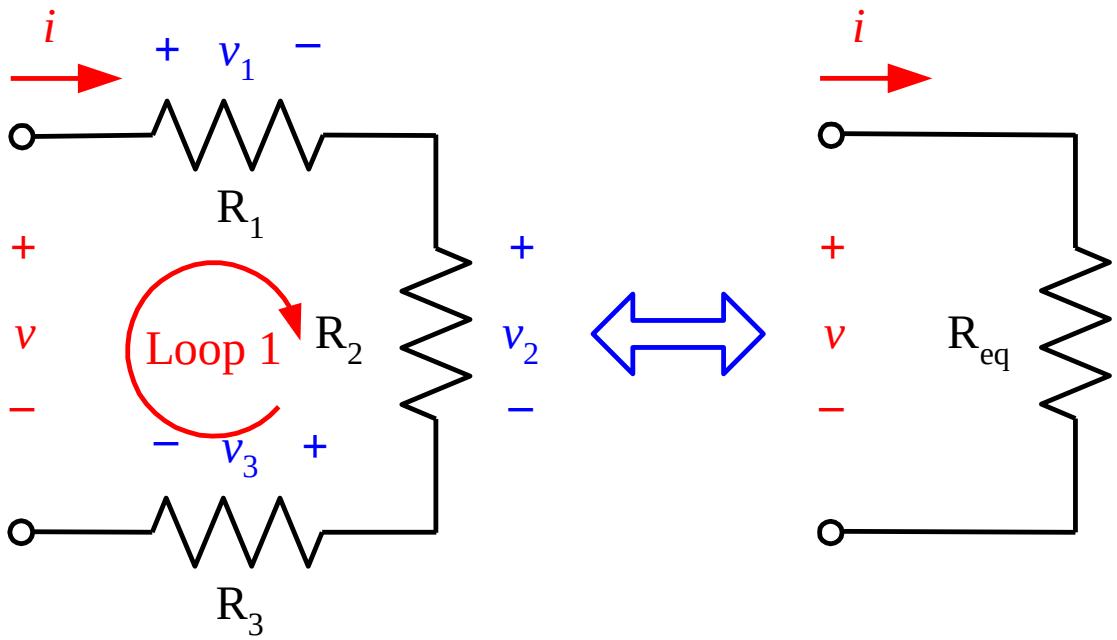

$$R_{eq} = R_1 + R_2 + R_3$$

As far as the rest of the circuit is concerned, its behavior would be same if the three resistances were replaced by an equivalent resistance shown above. Such circuits are called equivalent circuits.

Ch3. I. Series Resistances

Consider the series combination of many resistances

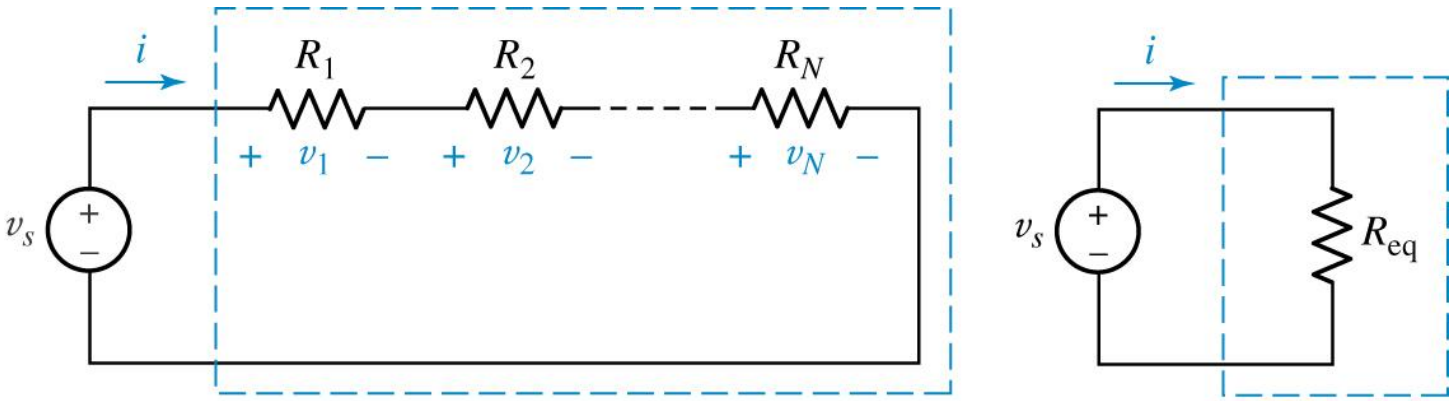

In general for N resistances in series we have $\boxed{R_{eq} = R_1 + R_2 + \cdots + R_N}$

Ch3. II. Parallel Resistances

Consider the parallel combination of three resistances (with conductance G_1, G_2, and G_3). $G_1 = 1/R_1, G_2 = 1/R_2, G_3 = 1/R_3$

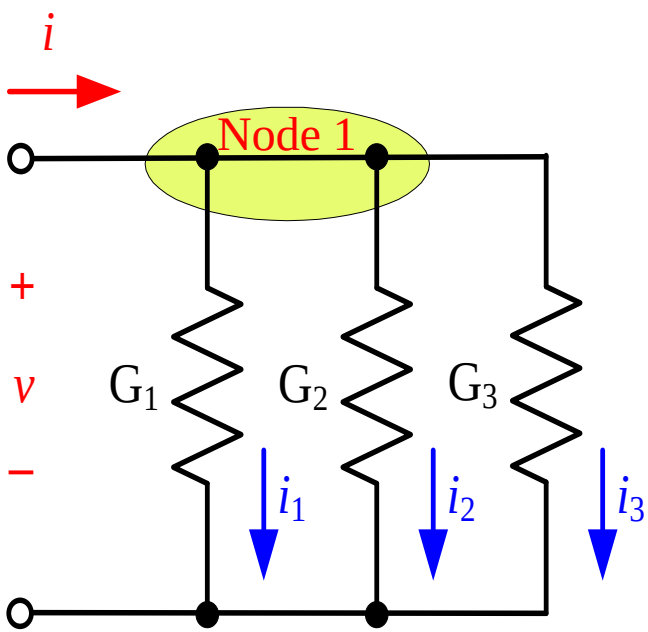

KCL for node 1: Sum of currents entering or leaving is zero.

$$i = i_1 + i_2 + i_3$$

Being in parallel, the voltage across the resistances is same and from Ohm's law:

$$\Rightarrow i_1 = G_1 v, i_2 = G_2 v, i_3 = G_3 v$$

$$\Rightarrow i = G_1 v + G_2 v + G_3 v$$

i.e. $i = G_{eq} v$ where $\boxed{G_{eq} = G_1 + G_2 + G_3}$

Ch3. II. Parallel Resistances

Consider the parallel combination of three resistances (with conductance G_1, G_2, and G_3). $G_1 = 1/R_1, G_2 = 1/R_2, G_3 = 1/R_3$

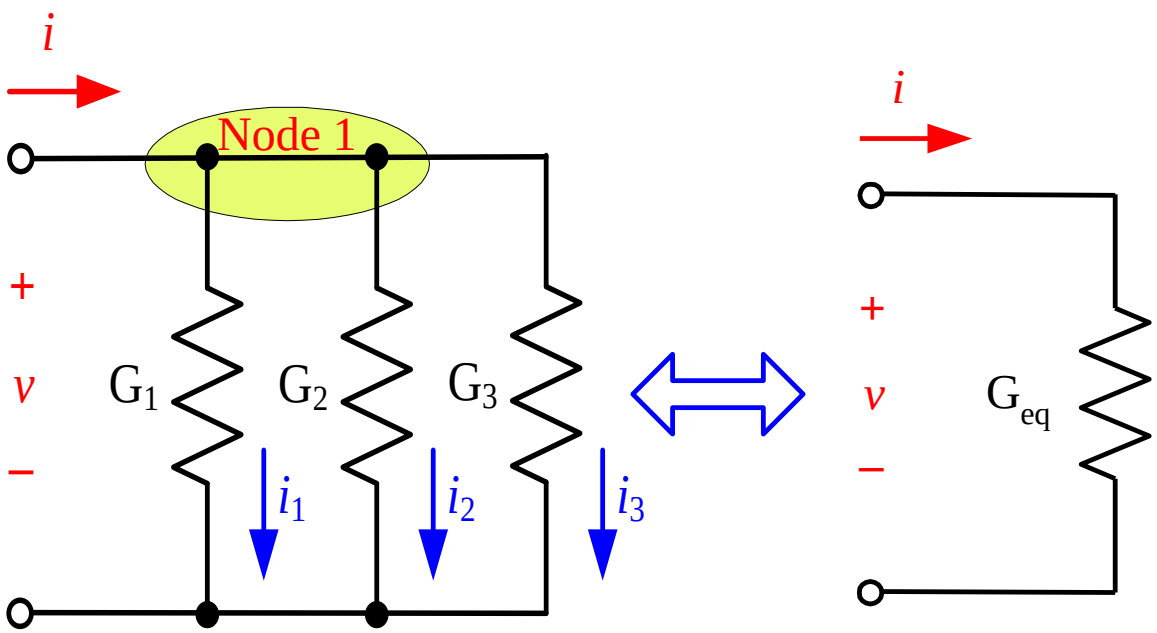

$$G_{eq} = G_1 + G_2 + G_3$$

$$\frac{1}{R_{eq}} = \frac{1}{R_1} + \frac{1}{R_2} + \frac{1}{R_3}$$

$$R_{eq} = \frac{1}{\frac{1}{R_1} + \frac{1}{R_2} + \frac{1}{R_3}}$$

As far as the rest of the circuit is concerned, its behavior would be same if the three resistances were replaced by an equivalent resistance shown above. Such circuits are called equivalent circuits.

Ch3. II. Parallel Resistances

Consider the parallel combination of many resistances

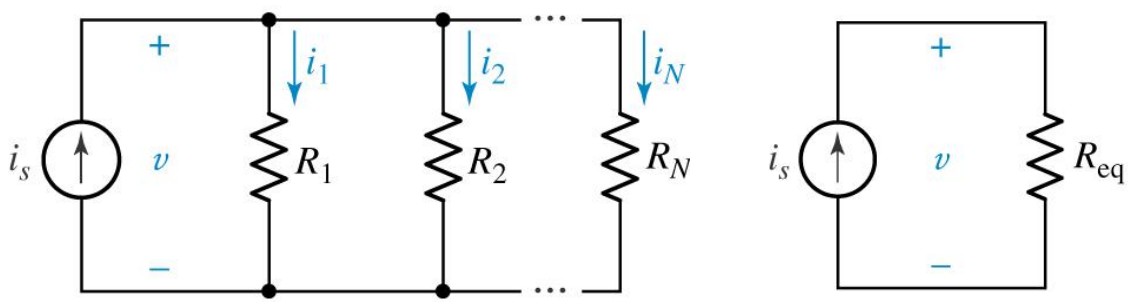

In general for N resistances in parallel we have:

$$\boxed{G_{eq} = G_1 + G_2 + \cdots + G_N} \Leftrightarrow \boxed{R_{eq} = \left(\frac{1}{R_1} + \frac{1}{R_2} + \cdots + \frac{1}{R_N} \right)^{-1}}$$

Ch3. II. Parallel Resistances

Consider the parallel combination of two resistances

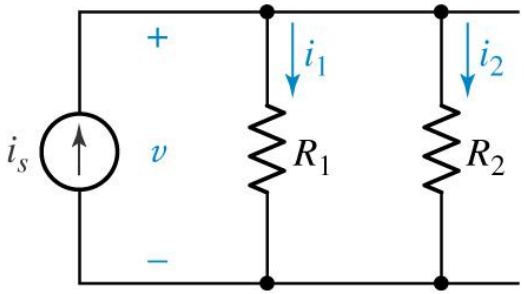

A special case worth remembering is

$$R_{eq} = R_1 \| R_2 = \frac{1}{\frac{1}{R_1} + \frac{1}{R_2}}$$

$$\boxed{R_{eq} = \frac{R_1 R_2}{R_1 + R_2}}$$

Note that a short-hand for circuit elements in parallel is to use: ||

Ch3. II. Parallel Resistances

What is the equivalent resistance ?

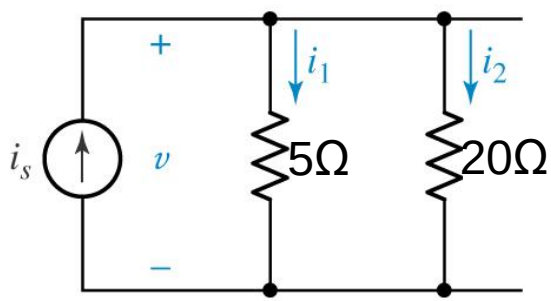

Answer:

(A) 5Ω
(B) 2Ω
(C) 25Ω
(D) 4Ω

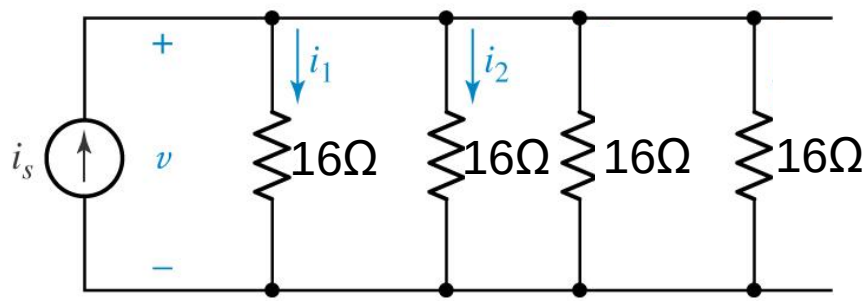

Answer:

(A) 8Ω
(B) 32Ω
(C) 64Ω
(D) 4Ω

Ch3. II. Parallel Resistances

What is the equivalent resistance ?

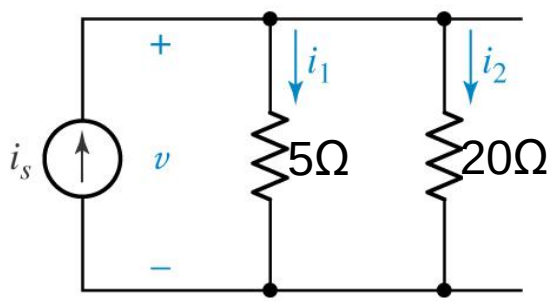

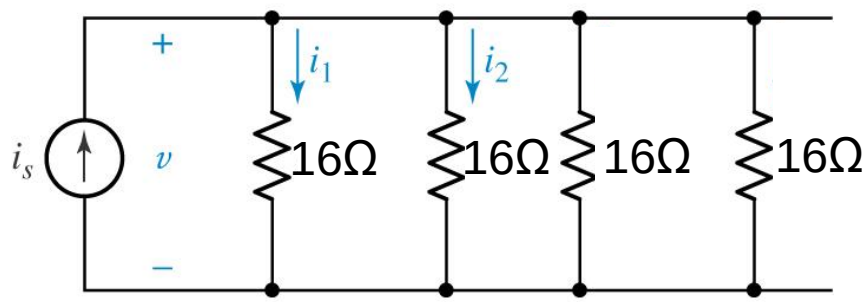

Answer:

(D) 4Ω

Answer:

(D) 4Ω

Ch3. III. Series and Parallel Resistances

Example 1: Find the single equivalent resistance for the network

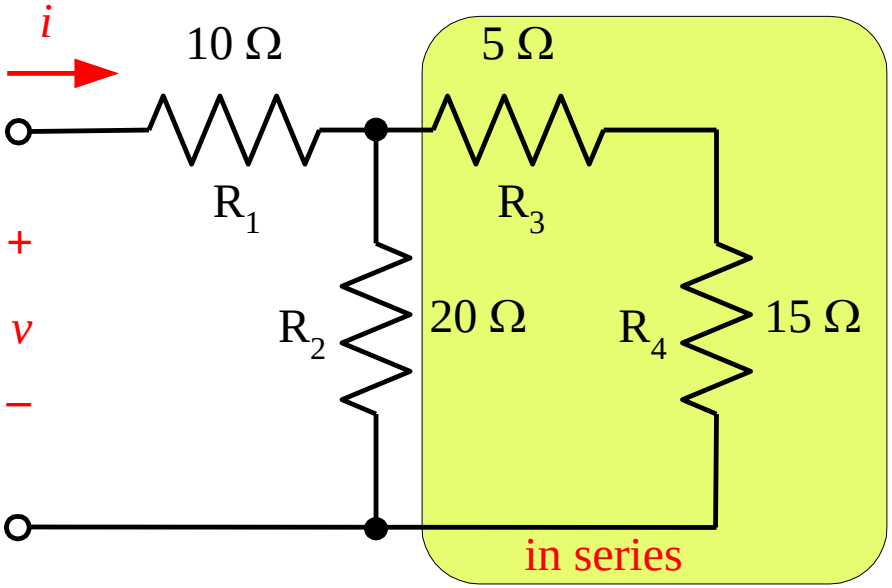

1. R_3 and R_4 are in series and can be replaced by R_{eq1}

$$R_{eq1} = R_3 + R_4 = 20\ \Omega$$

Ch3. III. Series and Parallel Resistances

Example 1: Find the single equivalent resistance for the network

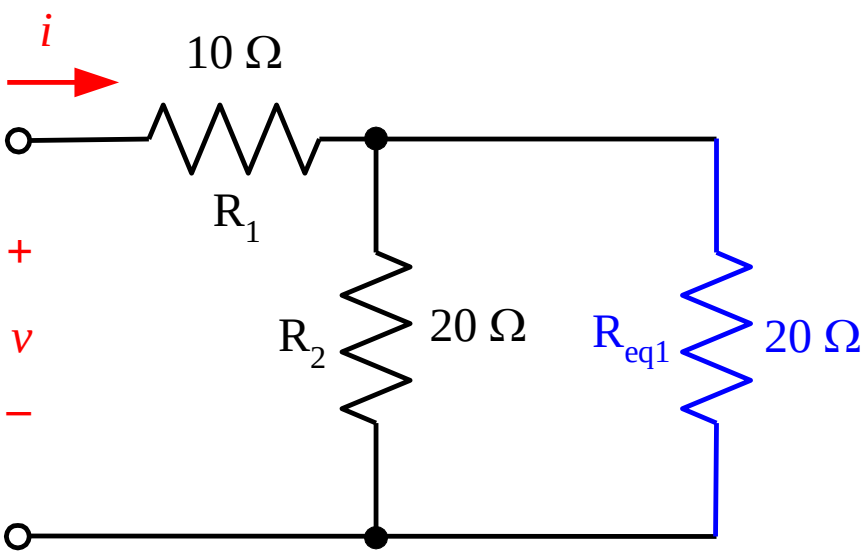

Ch3. III. Series and Parallel Resistances

Example 1: Find the single equivalent resistance for the network

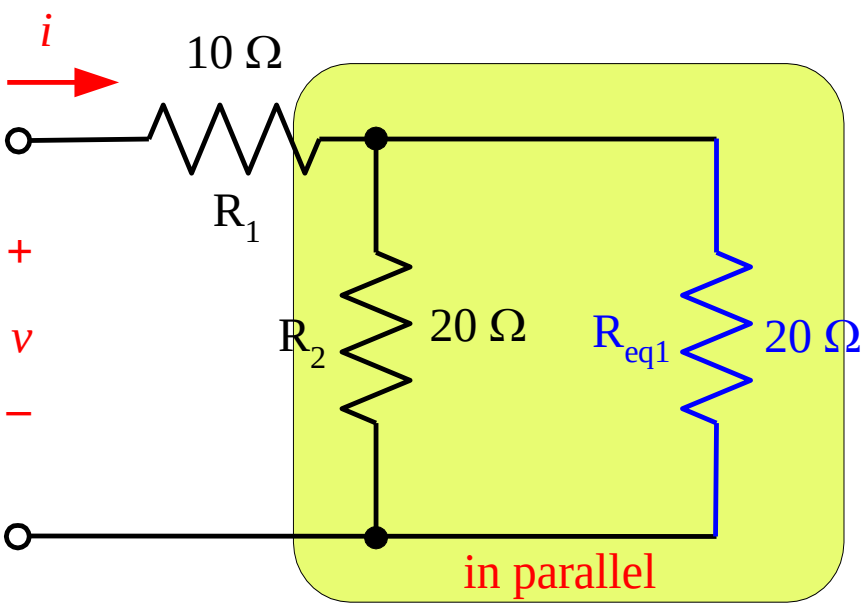

2. R_2 and R_{eq1} are in parallel and can be replaced by R_{eq2}

$$R_{eq2} = \left(\frac{1}{R_2} + \frac{1}{R_{eq1}} \right)^{-1}$$

$$= \left(\frac{1}{20} + \frac{1}{20} \right)^{-1}$$

$$= 10\ \Omega$$

Ch3. III. Series and Parallel Resistances

Example 1: Find the single equivalent resistance for the network

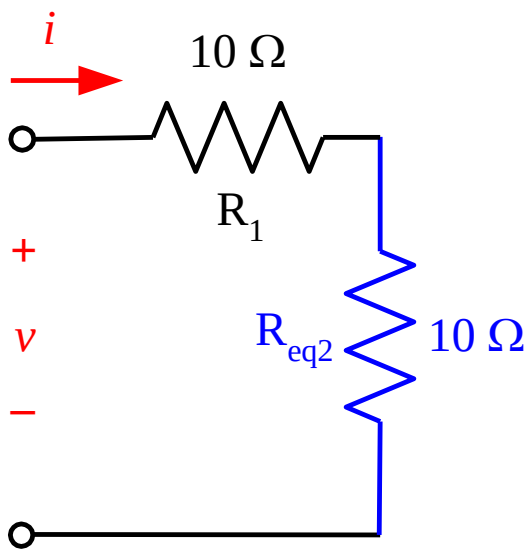

Ch3. III. Series and Parallel Resistances

Example 1: Find the single equivalent resistance for the network

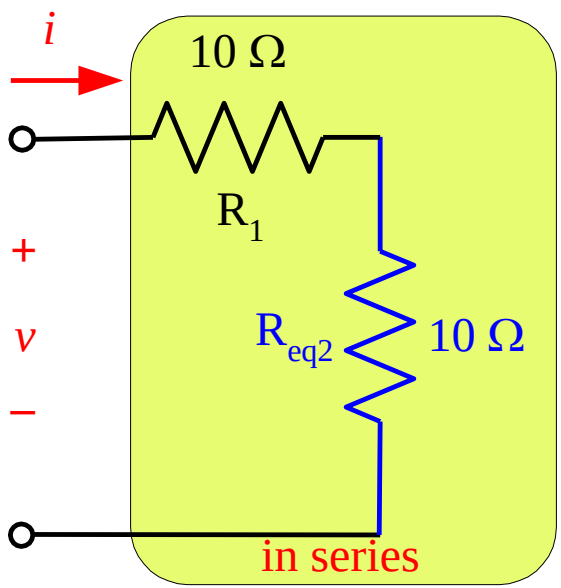

3. R_1 and R_{eq2} are in series and can be replaced by R_{eq}

$$R_{eq} = R_1 + R_{eq2} = 20\ \Omega$$

Ch3. III. Series and Parallel Resistances

Example 1: Find the single equivalent resistance for the network

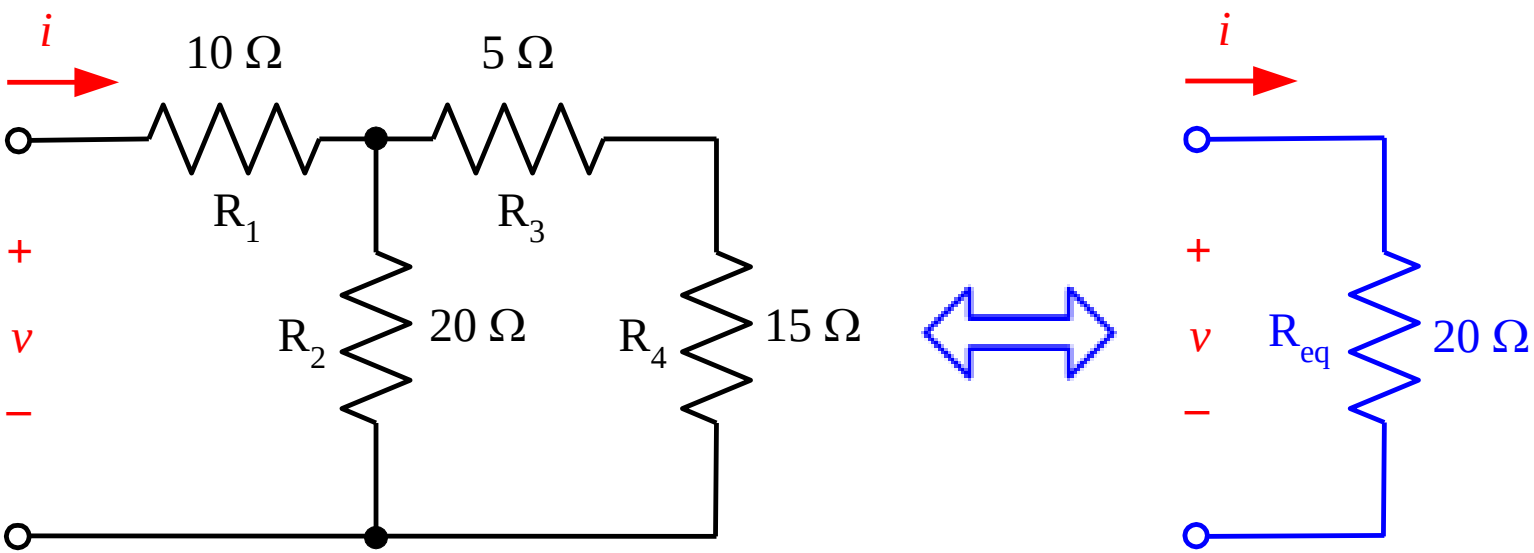

Ch3. III. Series and Parallel Resistances

Example 2: Find the single equivalent resistance for the network

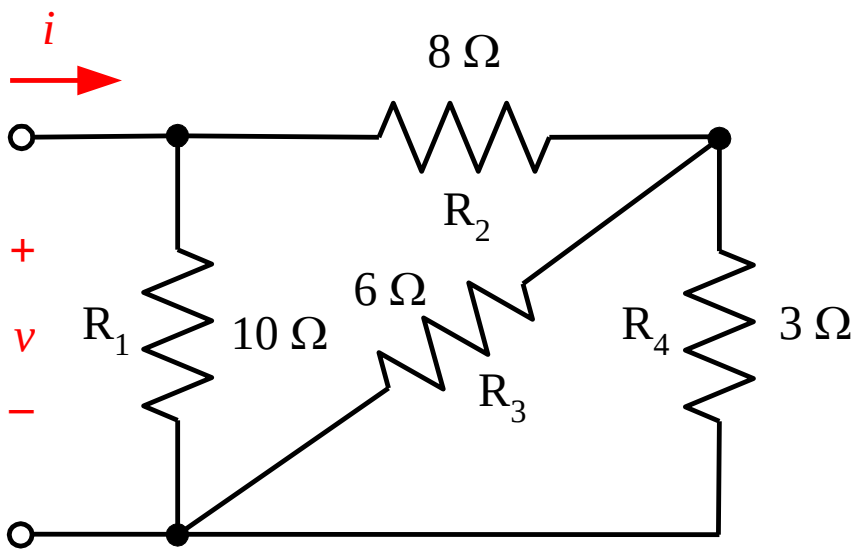

Ch3. III. Series and Parallel Resistances

Example 2: Find the single equivalent resistance for the network

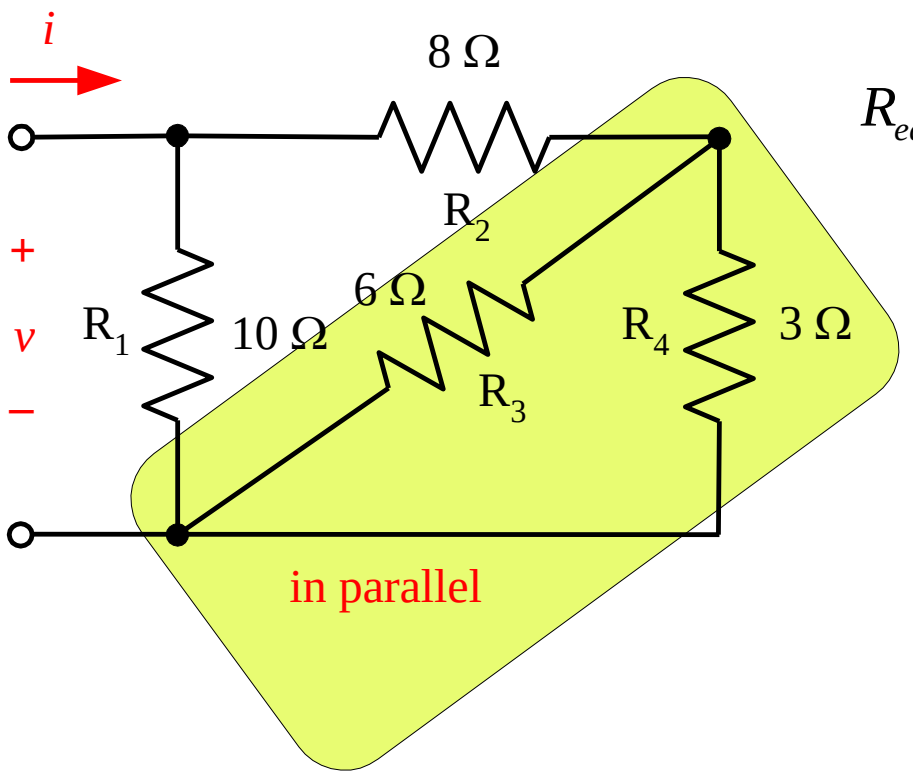

1. R_3 and R_4 are in parallel and can be replaced by R_{eq1}

$$R_{eq1} = \left(\frac{1}{R_3} + \frac{1}{R_4}\right)^{-1} = \left(\frac{1}{6} + \frac{1}{3}\right)^{-1} = 2\ \Omega$$

Ch3. III. Series and Parallel Resistances

Example 2: Find the single equivalent resistance for the network

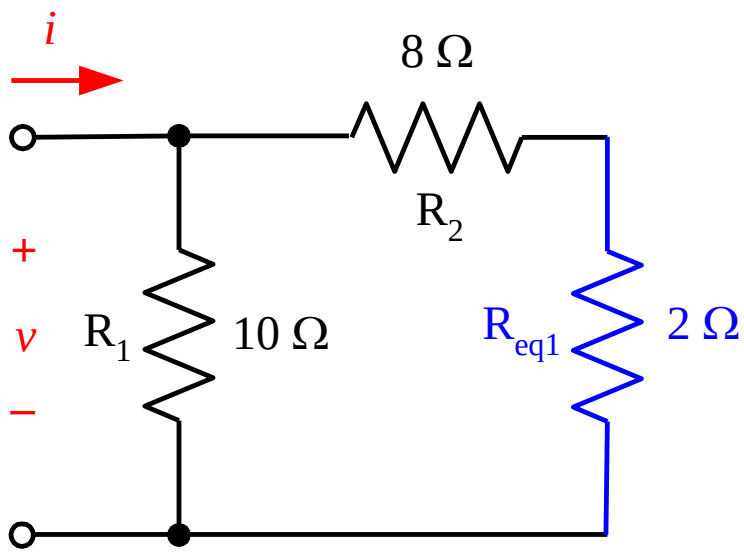

Ch3. III. Series and Parallel Resistances

Example 2: Find the single equivalent resistance for the network

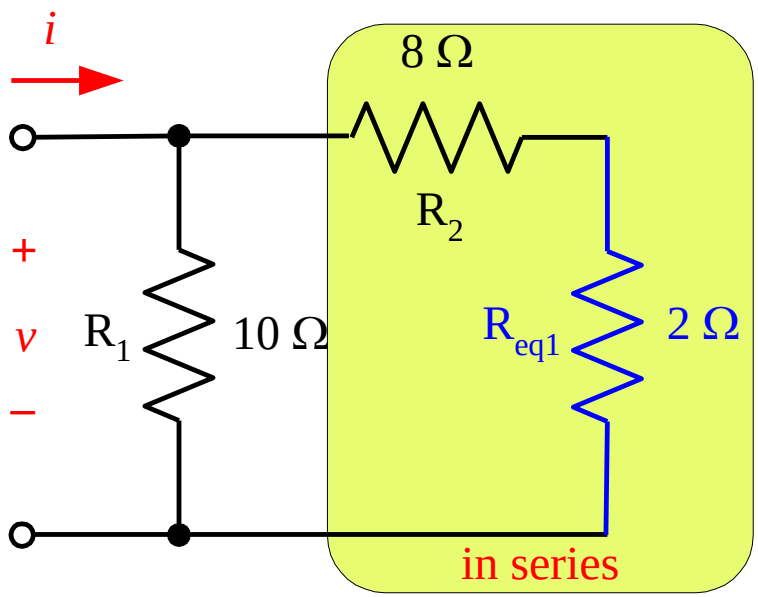

2. R_2 and R_{eq1} are in series and can be replaced by R_{eq2}

$$R_{eq2} = R_2 + R_{eq1} = 10\ \Omega$$

Ch3. III. Series and Parallel Resistances

Example 2: Find the single equivalent resistance for the network

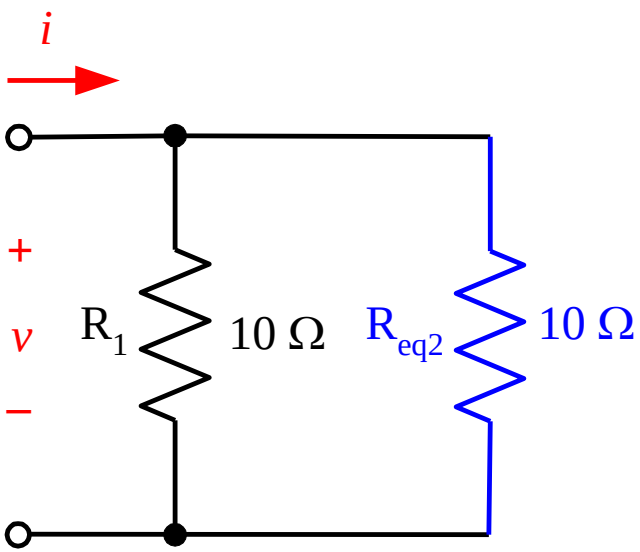

Ch3. III. Series and Parallel Resistances

Example 2: Find the single equivalent resistance for the network

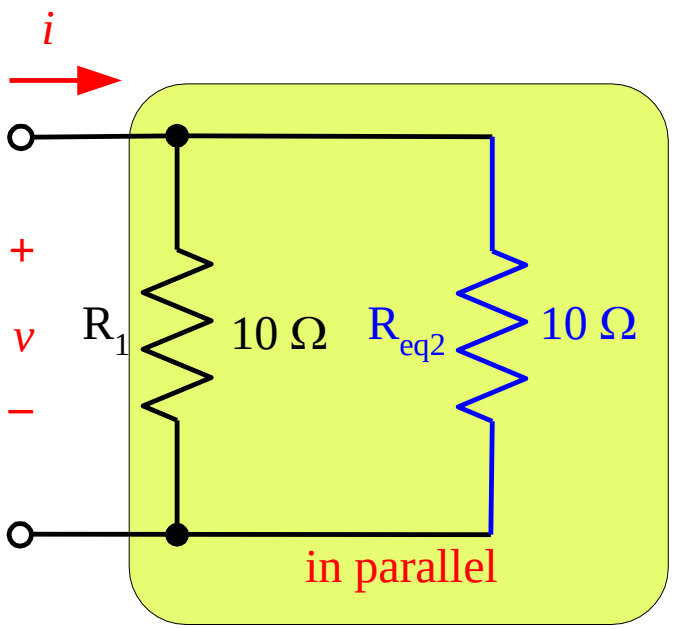

3. R_1 and R_{eq2} are in parallel and can be replaced by R_{eq}

$$R_{eq} = \left(\frac{1}{R_1} + \frac{1}{R_{eq2}} \right)^{-1}$$

$$= \left(\frac{1}{10} + \frac{1}{10} \right)^{-1} = 5\ \Omega$$

Ch3. III. Series and Parallel Resistances

Example 2: Find the single equivalent resistance for the network

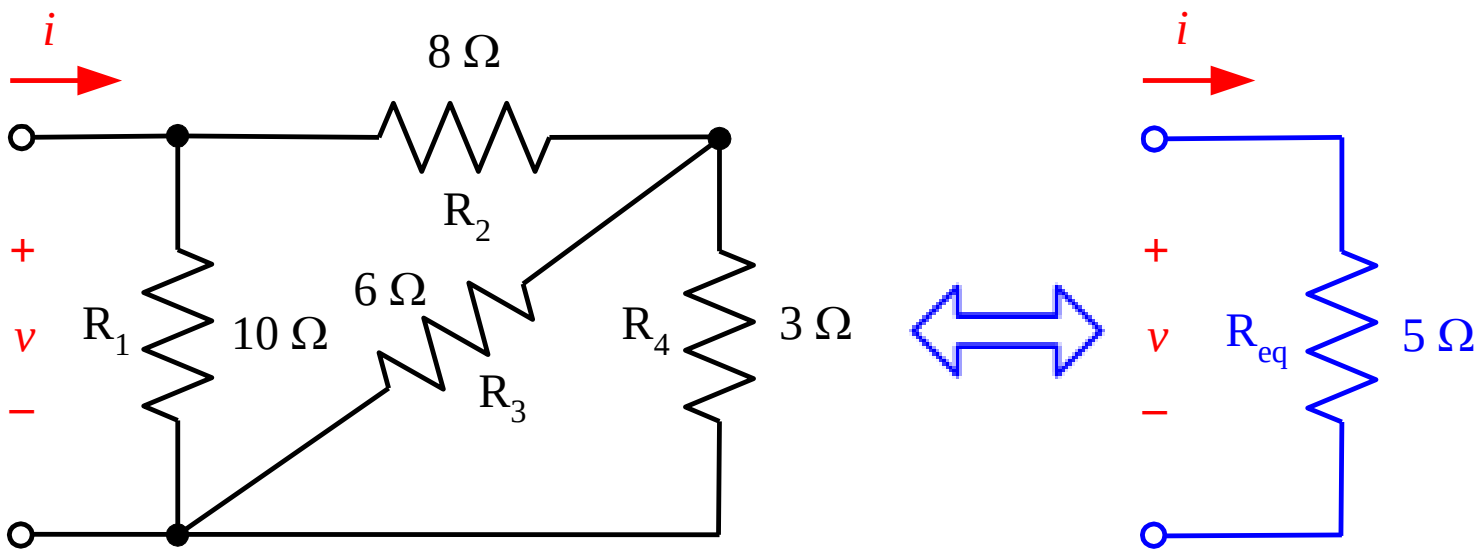

Ch3. III. Series and Parallel Resistances

1. Begin by locating a combination of resistances that are in series or parallel (make sure the circuit section you are simplifying only has two terminals, and the resistors really are connected in series or parallel). Often the place to start is farthest from the source.
   Remark: Independent sources can also be combined: (a) for voltage sources in series add voltage (accounting for sign), and (b) for current sources in parallel add current (accounting for sign).
2. Redraw the circuit with the equivalent resistance for the combination found in step 1.
3. Repeat steps 1 and 2 until the circuit is reduced as far as possible. Often (but not always) we end up with a single source and a single resistance.
4. Solve for the currents and voltages in the final equivalent circuit. Then, transfer results back (one step at a time) and solve for additional unknown currents and voltages.

If dependent sources are present, you may not be able to use this method. Later we learn, node voltage and mesh current analysis (that are always applicable).

Ch3. III. Series and Parallel Resistances

Find the current and voltages for each element in the network

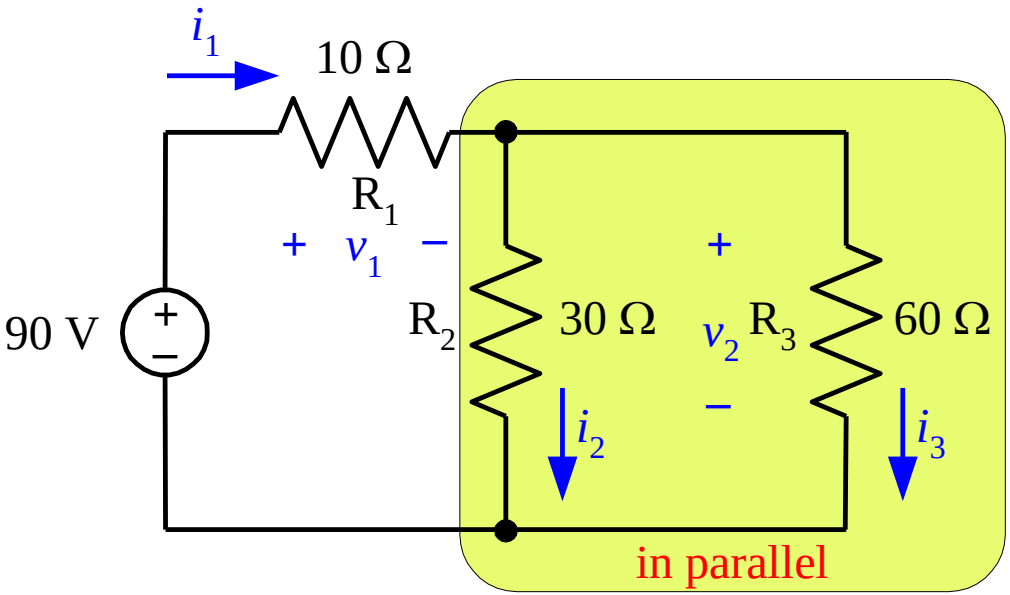

1. R_2 and R_3 are in parallel and can be replaced by R_{eq1}

$$R_{eq1} = \left(\frac{1}{R_2} + \frac{1}{R_3}\right)^{-1} = \left(\frac{1}{30} + \frac{1}{60}\right)^{-1} = 20\ \Omega$$

Ch3. III. Series and Parallel Resistances

Find the current and voltages for each element in the network

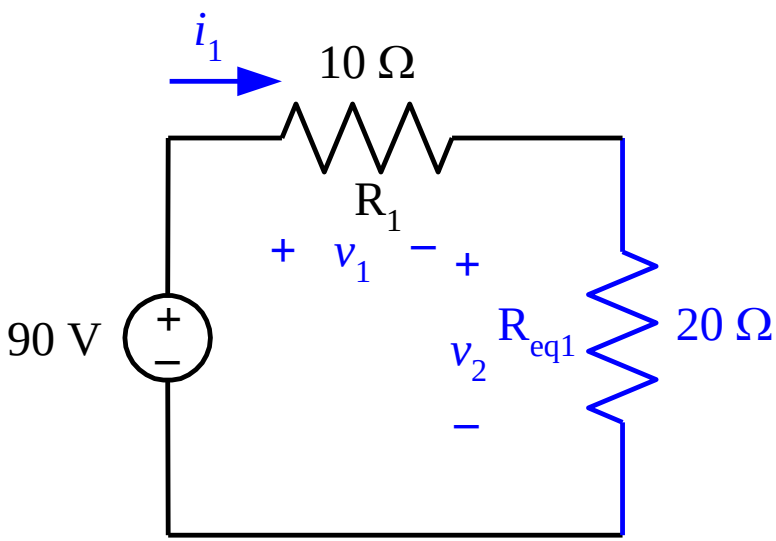

Ch3. III. Series and Parallel Resistances

Find the current and voltages for each element in the network

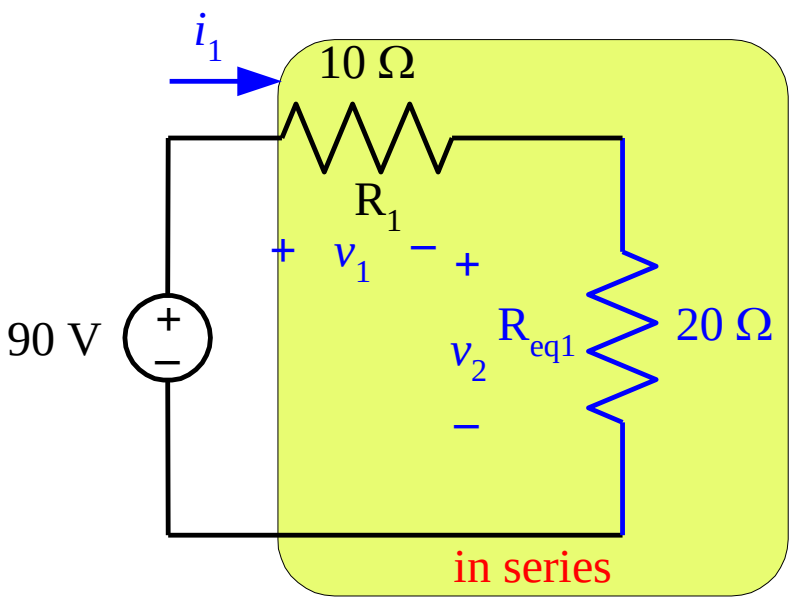

2. R_1 and R_{eq1} are in series and can be replaced by R_{eq}

$$R_{eq} = R_1 + R_{eq1} = 30\ \Omega$$

Ch3. III. Series and Parallel Resistances

Find the current and voltages for each element in the network

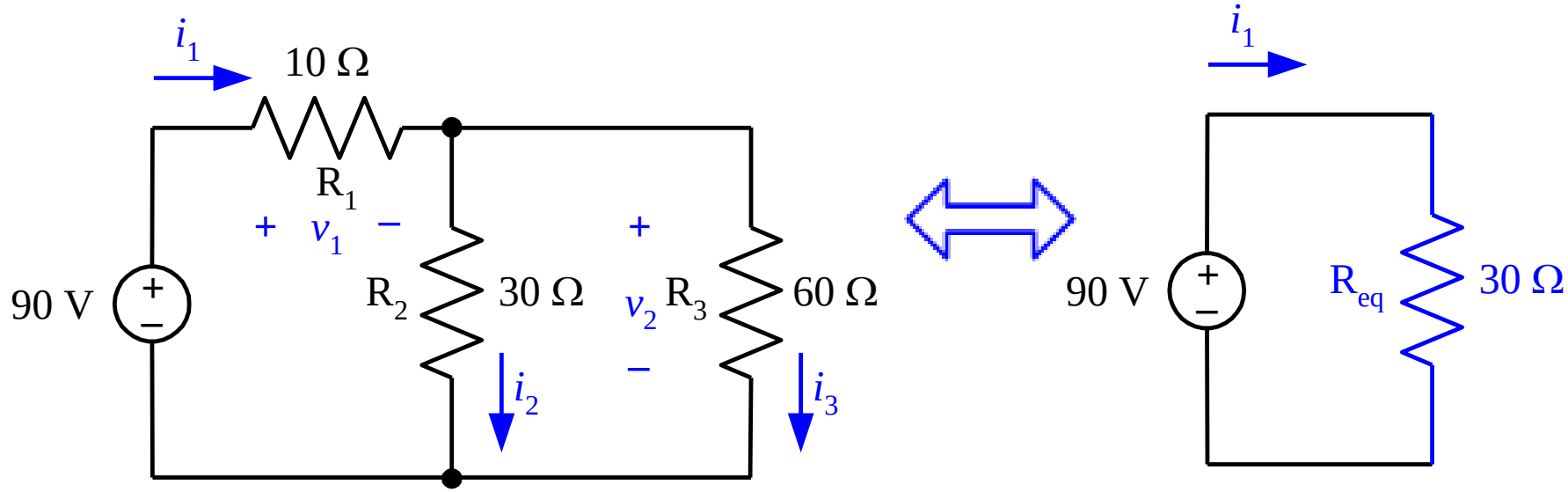

3. KVL and Ohm's law $\Rightarrow i_1 = 90 / R_{eq} = 3\ \text{A}$

4. From original circuit and Ohm's law

$$v_1 = R_1 i_1 = 30\ \text{V} \text{ and } v_2 = R_{eq1} i_1 = 60\ \text{V}$$

5. From original circuit and Ohm's law

$$i_2 = v_2 / R_2 = 2\ \text{A} \text{ and } i_3 = v_2 / R_3 = 1\ \text{A}$$

Ch3. IV. Voltage Divider Circuits

Consider the series combination of three resistances. Instead of thinking in terms of equivalent resistance, we want to think in terms of circuit design and function.

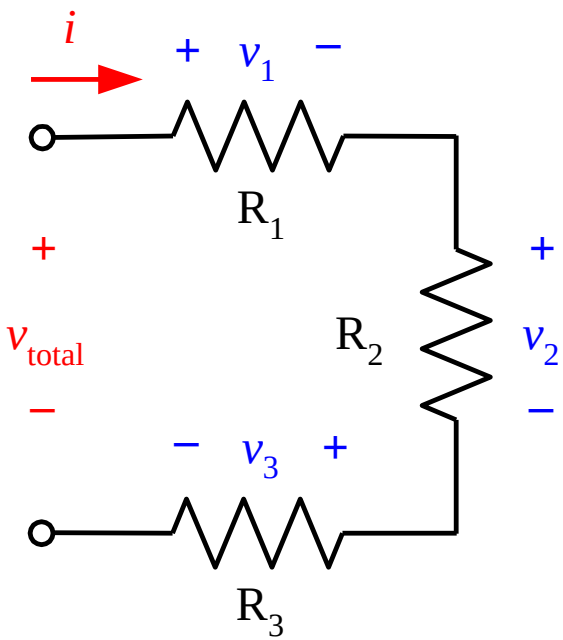

The current i is given by

$$i = \frac{v_{total}}{R_{eq}} \quad \text{where } R_{eq} = R_1 + R_2 + R_3$$

Consider how the total voltage is divided among different resistors (remember $v_{total}=v_1+v_2+v_3$)

$$v_1 = R_1 i = \left(\frac{R_1}{R_{eq}}\right) v_{total},$$

$$v_2 = R_2 i = \left(\frac{R_2}{R_{eq}}\right) v_{total},$$

$$v_3 = R_3 i = \left(\frac{R_3}{R_{eq}}\right) v_{total}$$

Circuit function is Voltage Division

As far as the rest of the circuit is concerned, the three resistances can be replaced by an equivalent resistance R_{eq} (see slide 95).

Ch3. IV. Voltage Divider Circuits

Let R_1=1 Ω, R_2=1 Ω, R_3=2 Ω, then

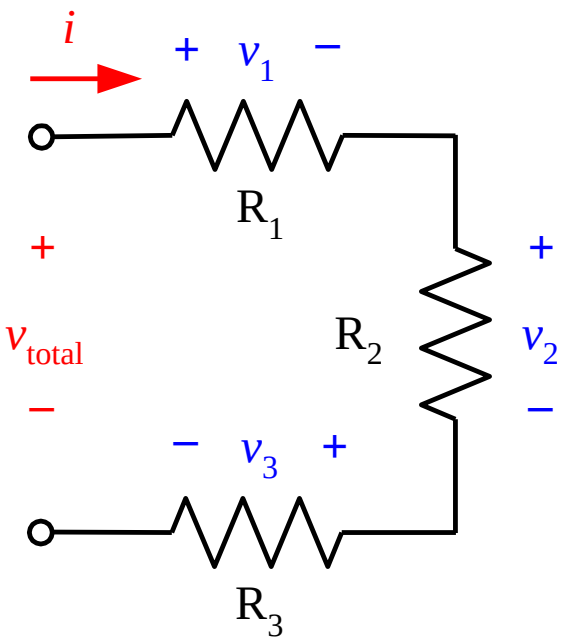

$$v_1 = R_1 i = \left(\frac{R_1}{R_{eq}}\right) v_{total}, \qquad v_1 = \left(\frac{1}{4}\right) v_{total},$$

$$v_2 = R_2 i = \left(\frac{R_2}{R_{eq}}\right) v_{total}, \qquad v_2 = \left(\frac{1}{4}\right) v_{total},$$

$$v_3 = R_3 i = \left(\frac{R_3}{R_{eq}}\right) v_{total} \qquad v_3 = \left(\frac{1}{2}\right) v_{total}$$

$$\frac{R_1}{R_{eq}} = \frac{1}{1+1+2} = \frac{1}{4}$$

Note that the voltage division depends only on the relative values of the resistors.

Ch3. IV. Voltage Divider Circuits

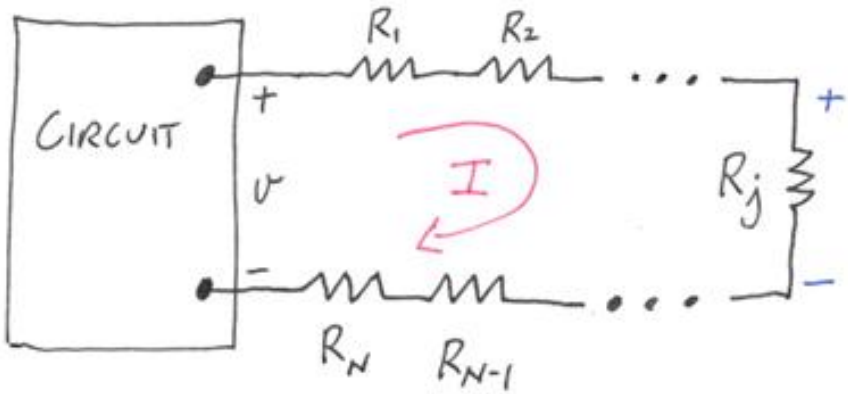

In general for N resistances in series we have

$$v_k = \left(\frac{R_k}{R_{eq}}\right) v_{total} \quad \text{for } k = 1, \cdots, N$$

i.e. component voltages are proportional to their resistance and $R_{eq} = R_1 + R_2 + \cdots + R_N$

Ch3. V. Current Divider Circuits

Consider the parallel combination of three resistances, again we want to think in terms of circuit function.

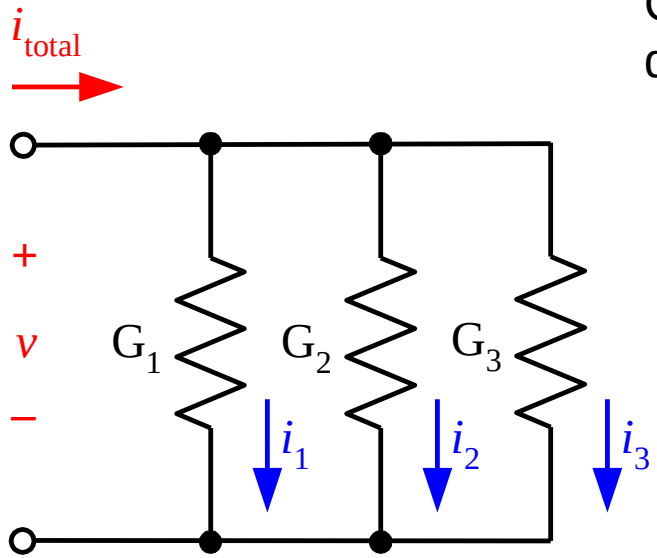

The voltage v is given by:

$$v = \frac{i_{total}}{G_{eq}} \quad \text{where } G_{eq} = G_1 + G_2 + G_3$$

Consider how the total current is divided among different resistors (remember $i_{total}=i_1+i_2+i_3$)

Circuit function is Current Division

$$i_1 = G_1 v = \left(\frac{G_1}{G_{eq}}\right) i_{total},$$

$$i_2 = G_2 v = \left(\frac{G_2}{G_{eq}}\right) i_{total},$$

$$i_3 = G_3 i = \left(\frac{G_3}{G_{eq}}\right) i_{total}$$

As far as the rest of the circuit is concerned, the three resistances can be replaced by an equivalent conductance G_{eq} (or resistance R_{eq}, see slide 97).

Ch3. V. Current Divider Circuits

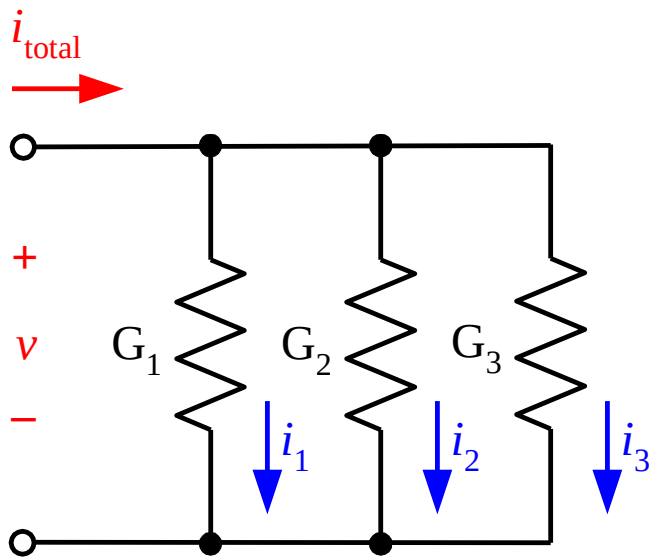

Let R_1=2 Ω, R_2=4 Ω, R_3=6 Ω then

$$i_1 = G_1 v = \left(\frac{G_1}{G_{eq}}\right) i_{total}, \qquad i_1 = \left(\frac{6}{11}\right) i_{total},$$

$$i_2 = G_2 v = \left(\frac{G_2}{G_{eq}}\right) i_{total}, \qquad i_1 = \left(\frac{3}{11}\right) i_{total},$$

$$i_3 = G_3 i = \left(\frac{G_3}{G_{eq}}\right) i_{total} \qquad i_1 = \left(\frac{2}{11}\right) i_{total},$$

$$\frac{G_1}{G_{eq}} = \frac{\frac{1}{2}}{\frac{1}{2}+\frac{1}{4}+\frac{1}{6}} = \frac{6}{6+3+2} = \frac{6}{11}$$

Note that the current division depends only on the relative values of the resistors.

Ch3. V. Current Divider Circuits

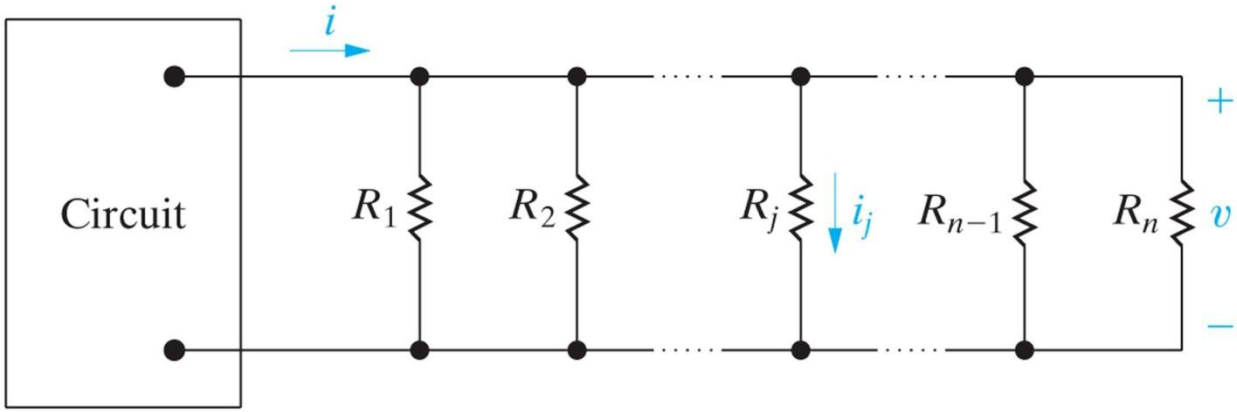

In general for N resistances in parallel we have

$$i_k = \left(\frac{G_k}{G_{eq}}\right) i_{total} \quad \text{for } k = 1, \cdots, N$$

i.e. component currents are inversely proportional to their resistance

and $G_{eq} = G_1 + G_2 + \cdots + G_N$

Ch3. V. Voltage and Current Division

Example 2: Find v_x and i_2, i_3.

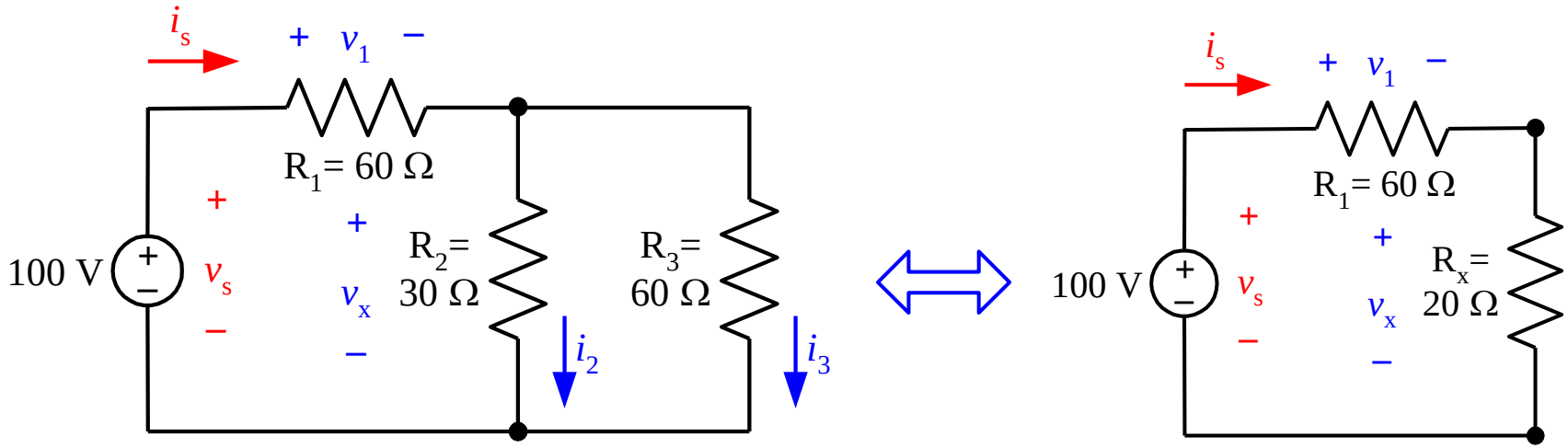

First of all note that we can replace R_2, R_3 with an equivalent resistance R_x (see slide 103)

$$R_x = \left(\frac{1}{R_2} + \frac{1}{R_3}\right)^{-1} = \left(\frac{1}{30} + \frac{1}{60}\right)^{-1} = 20\ \Omega$$

From the voltage division principle:

$$v_x = \left(\frac{R_x}{R_1 + R_x}\right) v_s = \frac{(20)}{(80)}(100) = 25\ \text{V}$$

Ch3. V. Voltage and Current Division

Example 2: Find v_x and i_2, i_3.

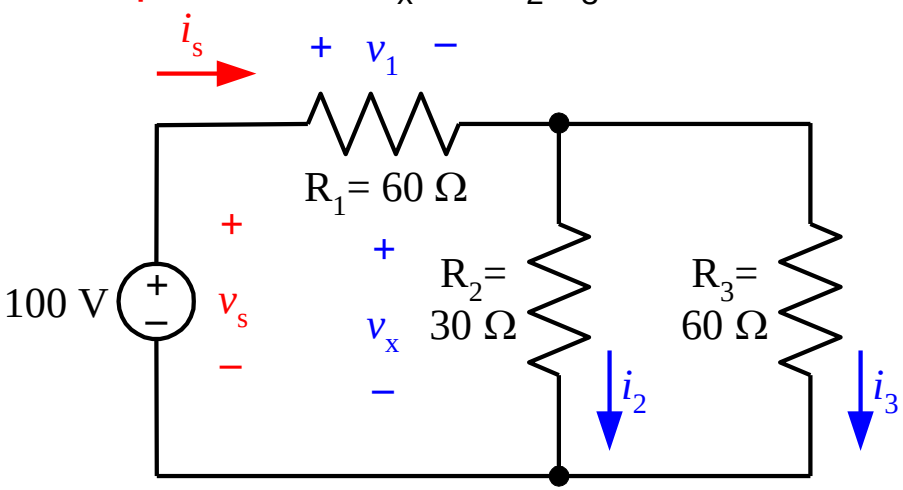

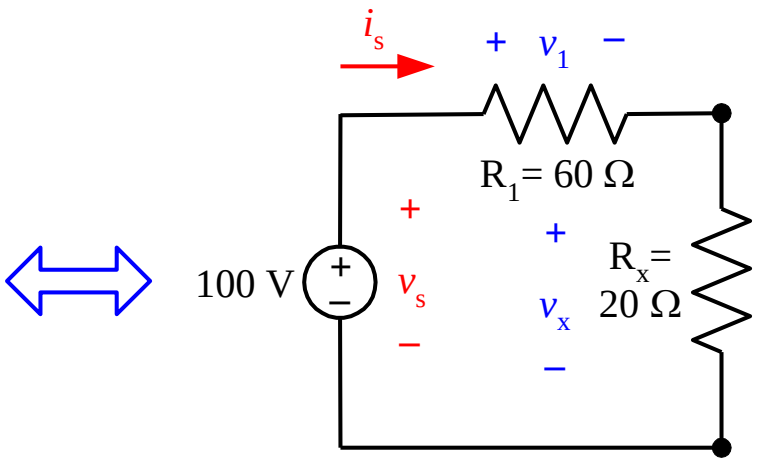

For the current i_s:

$$i_s = \frac{v_s}{R_1 + R_x} = (100)/(80) = 1.25 \text{ A}$$

From current division:

$$i_2 = \left(\frac{G_2}{G_x}\right) i_s = \frac{(1/30)}{(1/20)}(1.25) = \frac{5}{6} \text{ A}$$

$$i_3 = \left(\frac{G_3}{G_x}\right) i_s = \frac{(1/60)}{(1/20)}(1.25) = \frac{5}{12} \text{ A}$$

Ch3. V. Voltage and Current Division

Example 3: Find v_0 and i_0.

Use current division to find i_0

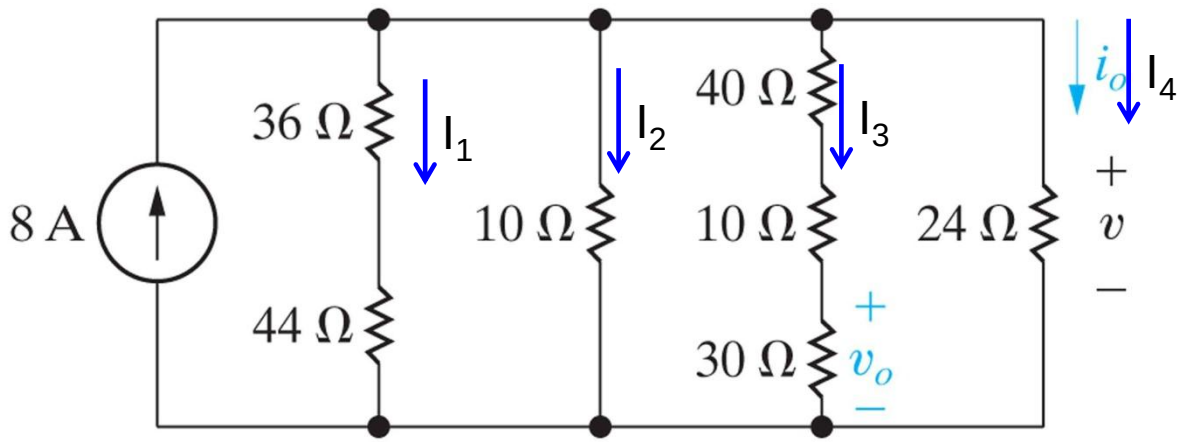

x 240/240

$$I_4 = \frac{\frac{1}{24}}{\frac{1}{80}+\frac{1}{10}+\frac{1}{80}+\frac{1}{24}}\left(8[\mathrm{A}]\right) = \frac{10}{3+24+3+10}\left(8[\mathrm{A}]\right) = \frac{10}{40}(8) = 2[\mathrm{A}]$$

Ch3. V. Voltage and Current Division

Example 3: Find v_0 and i_0.

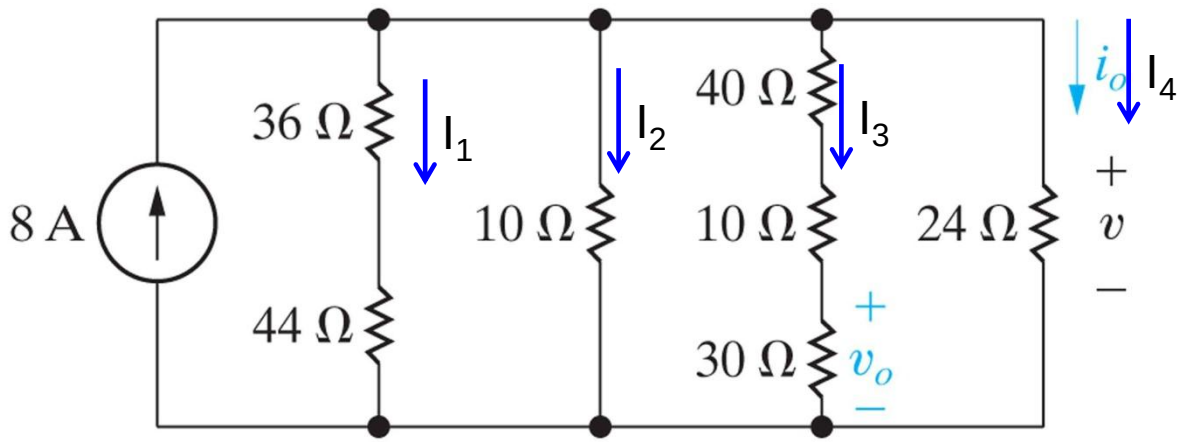

Use voltage division to find v_0

(I_4 = 2[A] – previous slide)

$$v_0 = I_4 24 \frac{30}{80} = 2(24)\frac{30}{80} = 48\frac{30}{80} = 18[\mathrm{V}]$$

Ch3. V. Voltage and Current Division – Simple Resistor Divider

You have a 6-volt battery (assumed ideal) and a 1.5-volt flashlight bulb, which is known to draw $0.5A$ when the bulb voltage is $1.5V$ (see figure below). Design a network of resistors to go between the battery and the bulb to give $v_s = 1.5V$ when the bulb is connected, yet ensures that v_s does not rise above $2V$ when the bulb is disconnected.

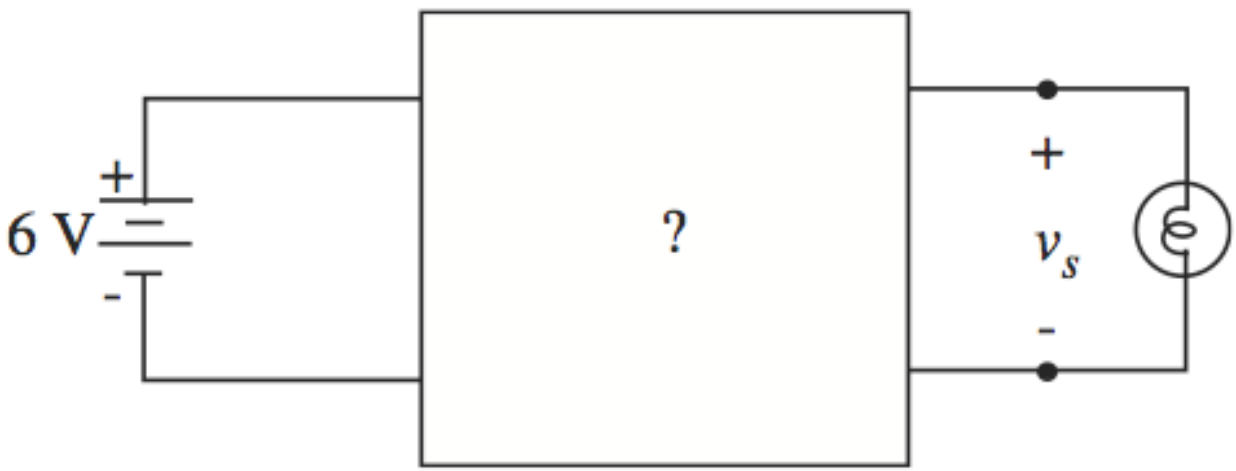

Ch3. V. Voltage and Current Division – Simple Resistor Divider

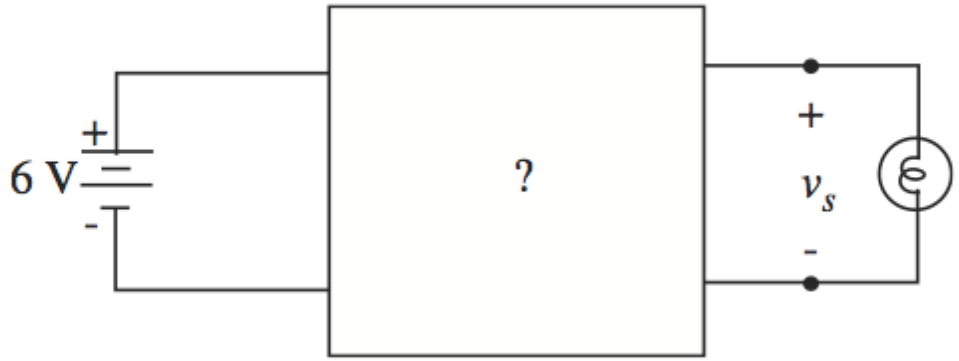

Find R_1, R_2, R_L

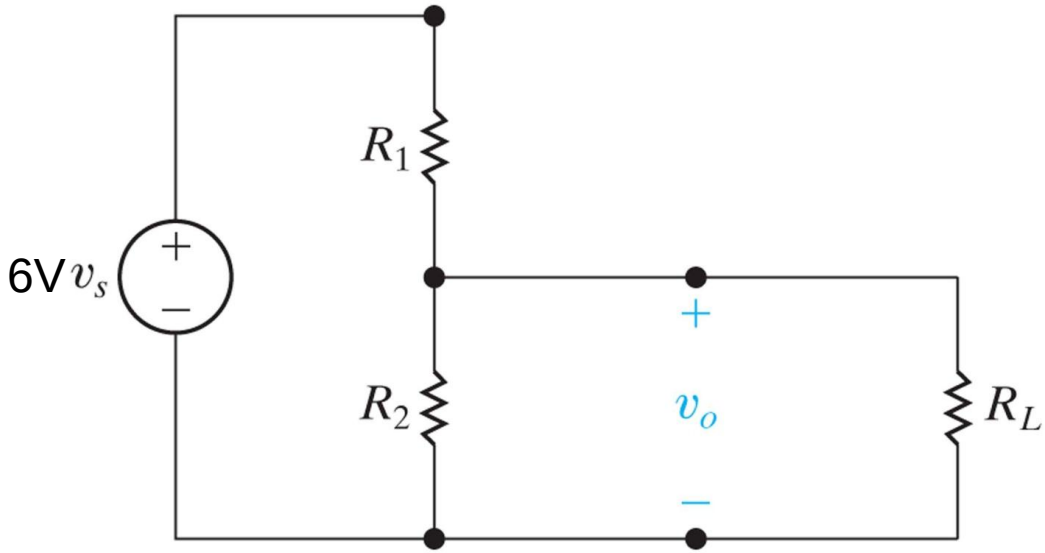

Ch3. V. Voltage and Current Division – Simple Resistor Divider

Find v_0.

$$v_0 = \frac{R_2 \parallel R_L}{R_1 + R_2 \parallel R_L} v_s$$

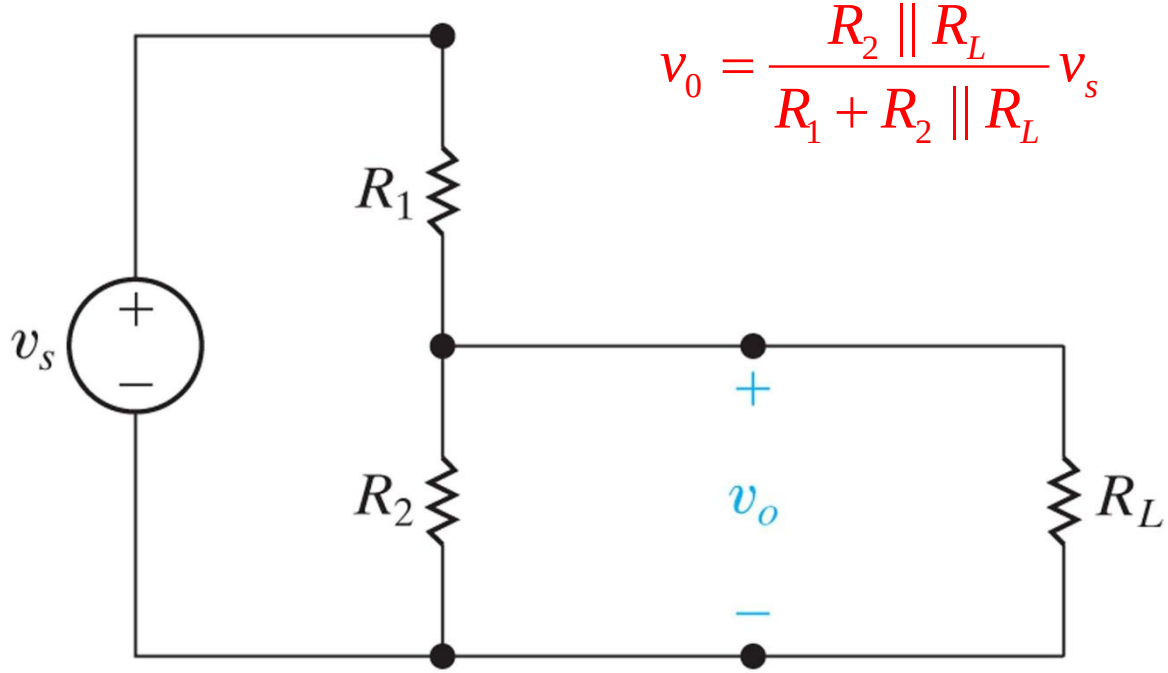

Ch3. V. Voltage and Current Division – Simple Resistor Divider

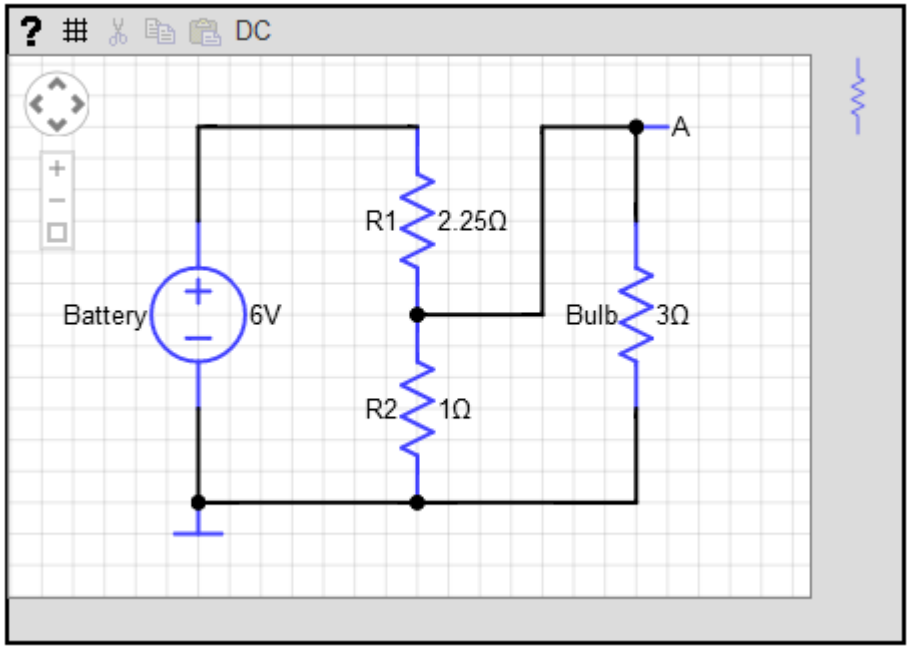

Ch3. V. Voltage and Current Division – Simple Resistor Divider

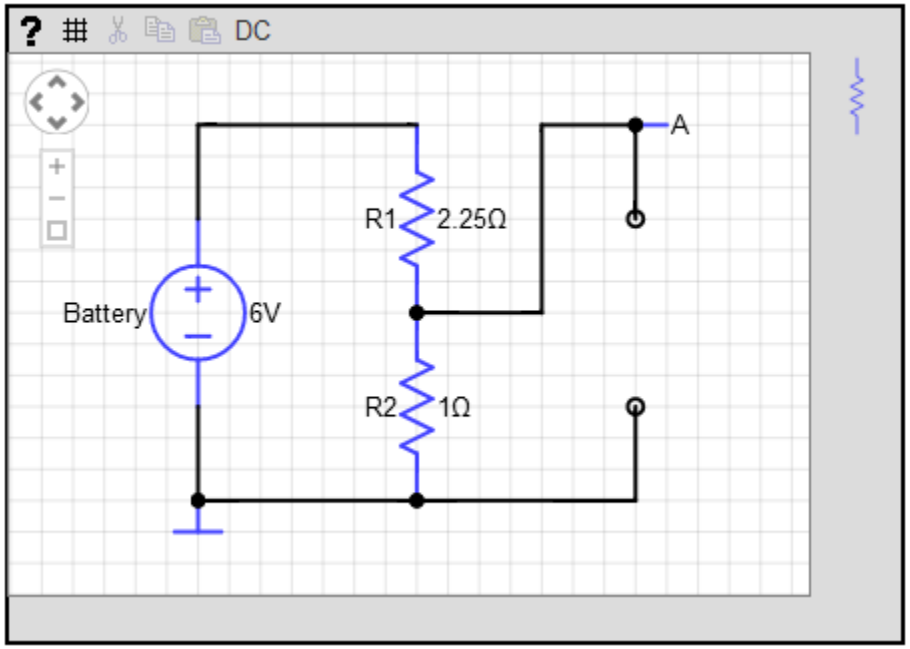

Ch3. V. Voltage and Current Division – R-2R Ladder

Example 2: Find the node voltages.

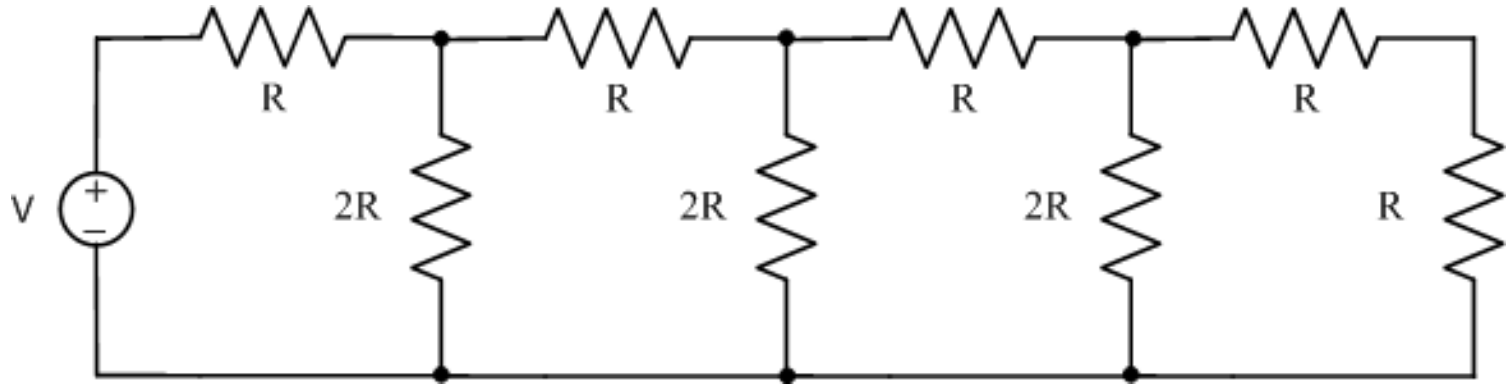

Ch3. VI. Measuring Voltage and Current

An ammeter is used to measure current and a voltmeter is used to measure voltage. Connect the ammeter in series with the circuit and the voltmeter in parallel with the circuit. The ammeter ideally has zero resistance, while the voltmeter ideally has infinite resistance.

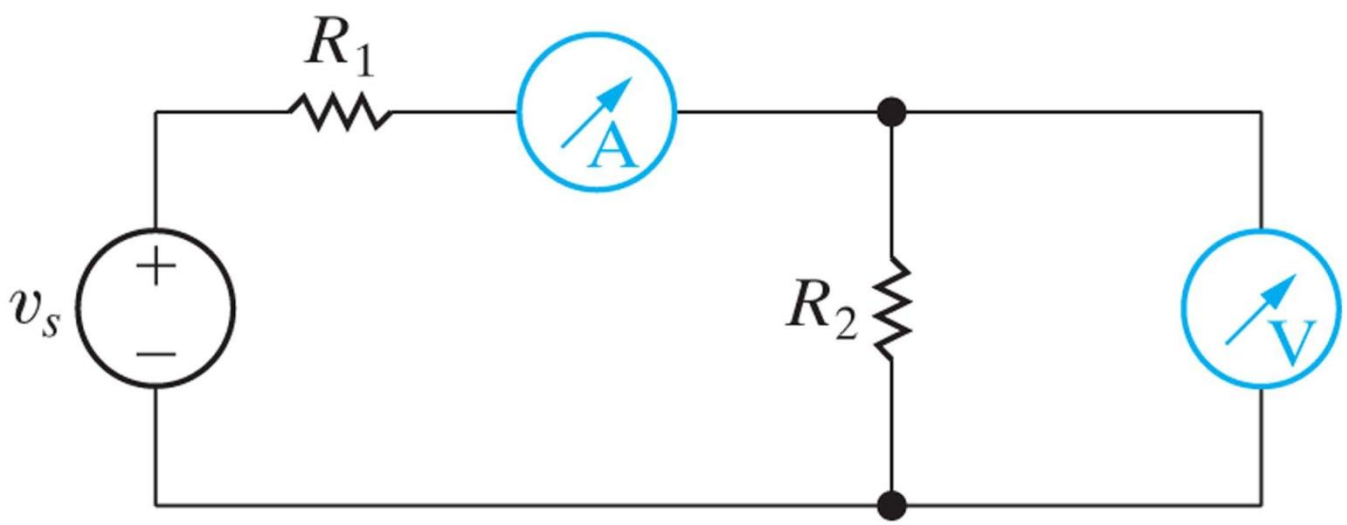

Ch3. VI. Measuring Voltage and Current

In reality, the measurement devices have finite resistance and disturb the circuit being measured.

$$\% \text{ Error } = \frac{\text{Measured Value} - \text{True Value}}{\text{True Value}} \times 100$$

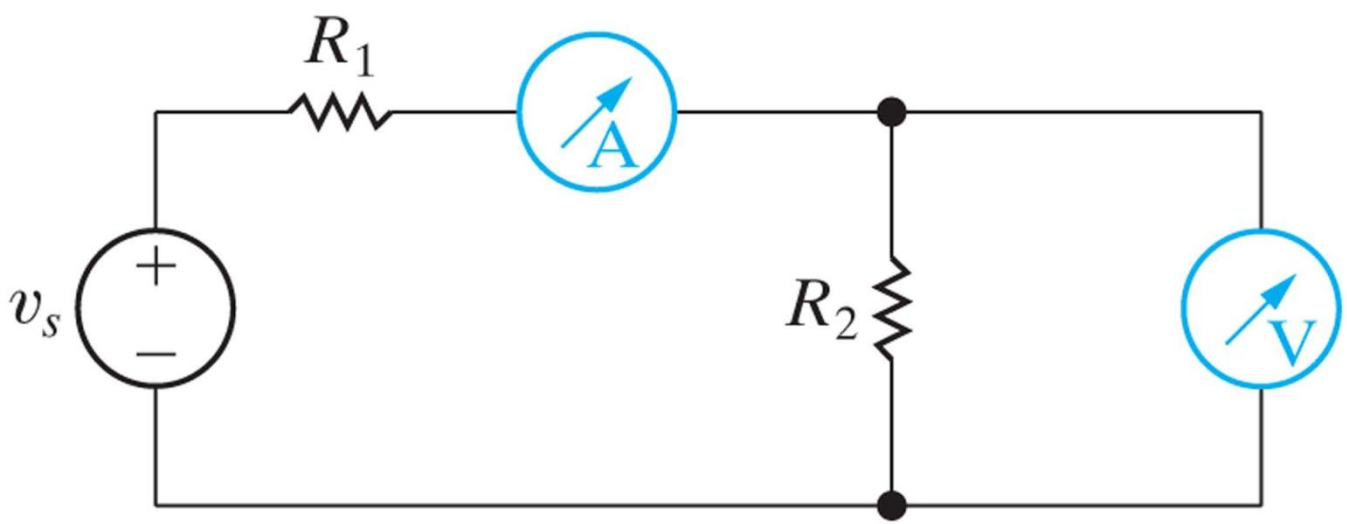

Ch3. VIII. Wheatstone Bridge

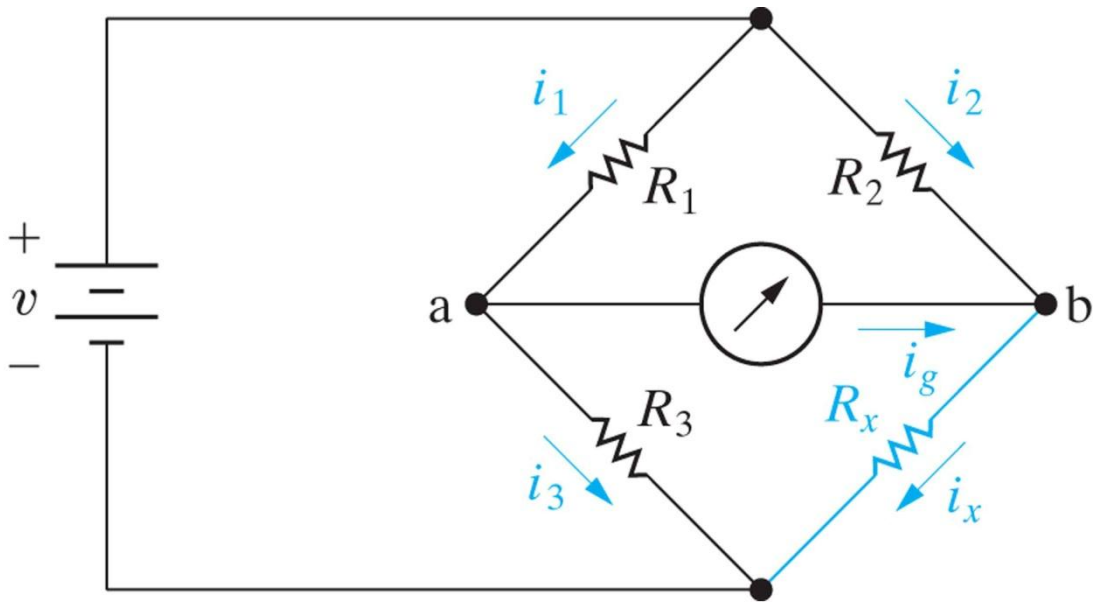

If balanced, $i_g = 0$. This means:

$$i_1 R_1 = i_2 R_2$$

$$i_3 R_3 = i_x R_x \Rightarrow i_3 R_3 = i_2 R_x$$

Dividing the equations:

$$\frac{R_1}{R_3} = \frac{R_2}{R_x} \Rightarrow R_x = R_3 \frac{R_2}{R_1}$$

The Wheatstone Bridge is a very common sensor circuit.

Ch3. VII. Delta-Wye Transformation

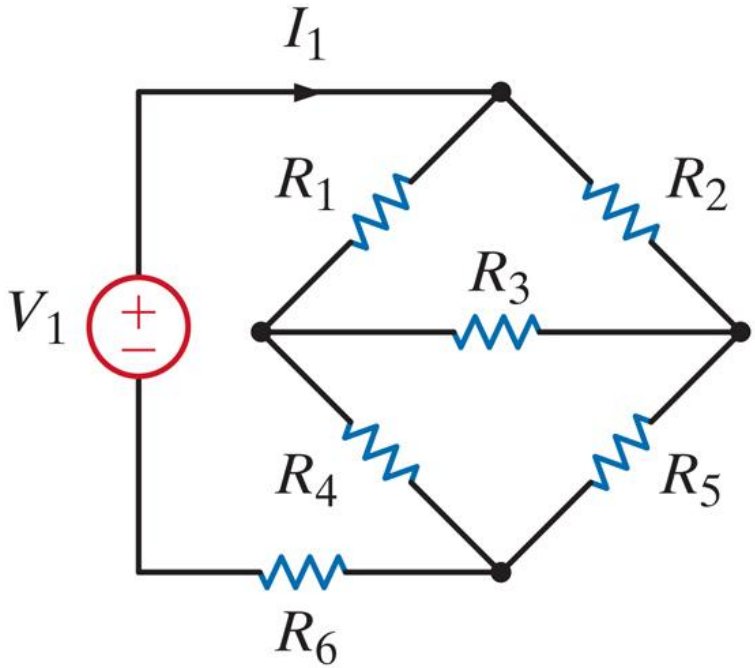

THIS CIRCUIT HAS NO RESISTOR IN SERIES OR PARALLEL !

Ch3. VII. Delta-Wye Transformation

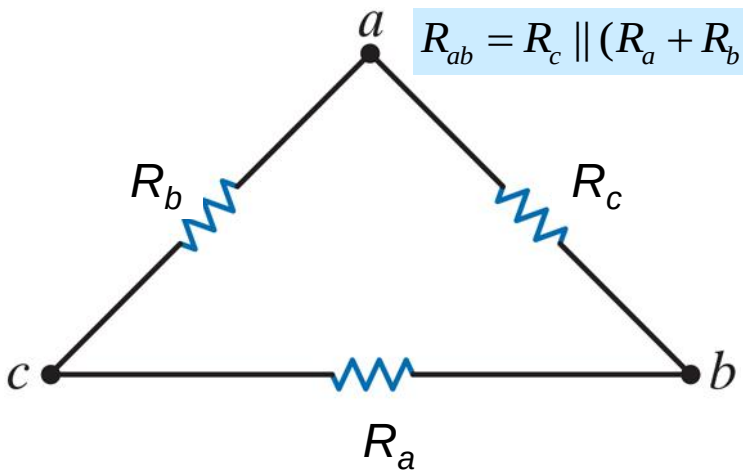

$$R_{ab} = R_c \,||\, (R_a + R_b)$$

$\Delta \rightarrow \boldsymbol{Y}$

$Y \rightarrow \Delta$

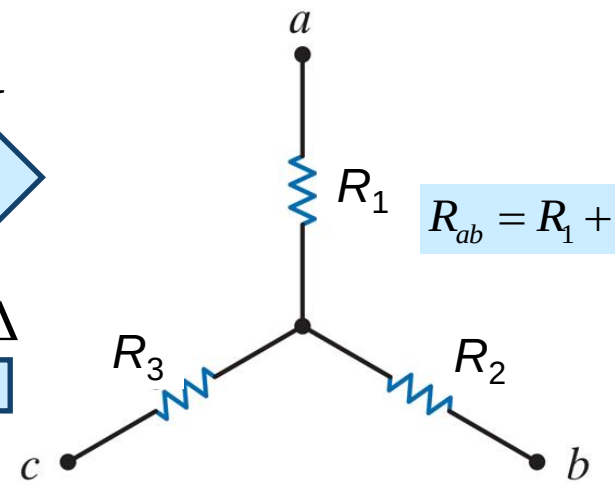

$$R_{ab} = R_1 + R_2$$

$$R_1 + R_2 = \frac{R_c(R_a + R_b)}{R_a + R_b + R_c}$$

$$R_2 + R_3 = \frac{R_a(R_b + R_c)}{R_a + R_b + R_c}$$

$$R_1 + R_3 = \frac{R_b(R_a + R_c)}{R_a + R_b + R_c}$$

SUBTRACT THE FIRST TWO THEN ADD TO THE THIRD TO GET R_1

$$R_1 = \frac{R_b R_c}{R_a + R_b + R_c}$$

$$R_2 = \frac{R_a R_c}{R_a + R_b + R_c}$$

$$R_3 = \frac{R_a R_b}{R_a + R_b + R_c}$$

$$\Delta \rightarrow Y$$

Ch3. VII. Delta-Wye Transformation

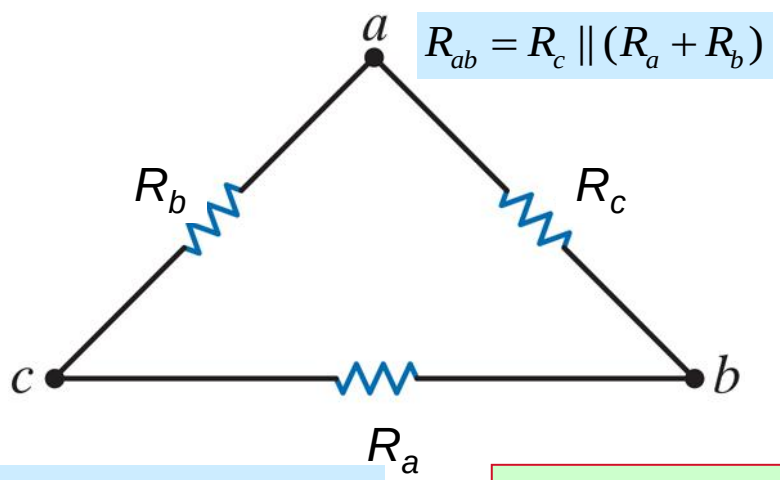

$\Delta \rightarrow \boldsymbol{Y}$

$Y \rightarrow \Delta$

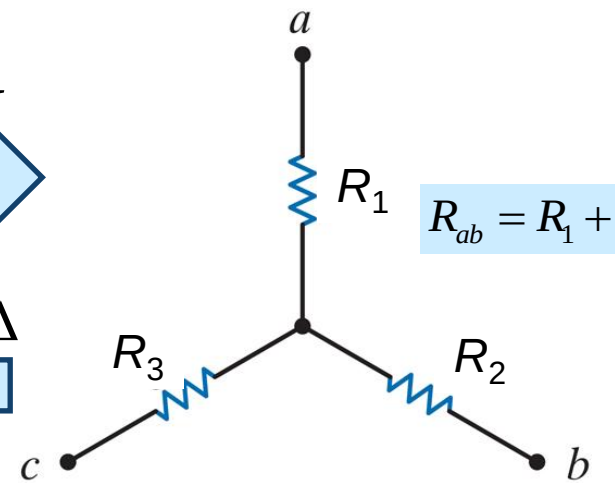

$$R_1 = \frac{R_b R_c}{R_a + R_b + R_c}$$

$$R_2 = \frac{R_a R_c}{R_a + R_b + R_c}$$

$$R_3 = \frac{R_a R_b}{R_a + R_b + R_c}$$

$$\Delta \rightarrow Y$$

$$\frac{R_1}{R_2} = \frac{R_b}{R_a} \Rightarrow R_a = \frac{R_2 R_b}{R_1}$$

$$\frac{R_2}{R_3} = \frac{R_c}{R_b} \Rightarrow R_c = \frac{R_b R_2}{R_3}$$

REPLACE IN THE THIRD AND SOLVE FOR R_b

$$R_a = \frac{R_1 R_2 + R_2 R_3 + R_3 R_1}{R_1}$$

$$R_b = \frac{R_1 R_2 + R_2 R_3 + R_3 R_1}{R_2}$$

$$R_c = \frac{R_1 R_2 + R_2 R_3 + R_3 R_1}{R_3}$$

$$Y \rightarrow \Delta$$

Ch3. VII. Delta-Wye Transformation

D2Y.swf

Ch4. I. Circuit Definitions – Planar Circuit

› Planar Circuit: A planar circuit is a circuit that can be drawn on a plane with no crossing branches. Is the circuit below planar ?

Yes. Move R_7 outside.

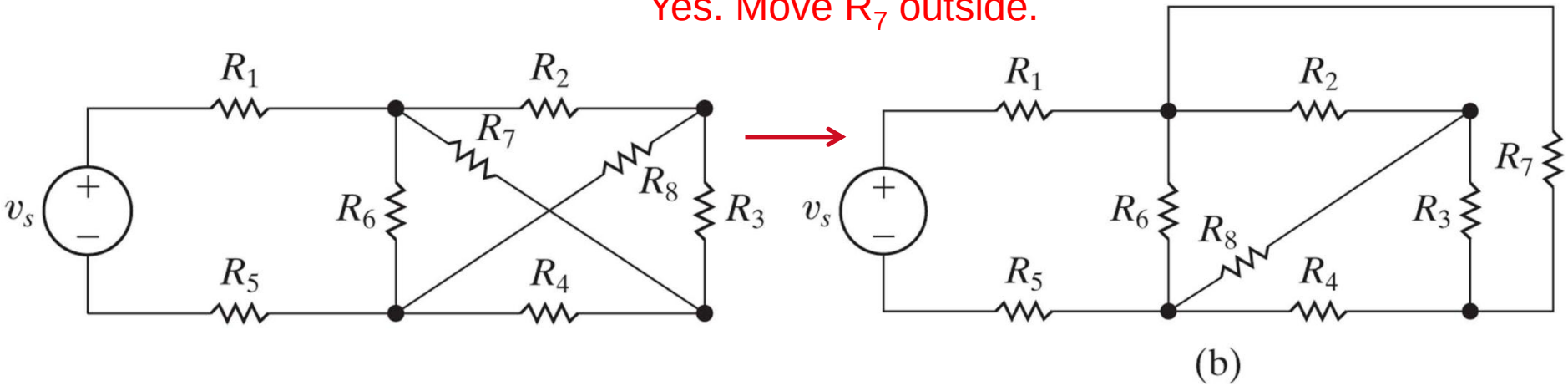

Ch4. I. Circuit Definitions – Planar Circuit

› Planar Circuit: A planar circuit is a circuit that can be drawn on a plane with no crossing branches. Is the circuit below planar ?

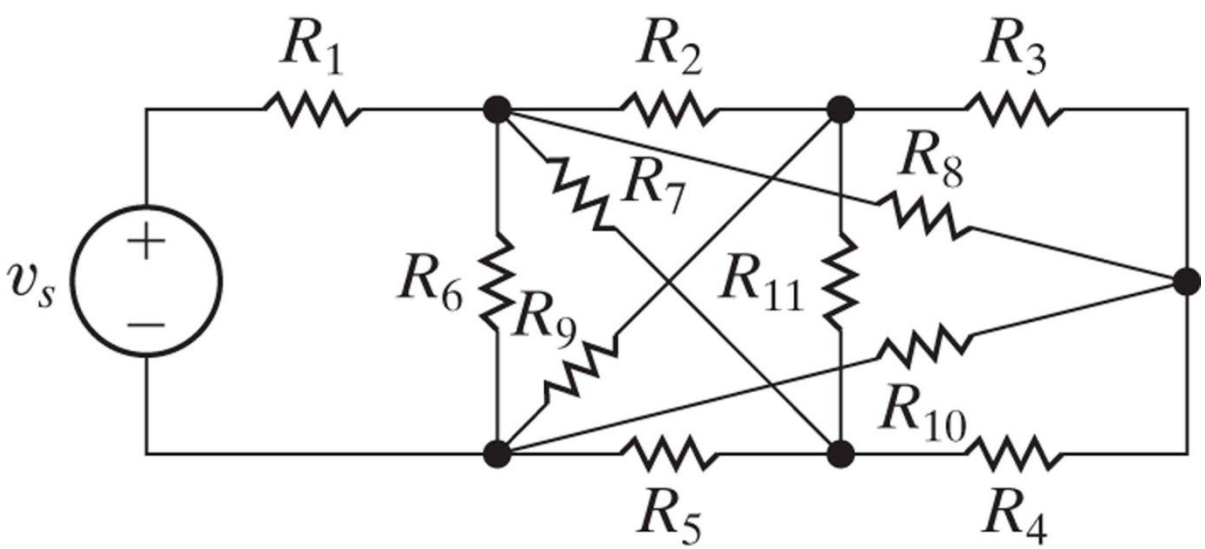

Ch4. I. Circuit Definitions – Planar Circuit

› Planar Circuit: A planar circuit is a circuit that can be drawn on a plane with no crossing branches. Is the circuit below planar ?

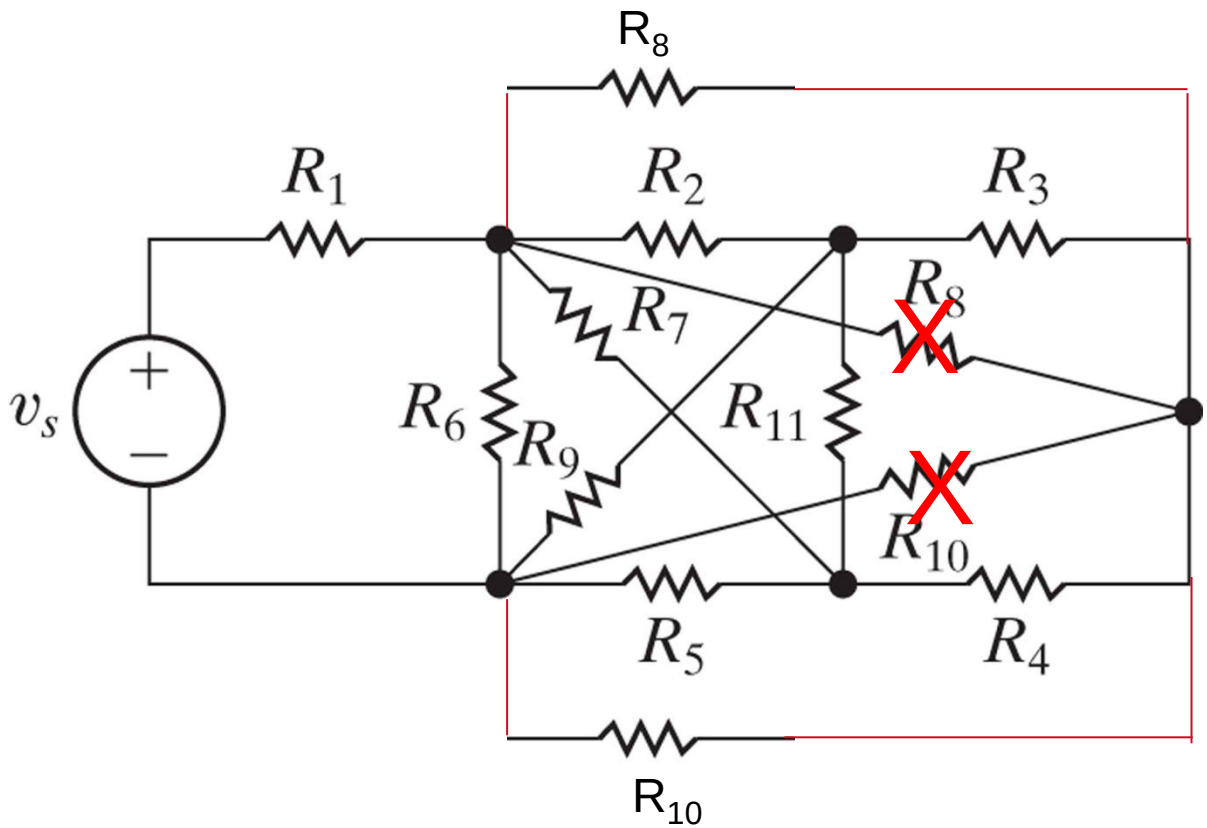

No way to uncross R_7 therefore not planar.

NODES, LOOPS, AND BRANCHES

Ch4. I. Circuit Definitions. Recall: Nodes, Loops, and Branches

- An essential node is a node where three or more circuit elements join.
- An essential branch is a branch path connecting two essential nodes.
- A network with b_E branches, n_E nodes, and L independent loops will satisfy the fundamental theorem of network topology:
  - $b_E = L + n_E - 1$

How many essential branches, essential nodes, loops ?

Node 3 is not an essential node.

2 Essential Nodes
3 Loops
4 Essential Branches
4 = 3 + 2 - 1

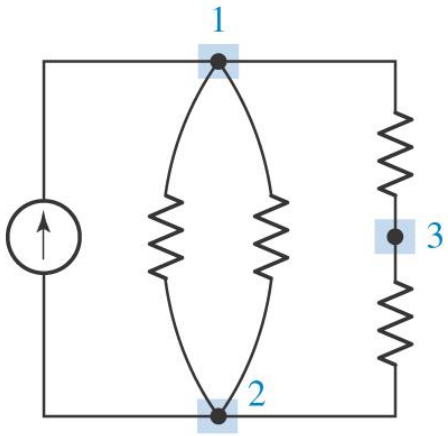

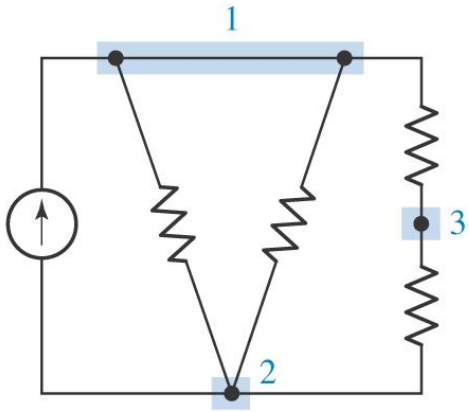

Ch4. II. Circuit Analysis Techniques – Nodal Analysis and Mesh Analysis

- There are two primary systematic techniques for circuit analysis: (1) Node-Voltage Analysis and (2) Mesh-Current Analysis.
- Nodal analysis can solve both planar and non-planar circuits. Mesh analysis (in its standard form) can only solve planar circuits.

How many equations are required to fully determine or specify a circuit ?

Topology tells us that: $b_E = n_E + L - 1$. We need one equation for each independent loop. In other words, we require $L = b_E - n_E + 1$ independent equations.

NODAL ANALYSIS

Ch4. II. Circuit Analysis Techniques – Nodal Analysis

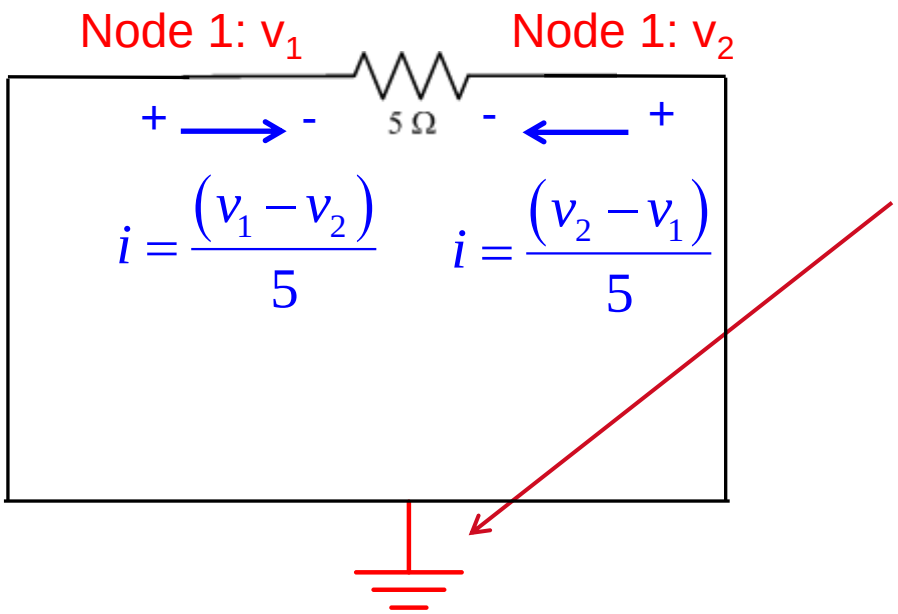

What is Ohm's law here ?

It is common to specify a reference ground voltage.

The voltage difference depends on the direction of the current because of the passive sign convention.

Ch4. II. Circuit Analysis Techniques – Nodal Analysis

This circuit cannot be solved using voltage and current division principles.

1. Begin by selecting a reference node (usually – terminal of a voltage source) and mark it by the ground symbol.

2. Label other node voltages.

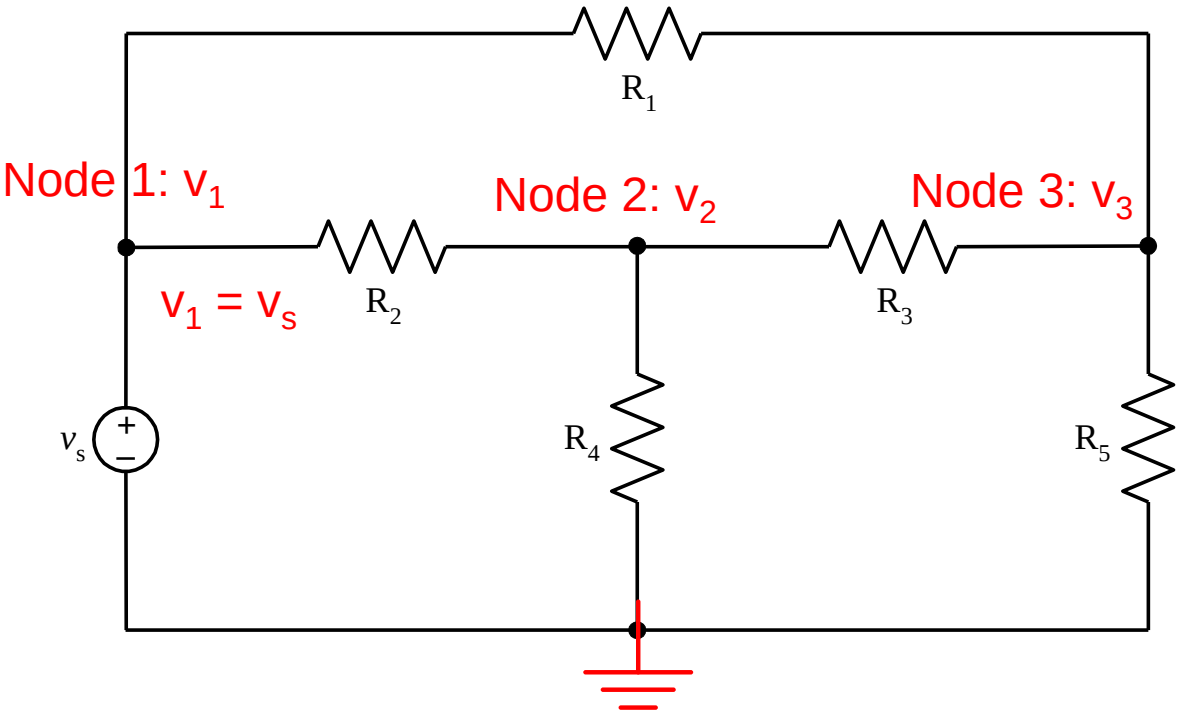

3. Determine nodes at known voltage.

Node 1: $v_1 = v_s$

(i.e. v_1 is already known)

Ch4. II. Circuit Analysis Techniques – Nodal Analysis

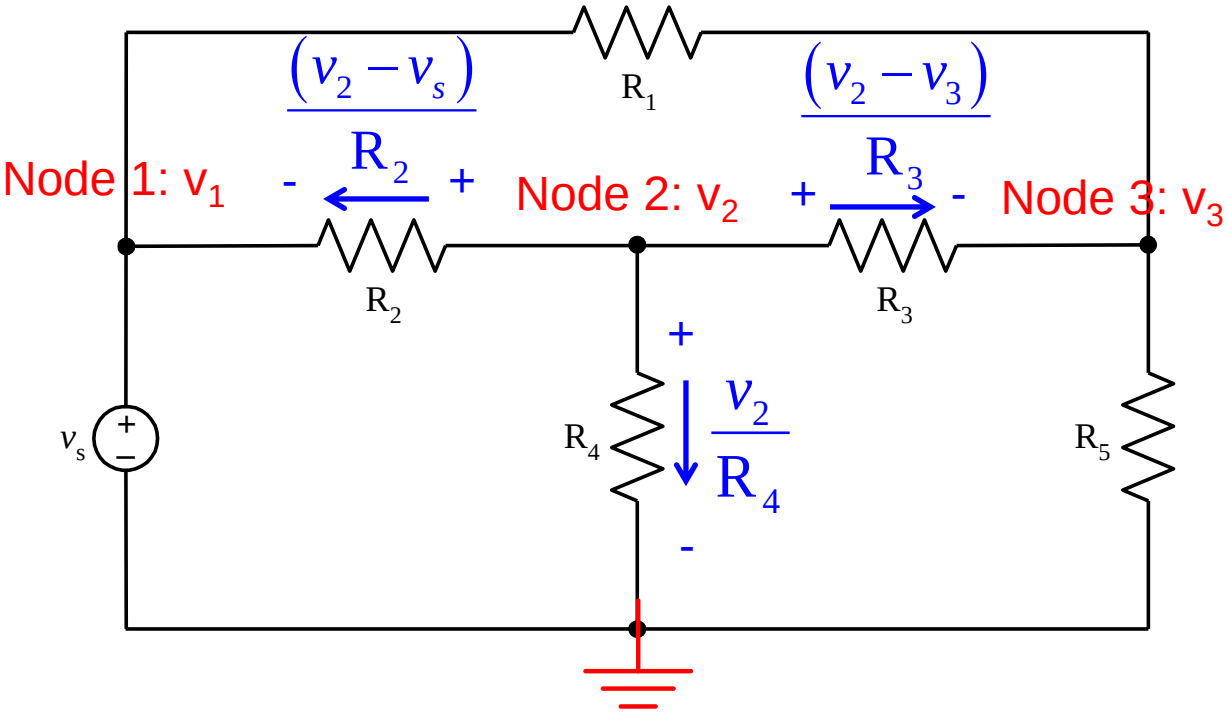

4. Use KCL at nodes to get nodal equations.

KCL at node 2:

$$\frac{v_2 - v_s}{R_2} + \frac{v_2 - v_3}{R_3} + \frac{v_2}{R_4} = 0$$

NODAL ANALYSIS

Ch4. II. Circuit Analysis Techniques – Nodal Analysis

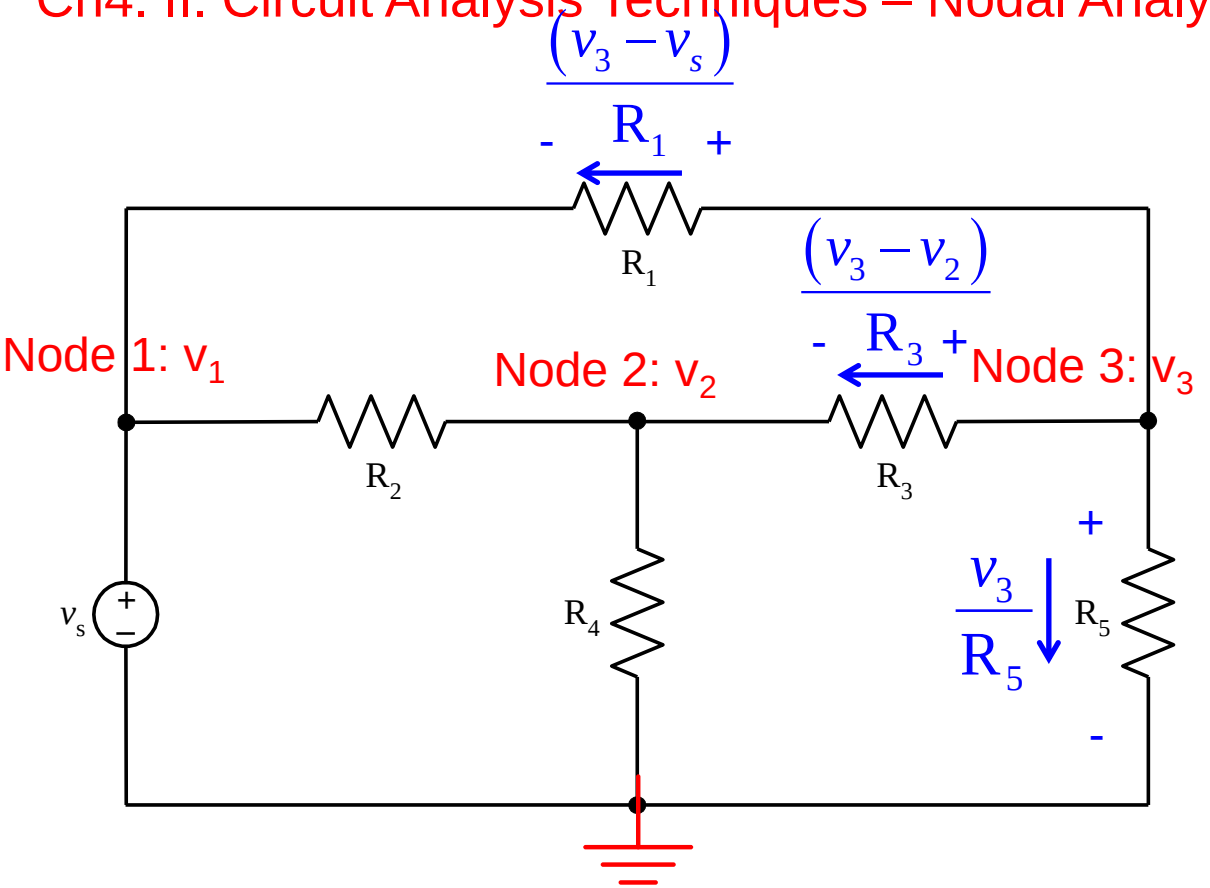

4. Use KCL at nodes to get nodal equations.

KCL at node 3:

$$\frac{v_3 - v_2}{R_3} + \frac{v_3 - v_s}{R_1} + \frac{v_3}{R_5} = 0$$

Ch4. II. Circuit Analysis Techniques – Nodal Analysis

Suppose numerical values are given for the source and resistors.

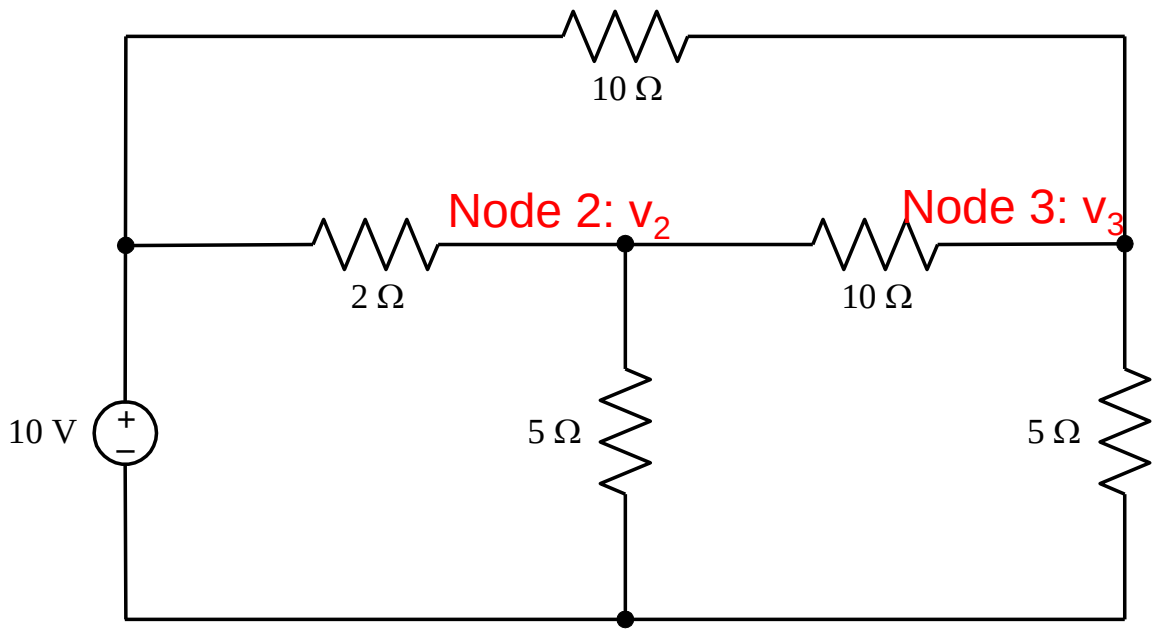

KCL at node 2:

$$\frac{v_2 - 10}{2} + \frac{v_2 - v_3}{10} + \frac{v_2}{5} = 0$$

KCL at node 3:

$$\frac{v_3 - v_2}{10} + \frac{v_3 - 10}{10} + \frac{v_3}{5} = 0$$

Ch4. II. Circuit Analysis Techniques – Nodal Analysis

Suppose numerical values are given for the source and resistors.

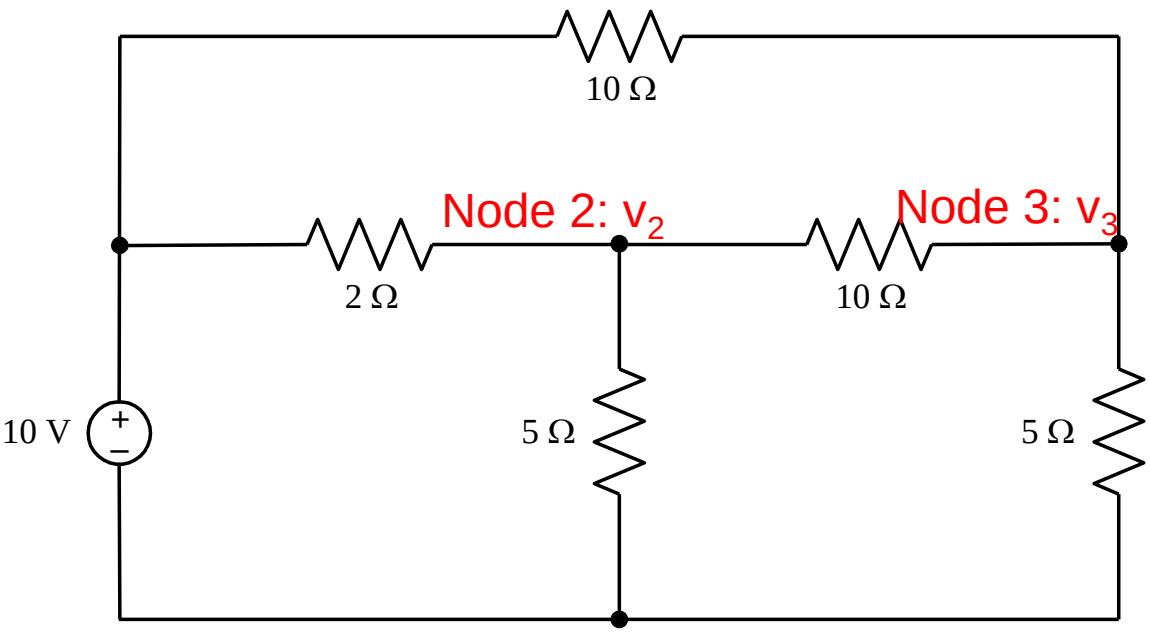

Solve the equations.

KCL at node 2:

$$\frac{v_2 - 10}{2} + \frac{v_2 - v_3}{10} + \frac{v_2}{5} = 0$$

KCL at node 3:

$$\frac{v_3 - v_2}{10} + \frac{v_3 - 10}{10} + \frac{v_3}{5} = 0$$

$$5v_2 - 50 + v_2 - v_3 + 2v_2 = 0$$

$$v_3 - v_2 + v_3 - 10 + 2v_3 = 0$$

$$\rightarrow$$

$$8v_2 - v_3 = 50$$

$$-v_2 + 4v_3 = 10$$

SOLVING SYSTEMS OF LINEAR EQUATIONS

Ch4. III. Solving Systems of Linear Equations (hopefully review ?)

Today, solving systems of linear equations (whether small or gigantically large) is performed using computers. Nonetheless, we still require you to *understand* how to do this manually.

Ad hoc substitution methods for solving linear equations are prone to human errors. Therefore, engineers avoid this method.

There is a matrix notation for a system of linear equations, referred to as an augmented matrix. You organise the variables in the same order for each equation. In this case, v_2 first and then v_3.

$$\begin{aligned} 8v_2 - v_3 &= 50 \\ -v_2 + 4v_3 &= 10 \end{aligned} \longrightarrow \begin{bmatrix} 8 & -1 \\ -1 & 4 \end{bmatrix} \begin{bmatrix} v_2 \\ v_3 \end{bmatrix} = \begin{bmatrix} 50 \\ 10 \end{bmatrix} \longrightarrow \left[\begin{array}{cc:c} 8 & -1 & 50 \\ -1 & 4 & 10 \end{array}\right]$$

Matrix-vector Notation

Augmented Matrix

SOLVING SYSTEMS OF LINEAR EQUATIONS

Ch4. III. Solving Systems of Linear Equations (hopefully review ?)

In order to solve the system of equations, the objective is to make the augmented matrix upper triangular (that is, zero everywhere below the diagonal. Then, use back substitution to solve. Elementary row operations are used to manipulate the matrix.

If this is not review, you will be taught in maths. For now, use Octave to solve.

$$\begin{aligned} 8v_2 - v_3 &= 50 \\ -v_2 + 4v_3 &= 10 \end{aligned} \longrightarrow \left[\begin{array}{cc|c} 8 & -1 & 50 \\ -1 & 4 & 10 \end{array}\right] \longrightarrow \left[\begin{array}{cc|c} 8 & -1 & 50 \\ -8 & 32 & 80 \end{array}\right] \longrightarrow \left[\begin{array}{cc|c} 8 & -1 & 50 \\ 0 & 31 & 130 \end{array}\right]$$

$$\longrightarrow \left[\begin{array}{cc|c} 8 & -1 & 50 \\ 0 & 1 & \frac{130}{31} \end{array}\right] \longrightarrow \left[\begin{array}{cc|c} 8 & 0 & \frac{1680}{31} \\ 0 & 1 & \frac{130}{31} \end{array}\right] \longrightarrow \left[\begin{array}{cc|c} 1 & 0 & \frac{210}{31} \\ 0 & 1 & \frac{130}{31} \end{array}\right] \longrightarrow \begin{aligned} v_2 &= \frac{210}{31} \\ v_3 &= \frac{130}{31} \end{aligned}$$

Ch4. III. Solving Systems of Linear Equations (hopefully review ?)

We will repeat this method for a system of three equations.

$$\begin{aligned} v_3 + 2v_2 &= 4 \\ v_1 + v_2 + 2v_3 &= 6 \\ v_2 + 2v_1 + v_3 &= 7 \end{aligned} \longrightarrow \begin{aligned} 0v_1 + 2v_2 + v_3 &= 4 \\ v_1 + v_2 + 2v_3 &= 6 \\ 2v_1 + v_2 + v_3 &= 7 \end{aligned} \longrightarrow \left[\begin{array}{ccc|c} 0 & 2 & 1 & 4 \\ 1 & 1 & 2 & 6 \\ 2 & 1 & 1 & 7 \end{array}\right] \longrightarrow \left[\begin{array}{ccc|c} 1 & 1 & 2 & 6 \\ 0 & 2 & 1 & 4 \\ 2 & 1 & 1 & 7 \end{array}\right]$$

$$\longrightarrow \left[\begin{array}{ccc|c} 2 & 2 & 4 & 12 \\ 0 & 2 & 1 & 4 \\ 2 & 1 & 1 & 7 \end{array}\right] \longrightarrow \left[\begin{array}{ccc|c} 2 & 2 & 4 & 12 \\ 0 & 2 & 1 & 4 \\ 0 & -1 & -3 & -5 \end{array}\right] \longrightarrow \left[\begin{array}{ccc|c} 2 & 2 & 4 & 12 \\ 0 & 2 & 1 & 4 \\ 0 & -2 & -6 & -10 \end{array}\right]$$

$$\longrightarrow \left[\begin{array}{ccc|c} 2 & 2 & 4 & 12 \\ 0 & 2 & 1 & 4 \\ 0 & 0 & -5 & -6 \end{array}\right] \longrightarrow \left[\begin{array}{ccc|c} 2 & 2 & 4 & 12 \\ 0 & 2 & 1 & 4 \\ 0 & 0 & 1 & \frac{6}{5} \end{array}\right] \longrightarrow \left[\begin{array}{ccc|c} 2 & 2 & 4 & 12 \\ 0 & 2 & 0 & \frac{14}{5} \\ 0 & 0 & 1 & \frac{6}{5} \end{array}\right]$$

Ch4. III. Solving Systems of Linear Equations (hopefully review ?)

We will repeat this method for a system of three equations.

$$\rightarrow \left[\begin{array}{ccc|c} 2 & 2 & 4 & 12 \\ 0 & 2 & 0 & \frac{14}{5} \\ 0 & 0 & 1 & \frac{6}{5} \end{array}\right] \rightarrow \left[\begin{array}{ccc|c} 2 & 2 & 4 & 12 \\ 0 & 1 & 0 & \frac{7}{5} \\ 0 & 0 & 1 & \frac{6}{5} \end{array}\right] \rightarrow \left[\begin{array}{ccc|c} 2 & 2 & 0 & \frac{36}{5} \\ 0 & 1 & 0 & \frac{7}{5} \\ 0 & 0 & 1 & \frac{6}{5} \end{array}\right] \rightarrow \left[\begin{array}{ccc|c} 2 & 0 & 0 & \frac{22}{5} \\ 0 & 1 & 0 & \frac{7}{5} \\ 0 & 0 & 1 & \frac{6}{5} \end{array}\right]$$

$$\rightarrow \left[\begin{array}{ccc|c} 1 & 0 & 0 & \frac{11}{5} \\ 0 & 1 & 0 & \frac{7}{5} \\ 0 & 0 & 1 & \frac{6}{5} \end{array}\right] \rightarrow \begin{array}{l} v_1 = \frac{11}{5} \\ v_2 = \frac{7}{5} \\ v_3 = \frac{6}{5} \end{array}$$

SOLVING SYSTEMS OF LINEAR EQUATIONS

Ch4. III. Solving Systems of Linear Equations (Using Octave/Matlab)

$$
\begin{aligned}
0v_1 + 2v_2 + v_3 &= 4 \\
v_1 + v_2 + 2v_3 &= 6 \\
2v_1 + v_2 + v_3 &= 7
\end{aligned}
\longrightarrow
\begin{array}{c}
\begin{array}{cc} \text{A} & \text{\textbackslash b} \end{array} \\
\left[\begin{array}{ccc:c} 0 & 2 & 1 & 4 \\ 1 & 1 & 2 & 6 \\ 2 & 1 & 1 & 7 \end{array}\right]
\end{array}
$$

```
>> A = [0 2 1;1 1 2;2 1 1]

A =

     0     2     1
     1     1     2
     2     1     1

>> b = [4;6;7]

b =

     4
     6
     7

>> A\b

ans =

   11/5
    7/5
    6/5
```

(format rat)

Ch4. II. Circuit Analysis Techniques – Nodal Analysis

Example 2.

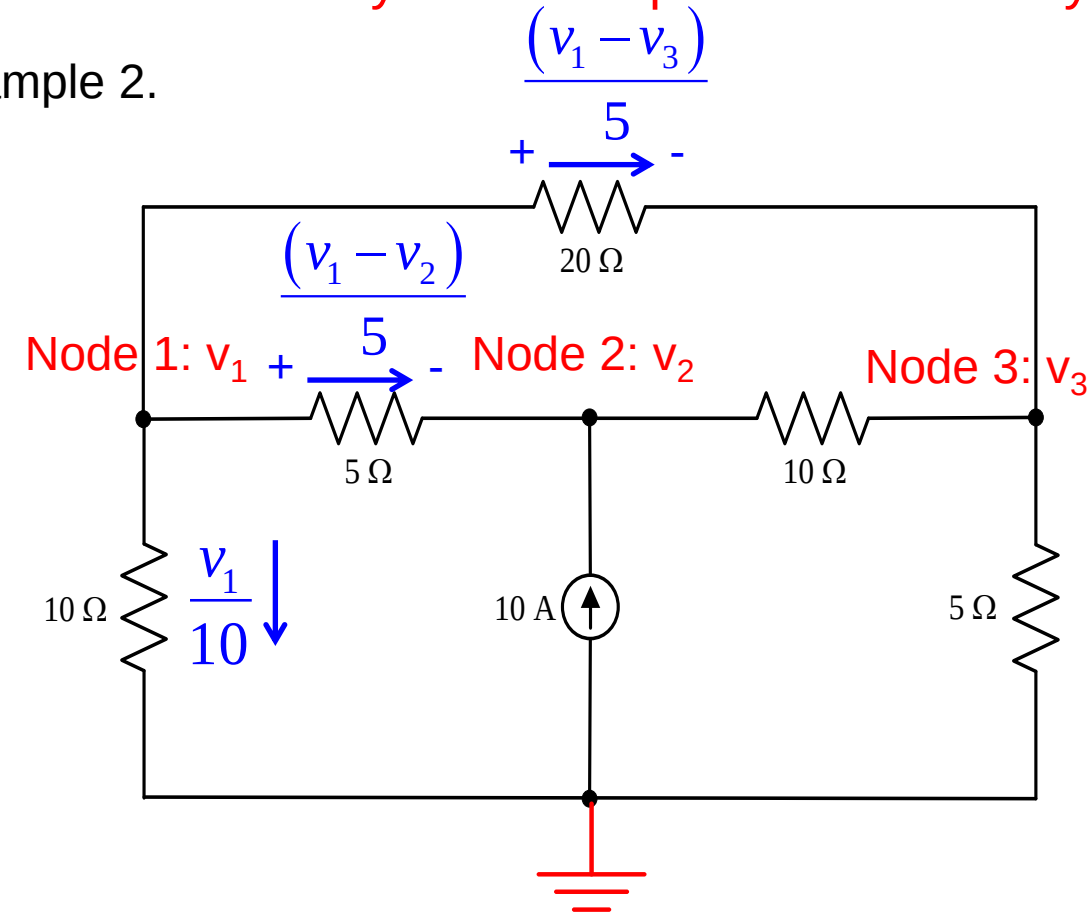

1. Select reference node
2. Identify all other nodes
3. Identify nodes at known voltage (none)
4. Use KCL at nodes to get Node equations.

KCL at node 1:

$$\frac{v_1}{10} + \frac{v_1 - v_2}{5} + \frac{v_1 - v_3}{20} = 0$$

Ch4. II. Circuit Analysis Techniques – Nodal Analysis

Example 2.

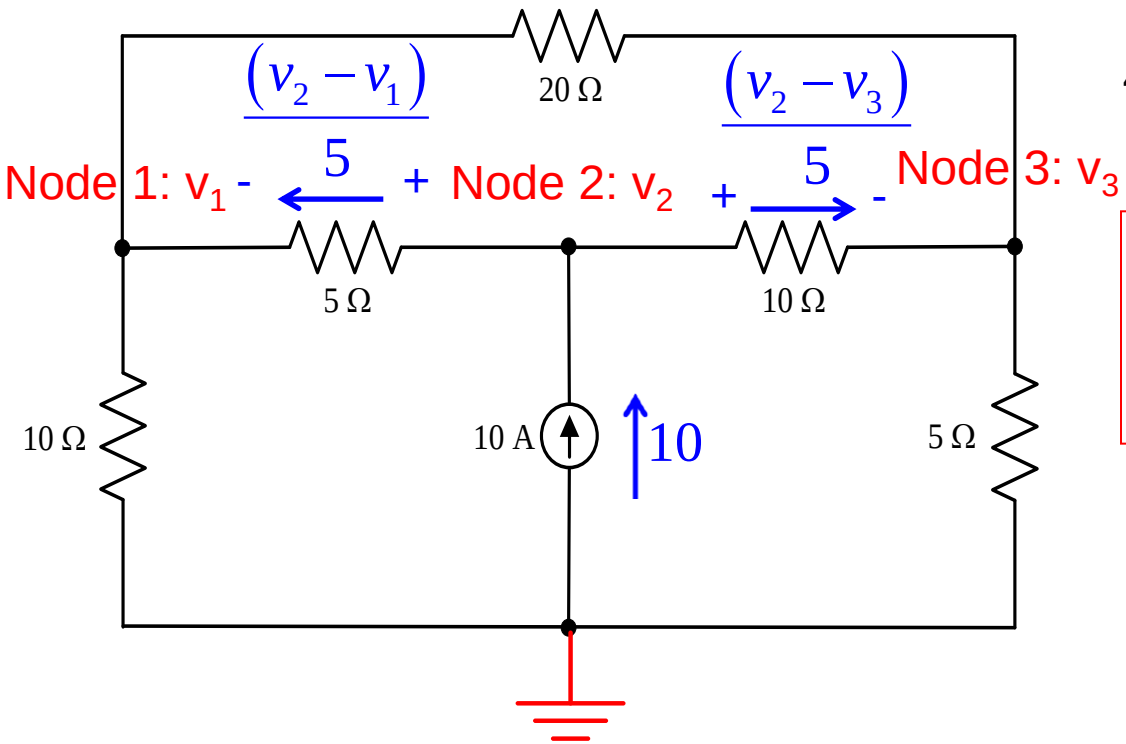

4. Use KCL at nodes to get Node equations.

KCL at node 2:

$$\frac{v_2 - v_1}{5} + \frac{v_2 - v_3}{10} - 10 = 0$$

Ch4. II. Circuit Analysis Techniques – Nodal Analysis

Example 2.

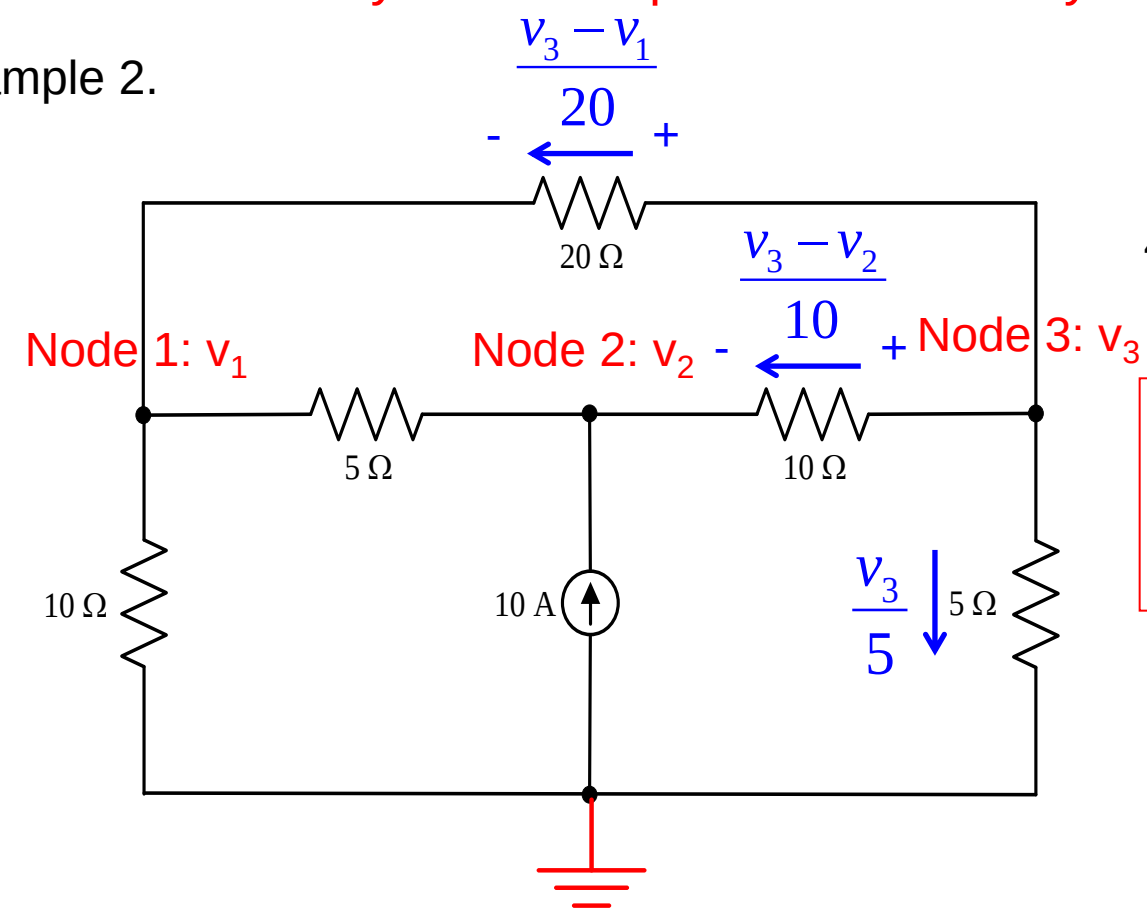

4. Use KCL at nodes to get Node equations.

KCL at node 3:

$$\frac{v_3 - v_1}{20} + \frac{v_3 - v_2}{10} + \frac{v_3}{5} = 0$$

Ch4. II. Circuit Analysis Techniques – Nodal Analysis

Example 2.

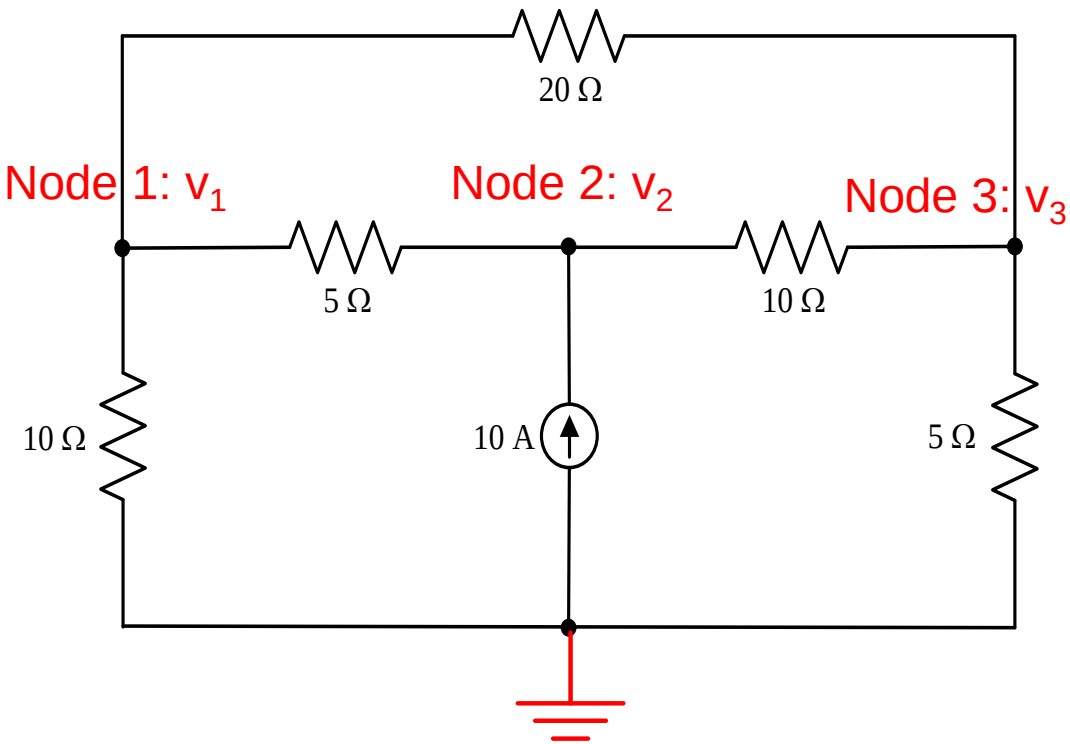

KCL at node 1:

$$\frac{v_1}{10}+\frac{v_1-v_2}{5}+\frac{v_1-v_3}{20}=0$$

KCL at node 2:

$$\frac{v_2-v_1}{5}+\frac{v_2-v_3}{10}-10=0$$

KCL at node 3:

$$\frac{v_3-v_1}{20}+\frac{v_3-v_2}{10}+\frac{v_3}{5}=0$$

Ch4. II. Circuit Analysis Techniques – Nodal Analysis

KCL at node 1:

$$\frac{v_1}{10}+\frac{v_1-v_2}{5}+\frac{v_1-v_3}{20}=0$$

KCL at node 2:

$$\frac{v_2-v_1}{5}+\frac{v_2-v_3}{10}-10=0$$

KCL at node 3:

$$\frac{v_3-v_1}{20}+\frac{v_3-v_2}{10}+\frac{v_3}{5}=0$$

$$\longrightarrow$$

$$\frac{v_1}{10}+\frac{v_1-v_2}{5}+\frac{v_1-v_3}{20}=0$$

$$\frac{v_2-v_1}{5}+\frac{v_2-v_3}{10}-10=0$$

$$\frac{v_3-v_1}{20}+\frac{v_3-v_2}{10}+\frac{v_3}{5}=0$$

$$\longrightarrow$$

$$2v_1+4v_1-4v_2+v_1-v_3=0$$

$$2v_2-2v_1+v_2-v_3=100$$

$$v_3-v_1+2v_3-2v_2+4v_3=0$$

Ch4. II. Circuit Analysis Techniques – Nodal Analysis

$$\begin{aligned} 2v_1 + 4v_1 - 4v_2 + v_1 - v_3 &= 0 \\ 2v_2 - 2v_1 + v_2 - v_3 &= 100 \\ v_3 - v_1 + 2v_3 - 2v_2 + 4v_3 &= 0 \end{aligned} \longrightarrow \begin{aligned} 7v_1 - 4v_2 - v_3 &= 0 \\ -2v_1 + 3v_2 - v_3 &= 100 \\ -v_1 - 2v_2 + 7v_3 &= 0 \end{aligned} \longrightarrow \left[\begin{array}{ccc|c} 7 & -4 & -1 & 0 \\ -2 & 3 & -1 & 100 \\ -1 & -2 & 7 & 0 \end{array}\right]$$

$$\longrightarrow \left[\begin{array}{ccc|c} 7 & -4 & -1 & 0 \\ -2 & 3 & -1 & 100 \\ -1 & -2 & 7 & 0 \end{array}\right] \longrightarrow \left[\begin{array}{ccc|c} 14 & -8 & -2 & 0 \\ -14 & 21 & -7 & 700 \\ -14 & -28 & 98 & 0 \end{array}\right] \longrightarrow \left[\begin{array}{ccc|c} 14 & -8 & -2 & 0 \\ 0 & 13 & -9 & 700 \\ 0 & -36 & 96 & 0 \end{array}\right]$$

$$\longrightarrow \left[\begin{array}{ccc|c} 7 & -4 & -1 & 0 \\ 0 & 156 & -108 & 8400 \\ 0 & -468 & 1248 & 0 \end{array}\right] \longrightarrow \left[\begin{array}{ccc|c} 7 & -4 & -1 & 0 \\ 0 & 13 & -9 & 700 \\ 0 & 0 & 924 & 25200 \end{array}\right] \rightarrow \left[\begin{array}{ccc|c} 7 & -4 & -1 & 0 \\ 0 & 13 & -9 & 700 \\ 0 & 0 & 1 & 300/11 \end{array}\right]$$

Ch4. II. Circuit Analysis Techniques – Nodal Analysis

$$\rightarrow \left[\begin{array}{ccc|c} 7 & -4 & -1 & 0 \\ 0 & 13 & -9 & 700 \\ 0 & 0 & 1 & 300/11 \end{array}\right] \rightarrow \left[\begin{array}{ccc|c} 7 & -4 & -1 & 0 \\ 0 & 13 & 0 & 700 \\ 0 & 0 & 1 & 300/11 \end{array}\right] \rightarrow \left[\begin{array}{ccc|c} 7 & -4 & -1 & 0 \\ 0 & 13 & 0 & 10400/11 \\ 0 & 0 & 1 & 300/11 \end{array}\right]$$

$$\rightarrow \left[\begin{array}{ccc|c} 7 & -4 & -1 & 0 \\ 0 & 1 & 0 & 800/11 \\ 0 & 0 & 1 & 300/11 \end{array}\right] \rightarrow \left[\begin{array}{ccc|c} 7 & 0 & 0 & 3500/11 \\ 0 & 1 & 0 & 800/11 \\ 0 & 0 & 1 & 300/11 \end{array}\right] \rightarrow \left[\begin{array}{ccc|c} 1 & 0 & 0 & 500/11 \\ 0 & 1 & 0 & 800/11 \\ 0 & 0 & 1 & 300/11 \end{array}\right]$$

$$v_1 = \frac{500}{11}$$

$$\rightarrow v_2 = \frac{800}{11}$$

$$v_3 = \frac{300}{11}$$

Ch4. II. Circuit Analysis Techniques – Nodal Analysis

Example 2.

Calculate the currents.

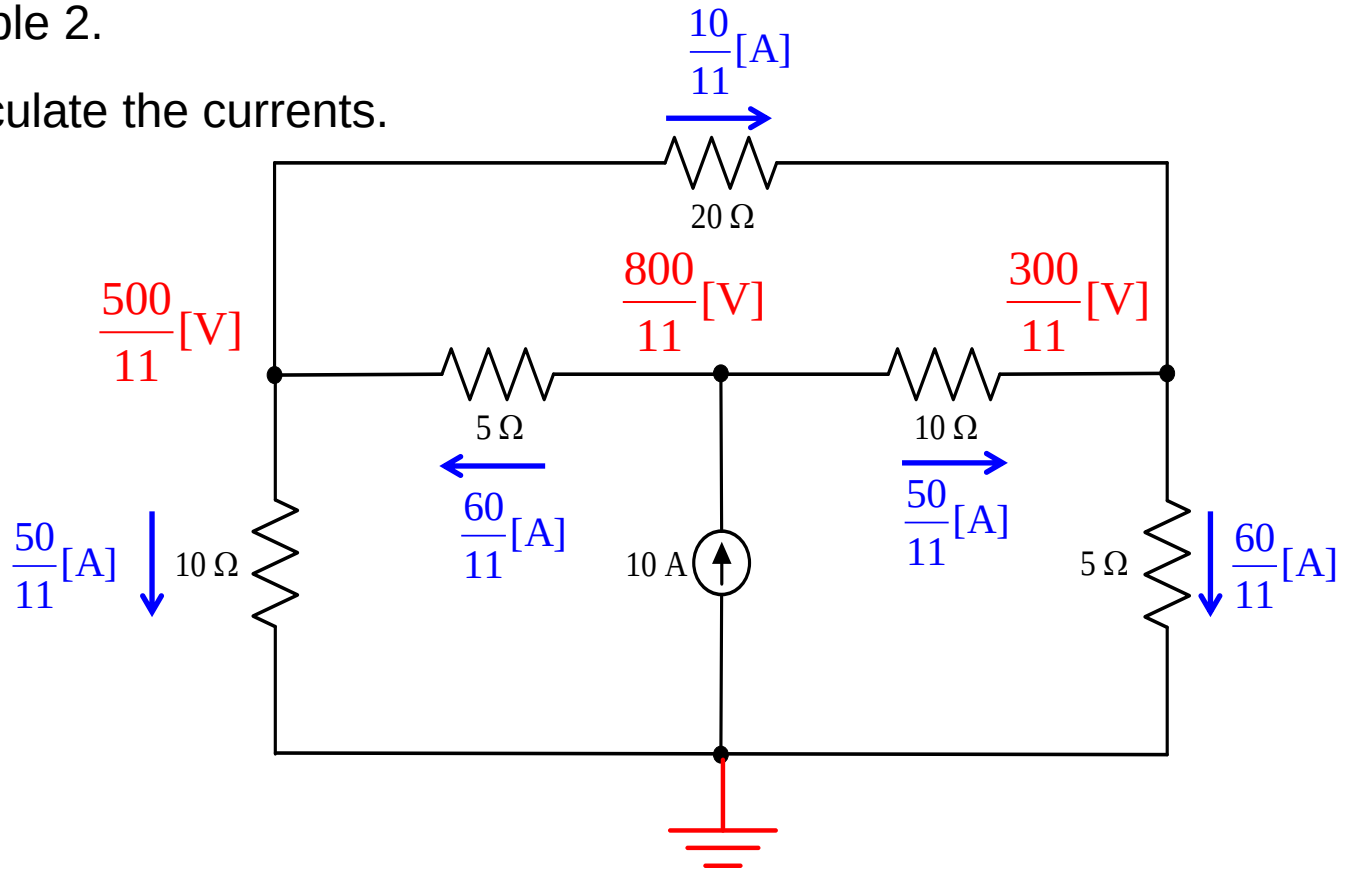

Ch4. II. Circuit Analysis Techniques – Nodal Analysis

Example 3.

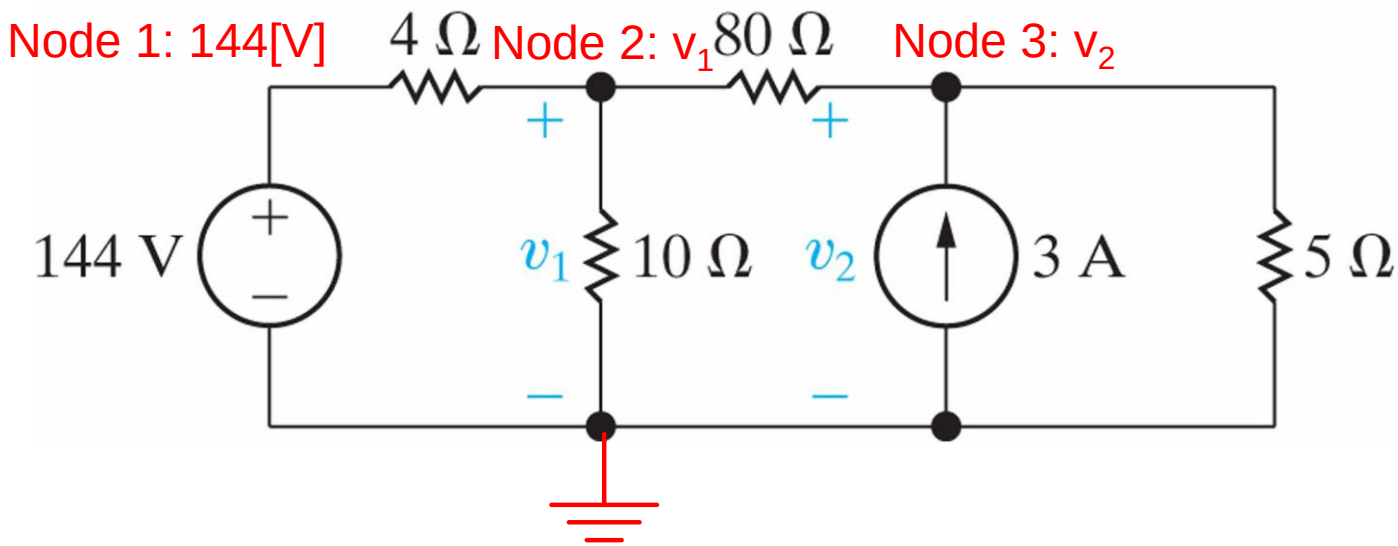

Node 2: $\frac{v_1 - 144}{4} + \frac{v_1}{10} + \frac{v_1 - v_2}{80} = 0$ Node 3: $\frac{v_2 - v_1}{80} + \frac{v_2}{5} - 3 = 0$

Ch4. II. Circuit Analysis Techniques – Nodal Analysis

Example 3.

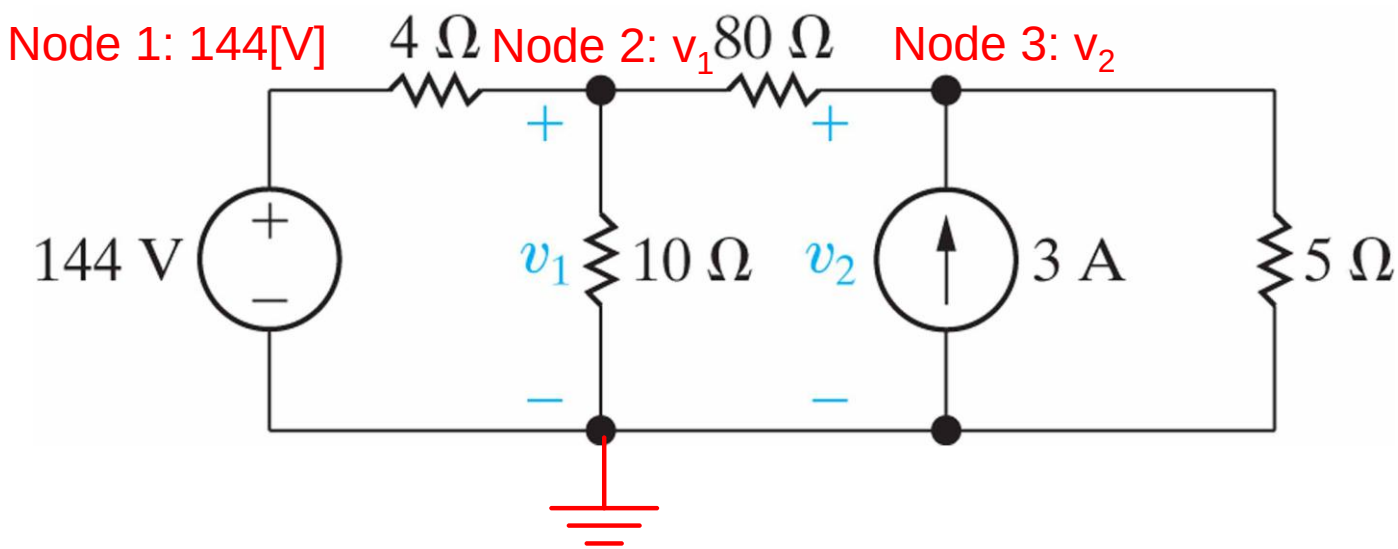

$$\frac{v_1-144}{4}+\frac{v_1}{10}+\frac{v_1-v_2}{80}=0$$

$$\frac{v_2-v_1}{80}+\frac{v_2}{5}-3=0$$

$$\rightarrow \quad 29v_1-v_2=2880 \qquad -v_1+17v_2=240$$

$$\rightarrow \left[\begin{array}{cc|c} 29 & -1 & 2880 \\ -1 & 17 & 240 \end{array}\right] \rightarrow \left[\begin{array}{cc|c} 1 & 0 & 100 \\ 0 & 1 & 20 \end{array}\right] \rightarrow \begin{array}{l} v_1=100 \\ v_2=20 \end{array}$$

Ch4. II. Circuit Analysis Techniques – Nodal Analysis

Example 3.

Calculate the currents.

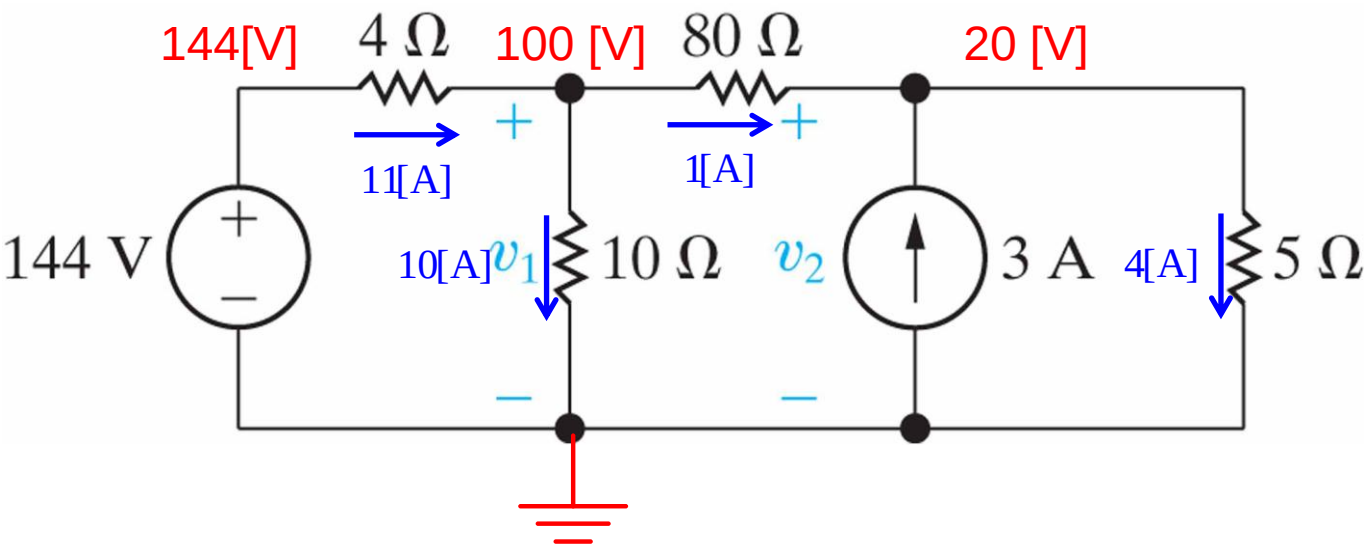

Ch4. II. Circuit Analysis Techniques – Nodal Analysis

For circuits with only independent sources the circuit matrix is symmetric. The diagonal elements are positive and the off-diagonal elements are negative and symmetric about the diagonal. Consider the three circuit matrices in the previous examples:

1.

$$\left[\begin{array}{cc:c} 8 & -1 & 50 \\ -1 & 4 & 10 \end{array}\right]$$

2.

$$\left[\begin{array}{ccc:c} 7 & -4 & -1 & 0 \\ -2 & 3 & -1 & 100 \\ -1 & -2 & 7 & 0 \end{array}\right] \rightarrow \left[\begin{array}{ccc:c} 7 & -4 & -1 & 0 \\ -4 & 6 & -2 & 200 \\ -1 & -2 & 7 & 0 \end{array}\right]$$

3.

$$\left[\begin{array}{cc:c} 29 & -1 & 2880 \\ -1 & 17 & 240 \end{array}\right]$$

NODAL ANALYSIS: DEPENDENT SOURCES

Ch4. II. Circuit Analysis Techniques – Nodal Analysis with Dependent Sources

For circuits with a dependent source, nodal analysis proceeds in the same manner as before. The only difference is that the dependent source must be expressed in terms of node voltages.

Example 4.

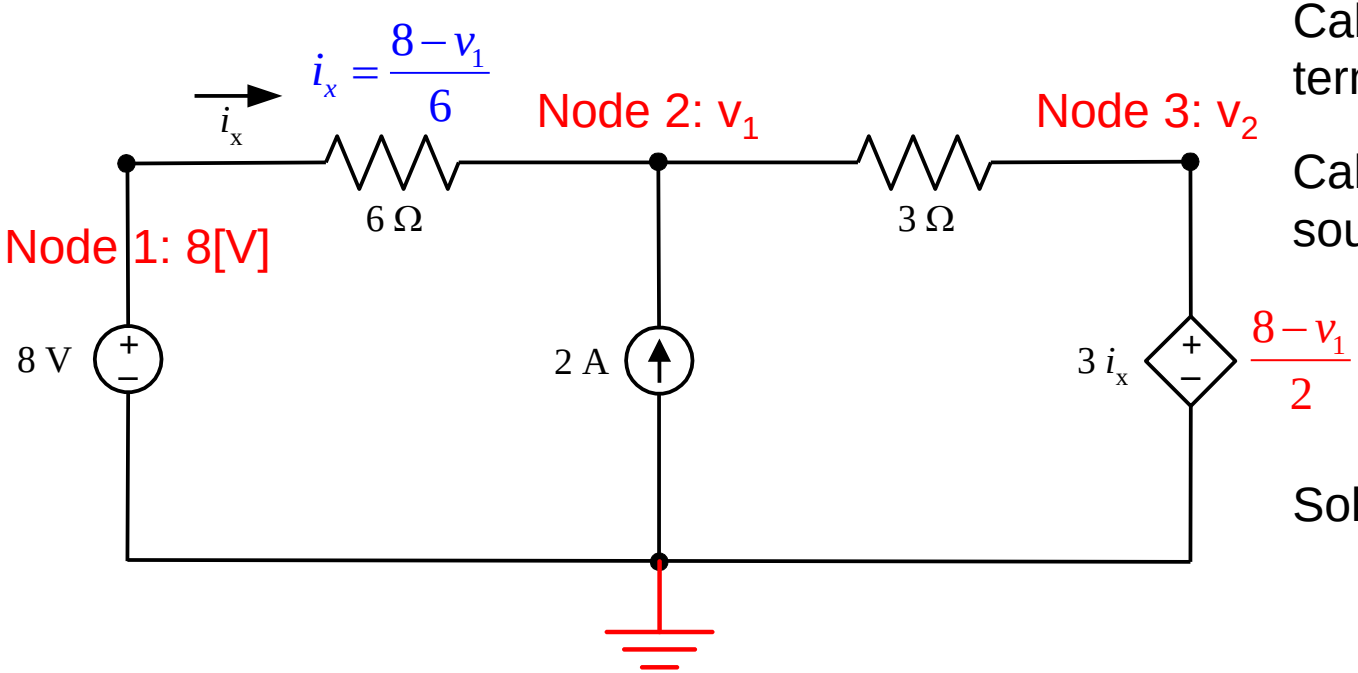

Calculate current i_x in terms of node voltages.

Calculate dependent source value.

Solve as previously.

NODAL ANALYSIS: DEPENDENT SOURCES

Ch4. II. Circuit Analysis Techniques – Nodal Analysis with Dependent Sources

Example 4.

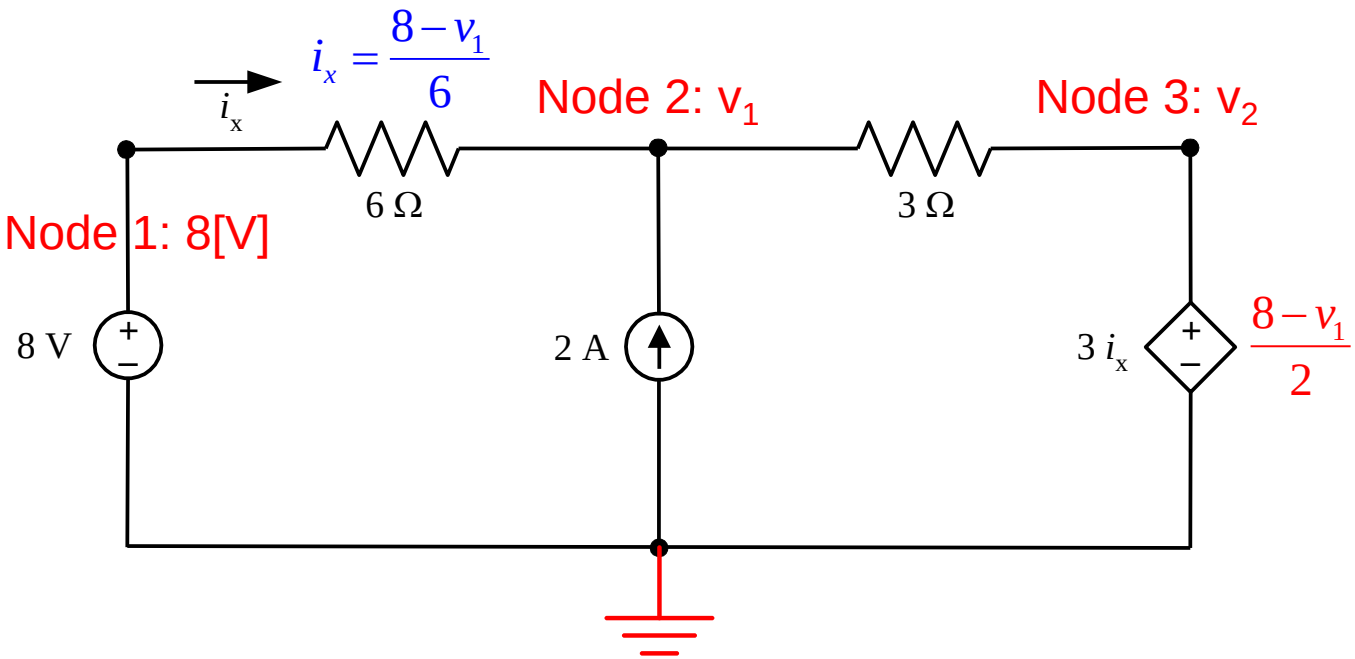

Node 2: $\frac{v_1 - 8}{6} + \frac{v_1 - v_2}{3} = 2$ Node 3: $v_2 = \frac{8 - v_1}{2}$

NODAL ANALYSIS: DEPENDENT SOURCES

Ch4. II. Circuit Analysis Techniques – Nodal Analysis with Dependent Sources

Example 4.

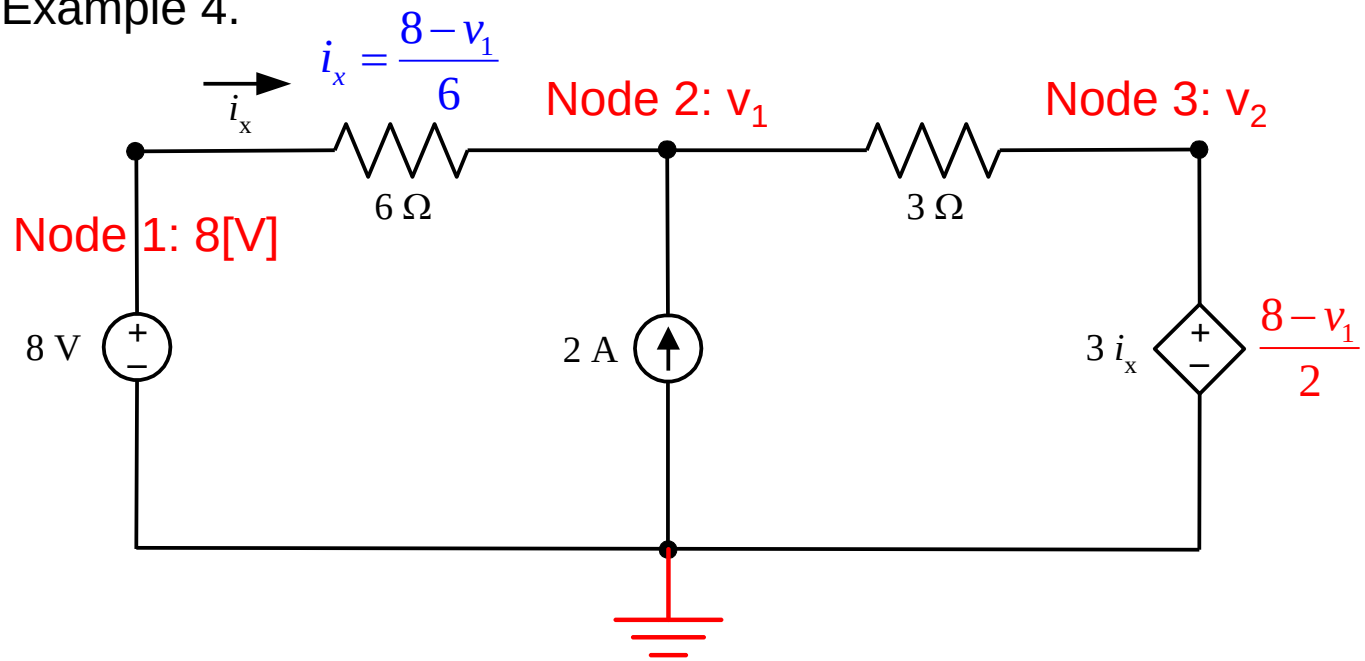

$$\frac{v_1 - 8}{6} + \frac{v_1 - v_2}{3} = 2$$

$$v_2 = \frac{8 - v_1}{2}$$

$$\rightarrow \begin{aligned} 3v_1 - 2v_2 &= 20 \\ v_1 + 2v_2 &= 8 \end{aligned} \rightarrow \left[\begin{array}{cc|c} 3 & -2 & 20 \\ 1 & 2 & 8 \end{array}\right] \rightarrow \left[\begin{array}{cc|c} 1 & 0 & 7 \\ 0 & 1 & 1/2 \end{array}\right] \rightarrow \begin{aligned} v_1 &= 7 \\ v_2 &= \frac{1}{2} \end{aligned}$$

NODAL ANALYSIS: DEPENDENT SOURCES

Ch4. II. Circuit Analysis Techniques – Nodal Analysis with Dependent Sources

Example 4.

Calculate the currents.

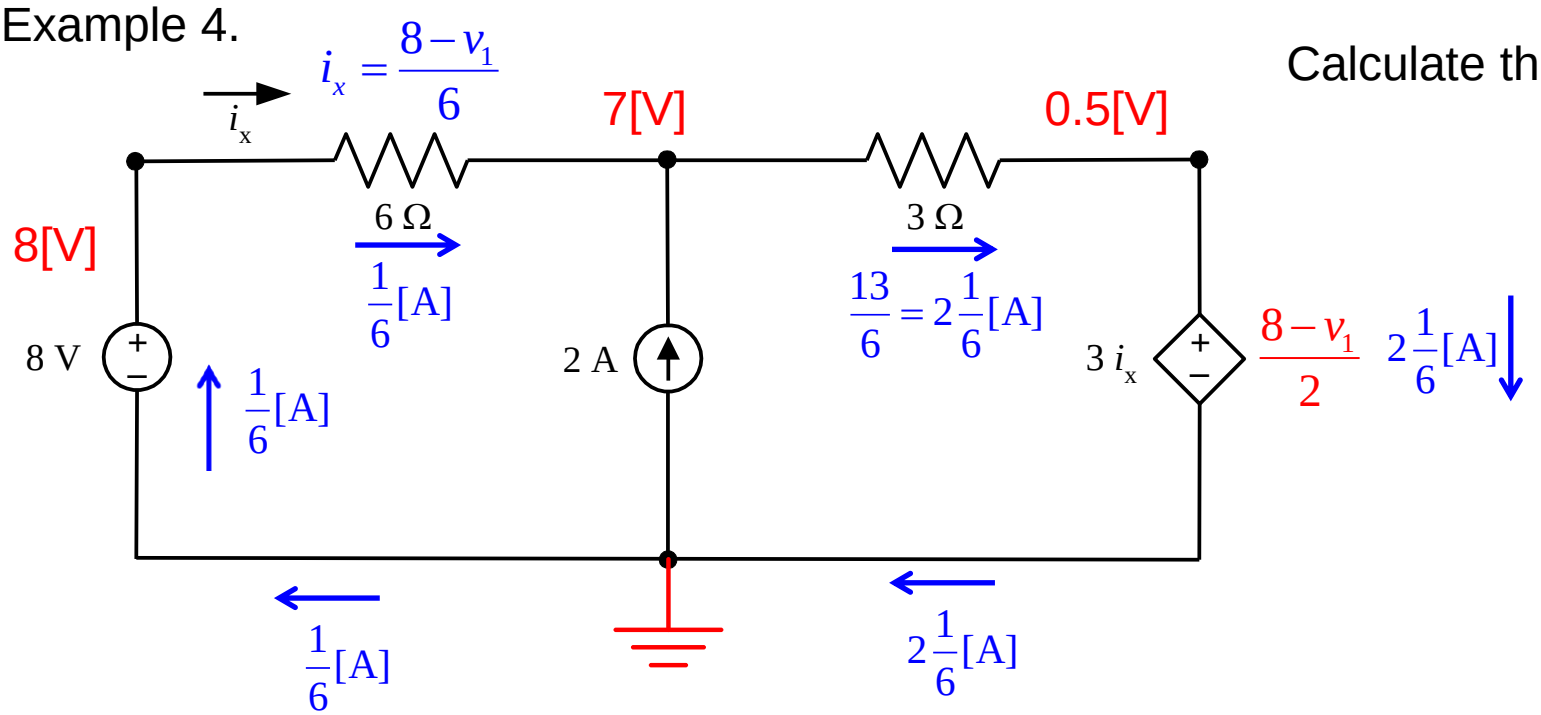

NODAL ANALYSIS: DEPENDENT SOURCES

Ch4. II. Circuit Analysis Techniques – Nodal Analysis with Dependent Sources

Example 5.

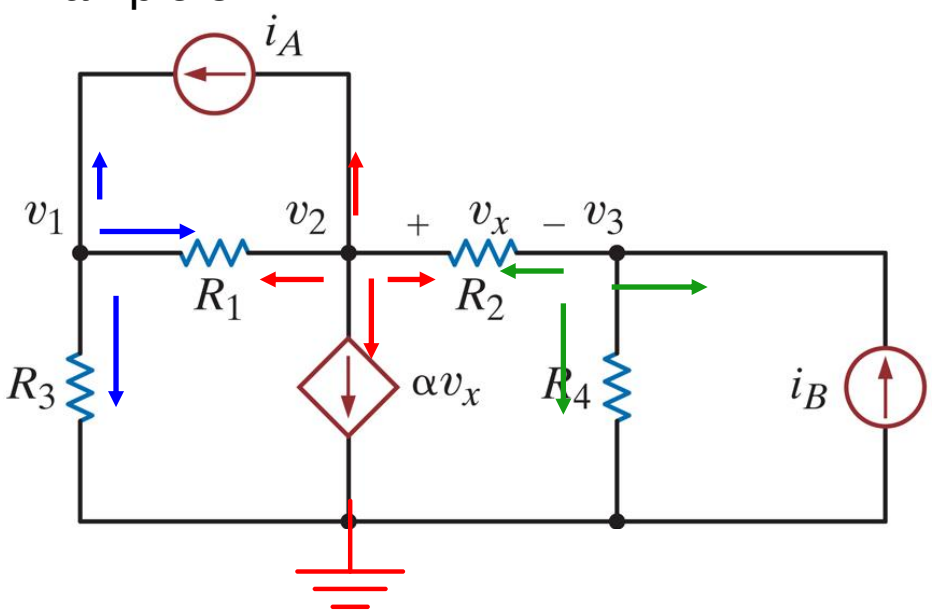

$$\boldsymbol{R_1 = 1k\Omega,\ R_2 = R_3 = 2k\Omega,}$$
$$\boldsymbol{R_4 = 4k\Omega, i_A = 2mA, i_B = 4mA,}$$
$$\alpha = 2[\boldsymbol{A/V}]$$

Dependent source: $\alpha v_x = 2(v_2 - v_3)$

$$\frac{v_1}{2000} + \frac{v_1 - v_2}{1000} - 0.004 = 0$$

$$\frac{v_2 - v_1}{1000} + 0.004 + 2(v_2 - v_3) + \frac{v_2 - v_3}{2000} = 0$$

$$\frac{v_3 - v_2}{2000} + \frac{v_3}{4000} - 0.004 = 0$$

NODAL ANALYSIS: DEPENDENT SOURCES

Ch4. II. Circuit Analysis Techniques – Nodal Analysis with Dependent Sources

Example 5.

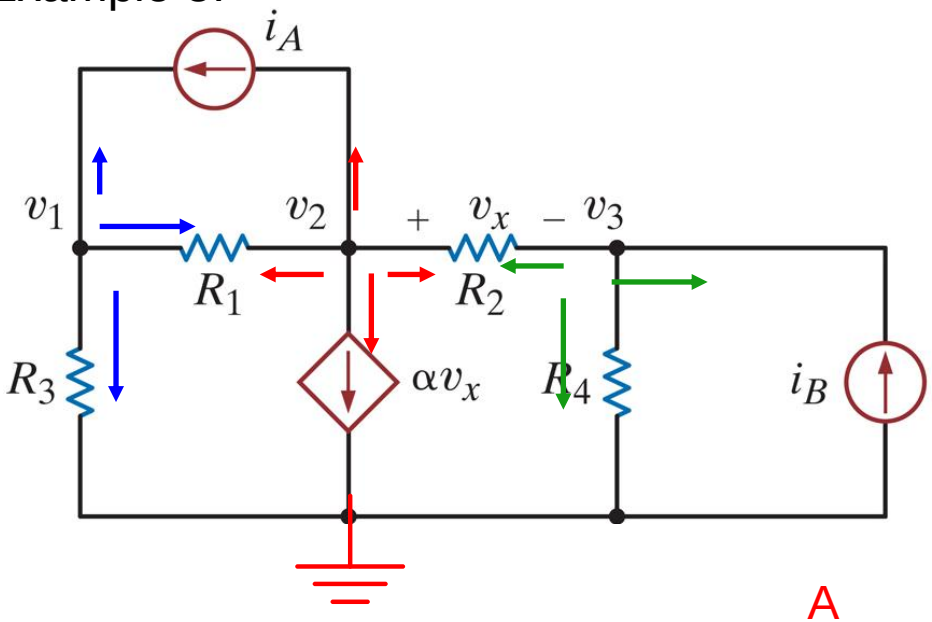

$$\frac{v_1}{2000}+\frac{v_1-v_2}{1000}-0.004=0$$

$$\frac{v_2-v_1}{1000}+0.004+2\left(v_2-v_3\right)+\frac{v_2-v_3}{2000}=0$$

$$\frac{v_3-v_2}{2000}+\frac{v_3}{4000}-0.004=0$$

A \ b

$$\rightarrow \begin{aligned} 3v_1-2v_2&=8\\ -2v_1+4003v_2-4001v_3&=-8\\ -2v_2+3v_3&=16 \end{aligned} \rightarrow \left[\begin{array}{ccc|c} 3 & -2 & 0 & 8\\ -2 & 4003 & -4001 & -8\\ 0 & -2 & 3 & 16 \end{array}\right] \rightarrow \mathbf{A}\backslash\mathbf{b}=\begin{bmatrix}13.3267\\15.9900\\15.9933\end{bmatrix} \rightarrow \begin{aligned} v_1&=13.3267[\mathrm{V}]\\ v_2&=15.9900[\mathrm{V}]\\ v_3&=15.9933[\mathrm{V}] \end{aligned}$$

NODAL ANALYSIS: SUPERNODES

Ch4. II. Circuit Analysis Techniques – Nodal Analysis with Supernodes

Example 6.

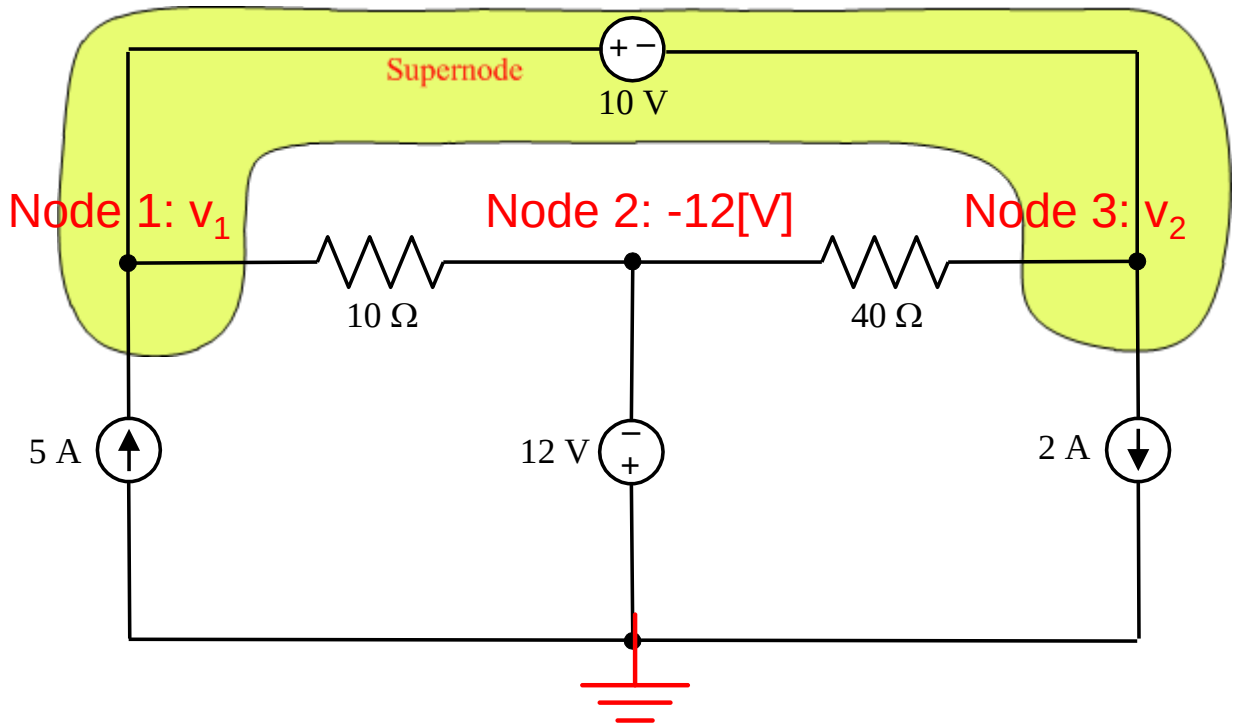

1. Select reference node
2. Identify other nodes.
3. It is impossible to specify the current in the 10V source, thus we create a supernode.
4. Write an equation relating nodes in the supernode.

$$v_1 = v_2 + 10$$

5. Write the KCL equation for the supernode.

$$-5 + \frac{v_1 + 12}{10} + \frac{v_2 + 12}{40} + 2 = 0$$

NODAL ANALYSIS: SUPERNODES

Ch4. II. Circuit Analysis Techniques – Nodal Analysis with Supernodes

Example 6.

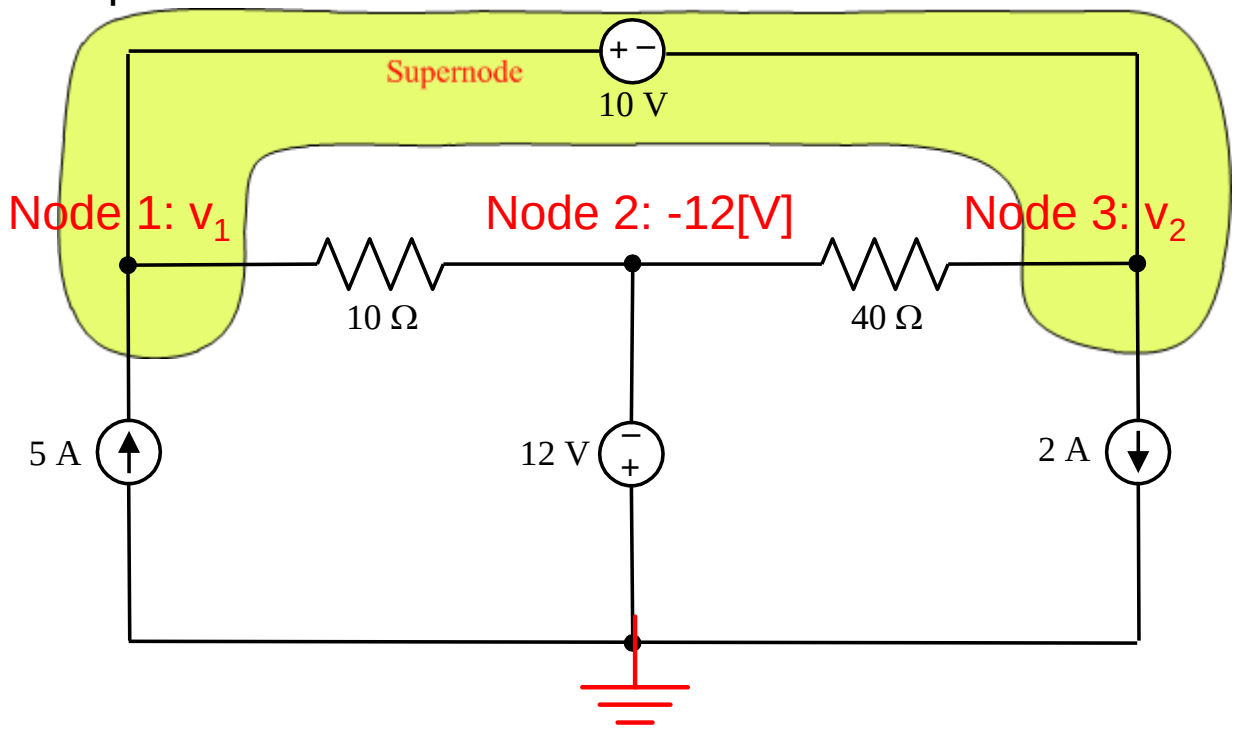

$$v_1 = v_2 + 10$$

$$-5 + \frac{v_1 + 12}{10} + \frac{v_2 + 12}{40} + 2 = 0$$

$$v_1 - v_2 = 10$$
$$4v_1 + v_2 = 60$$

$$\rightarrow \begin{array}{c} \quad\quad \text{A} \quad\quad \text{b} \\ \left[\begin{array}{cc:c} 1 & -1 & 10 \\ 4 & 1 & 60 \end{array}\right] \end{array} \rightarrow \mathbf{A} \backslash \mathbf{b} = \begin{bmatrix} 14 \\ 4 \end{bmatrix} \rightarrow \begin{array}{l} v_1 = 14[\text{V}] \\ v_2 = 4[\text{V}] \end{array}$$

NODAL ANALYSIS: SUPERNODES

Ch4. II. Circuit Analysis Techniques – Nodal Analysis with Supernodes

Example 6.

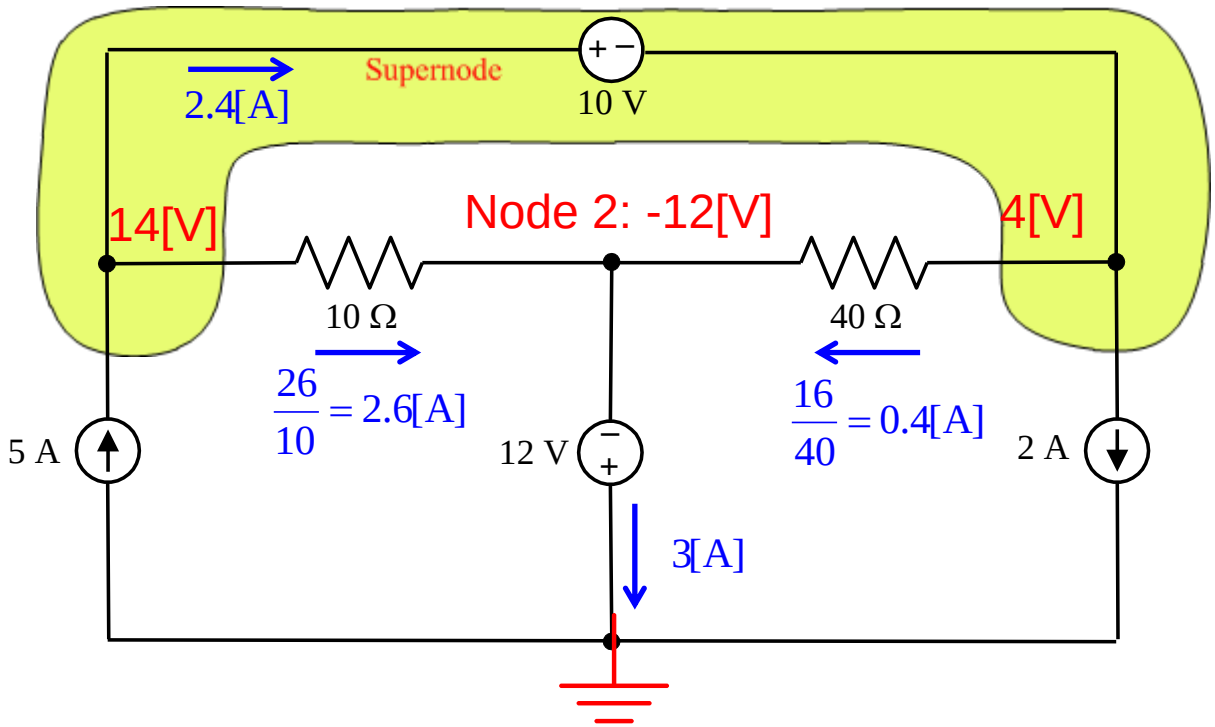

Calculate the currents.

Which sources supply power?

The 12V and 5A sources supply power because current comes out of their positive terminals.

The 10V and 2A sources absorb power because current goes into their positive terminals.

NODAL ANALYSIS: SUPERNODES

Ch4. II. Circuit Analysis Techniques – Nodal Analysis with Supernodes

- Nodal Analysis with Supernodes Summary
  - Used when a branch between two non-reference nodes contains a voltage source.
  - Encircle the voltage source and the two connecting nodes to from a supernode.
  - Write the equation that defines the voltage relationship between the two non-reference nodes as a result of the presence of the voltage source.
  - Write the KCL equation for the supernode.
  - If the voltage source is dependent, then the controlling equation for the dependent source is also required.

NODAL ANALYSIS: SUPERNODES

Ch4. II. Circuit Analysis Techniques – Nodal Analysis with Supernodes

Example 7.

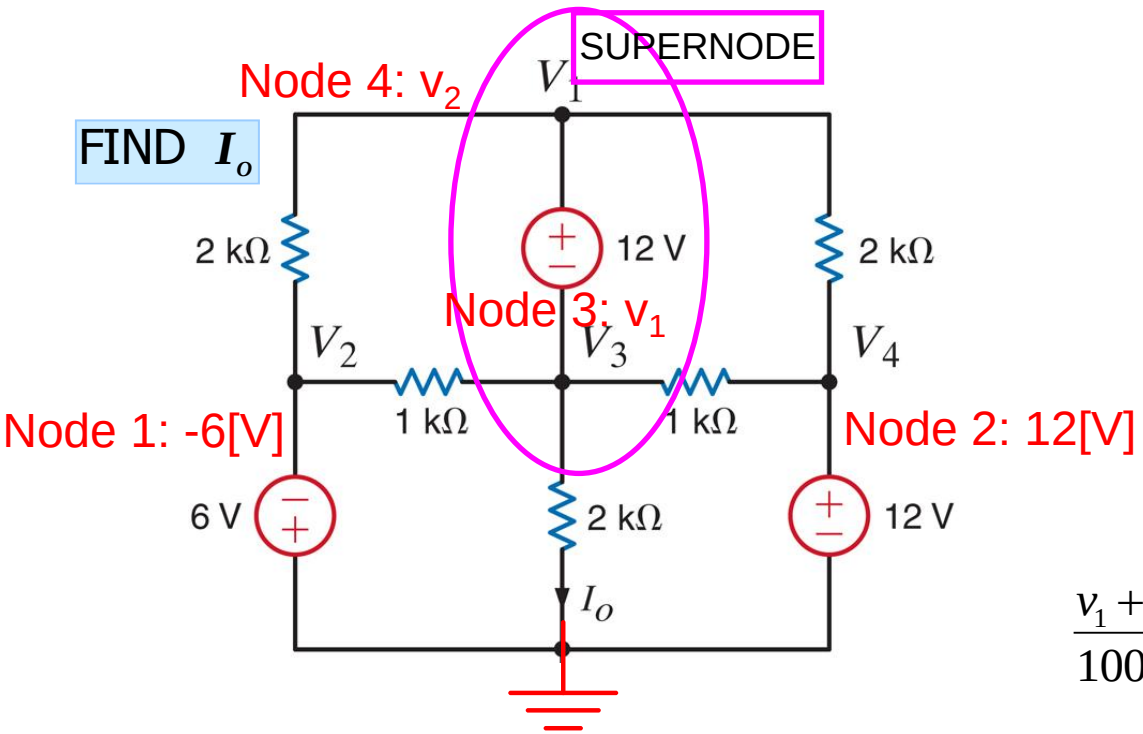

1. Select reference node
2. Identify other nodes.
3. Identify supernode.
4. Write an equation relating nodes in the supernode.

$$v_2 = v_1 + 12$$

5. Write the KCL equation for the supernode.

$$\frac{v_1+6}{1000} + \frac{v_1}{2000} + \frac{v_1-12}{1000} + \frac{v_2-12}{2000} + \frac{v_2+6}{2000} = 0$$

NODAL ANALYSIS: SUPERNODES

Ch4. II. Circuit Analysis Techniques – Nodal Analysis with Supernodes

Example 7.

FIND I_o

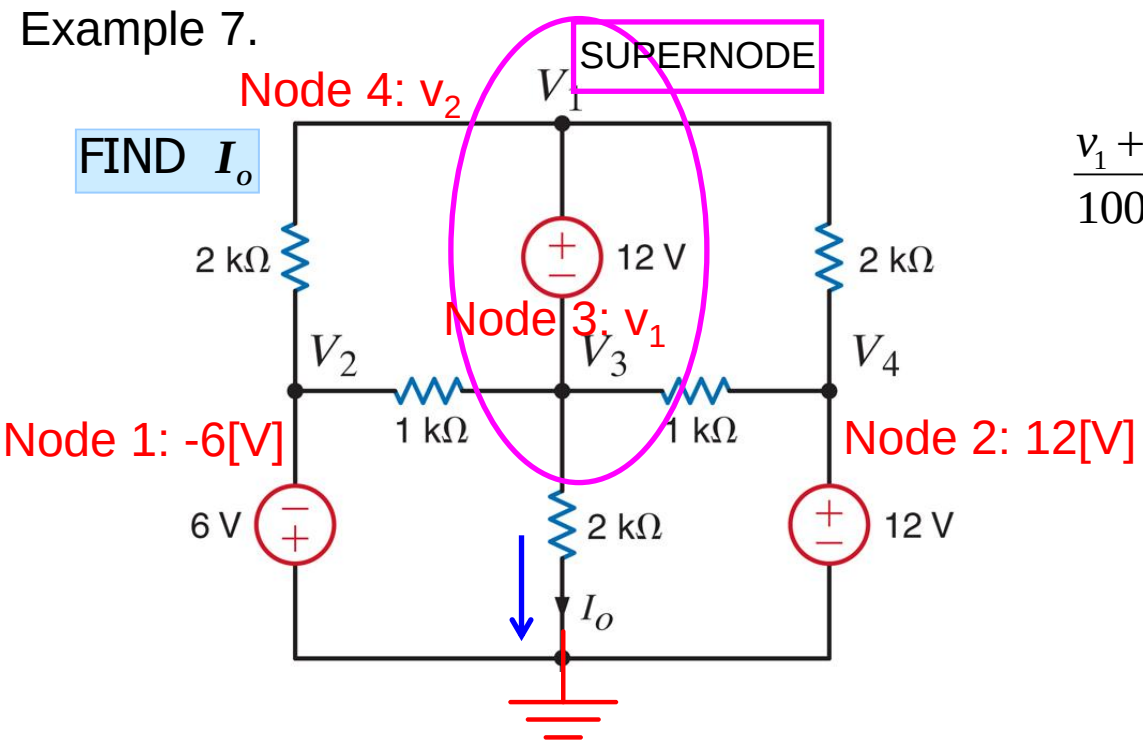

$$v_2 = v_1 + 12$$

$$\frac{v_1+6}{1000} + \frac{v_1}{2000} + \frac{v_1-12}{1000} + \frac{v_2-12}{2000} + \frac{v_2+6}{2000} = 0$$

Find I_0

$$I_0 = \frac{v_1}{2000} = \frac{-0.8571}{2000} = -4.29[\text{mA}]$$

$$-v_1 + v_2 = 12$$
$$5v_1 + 2v_2 = 18$$

$$\rightarrow \begin{array}{c} \text{A} \quad \backslash \text{ b} \\ \left[\begin{array}{cc:c} -1 & 1 & 12 \\ 5 & 2 & 18 \end{array}\right] \end{array} \rightarrow \mathbf{A} \backslash \mathbf{b} = \begin{bmatrix} -0.8571 \\ 11.1429 \end{bmatrix} \rightarrow \begin{array}{l} v_1 = -0.8571[\text{V}] \\ v_2 = 11.1429[\text{V}] \end{array}$$

NODAL ANALYSIS: SUPERNODES

Ch4. II. Circuit Analysis Techniques – Nodal Analysis with Supernodes

The supernode can contain a dependent source.

Example 8.

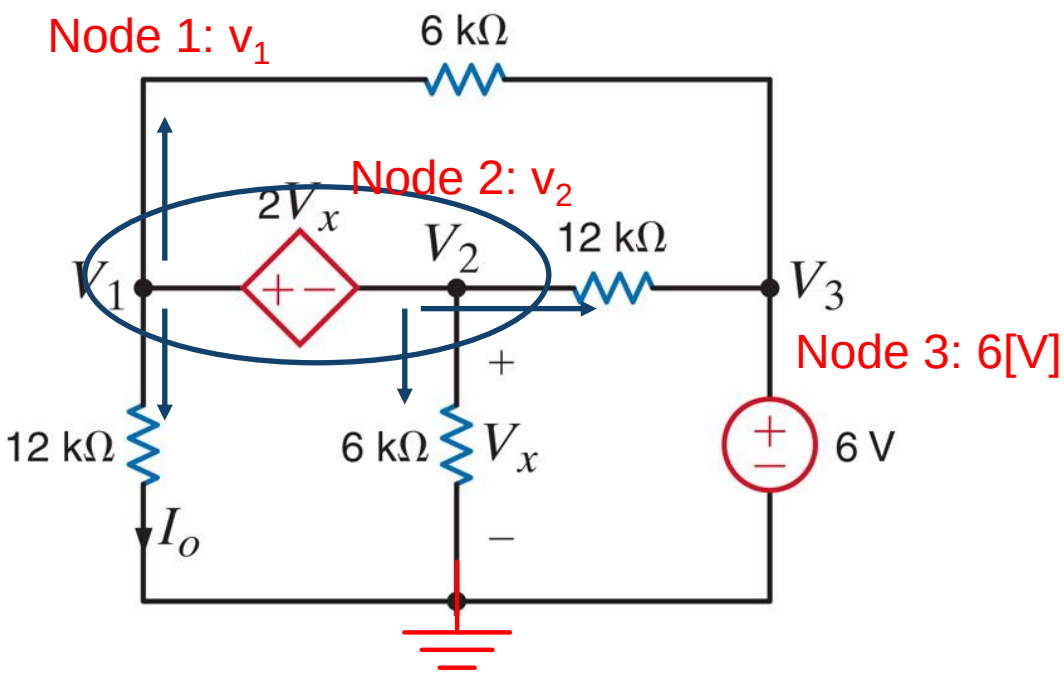

1. Select reference node
2. Identify other nodes.
3. Identify supernode.
4. Write equation for the dependent source.

$$2V_x = 2v_2$$

5. Write an equation relating nodes in the supernode.

$$v_1 = v_2 + 2v_2$$

6. Write the KCL equation for the supernode.

$$\frac{v_1 - 6}{6000} + \frac{v_1}{12000} + \frac{v_2}{6000} + \frac{v_2 - 6}{12000} = 0$$

NODAL ANALYSIS: SUPERNODES

Ch4. II. Circuit Analysis Techniques – Nodal Analysis with Supernodes

The supernode can contain a dependent source.

Example 8.

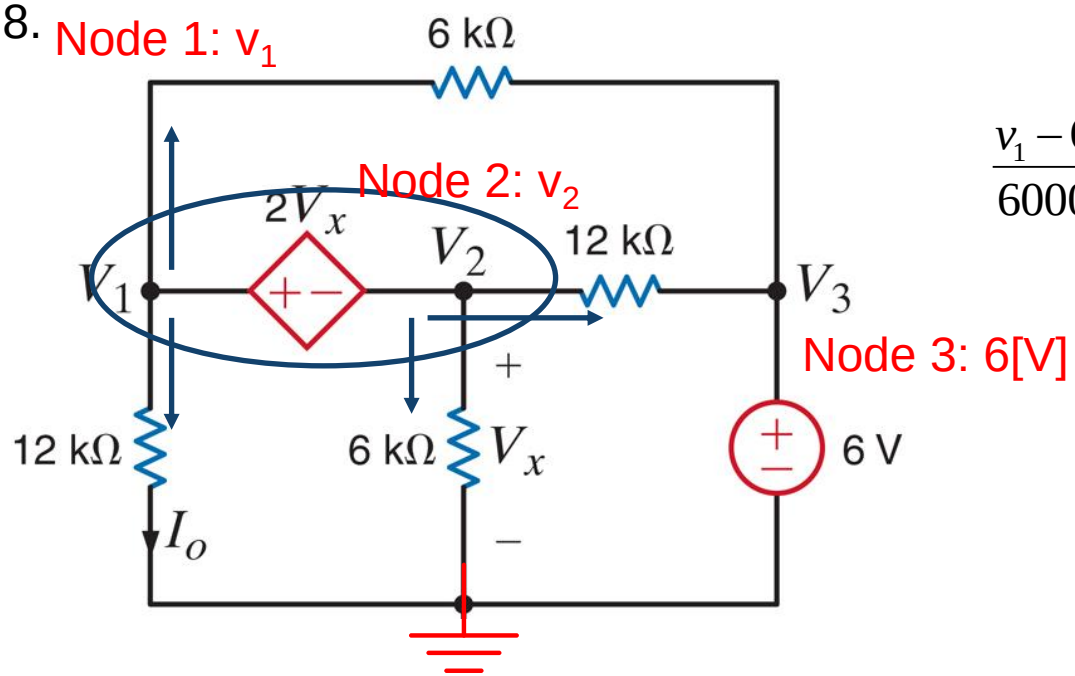

$$v_1 = v_2 + 2v_2$$

$$\frac{v_1 - 6}{6000} + \frac{v_1}{12000} + \frac{v_2}{6000} + \frac{v_2 - 6}{12000} = 0$$

$$v_1 - 3v_2 = 0$$
$$3v_1 + 3v_2 = 18$$

$$\rightarrow \begin{array}{c} \quad\text{A} \qquad \text{\ b} \\ \left[\begin{array}{cc|c} 1 & -3 & 0 \\ 3 & 3 & 18 \end{array}\right] \end{array} \rightarrow \mathbf{A} \backslash \mathbf{b} = \begin{bmatrix} 4.5 \\ 1.5 \end{bmatrix} \rightarrow \begin{array}{l} v_1 = 4.5[\text{V}] \\ v_2 = 1.5[\text{V}] \end{array}$$

NODAL ANALYSIS: SUPERNODES

Ch4. II. Circuit Analysis Techniques – Nodal Analysis with Supernodes

The supernode can contain a dependent source.

Example 8. Find the currents.

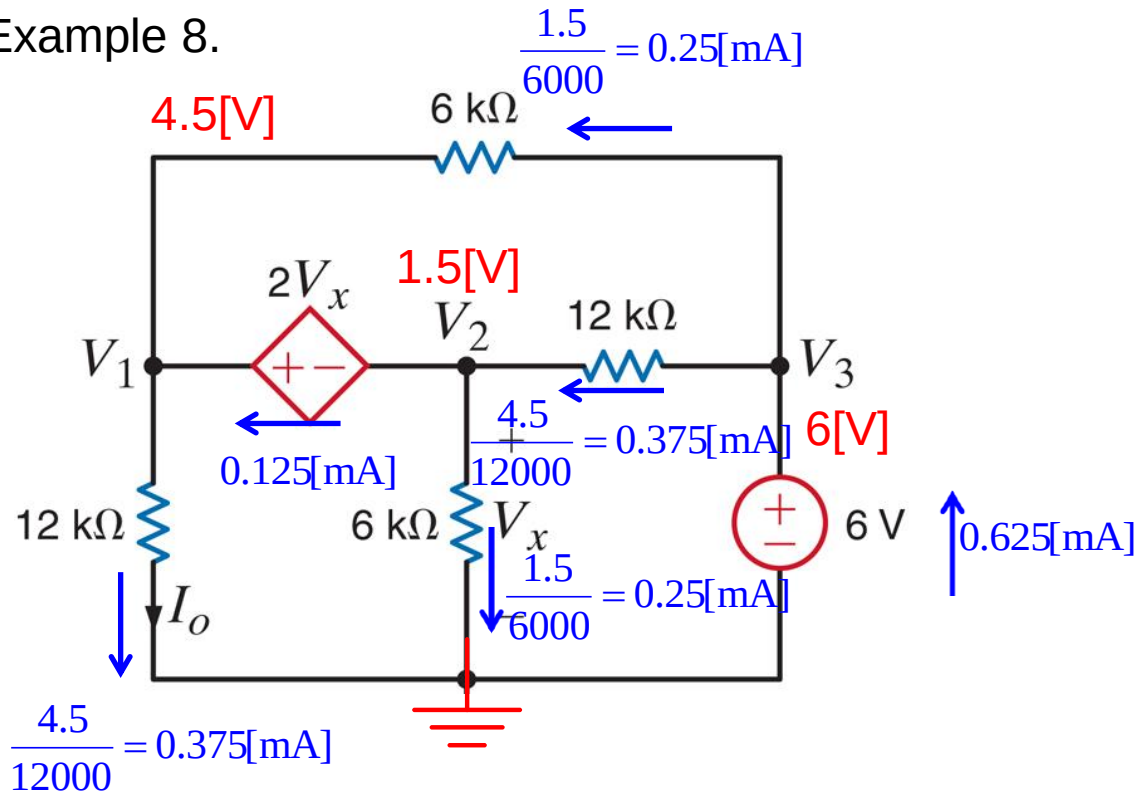

MESH ANALYSIS: PLANAR CIRCUITS

Ch4. III. Circuit Analysis Techniques – Mesh Analysis

› Mesh analysis can only be applied to planar network circuits (circuits that can be drawn on a plane without having one element or conductor crossing over another. Recall previous description of planar circuits.

Planar Circuit

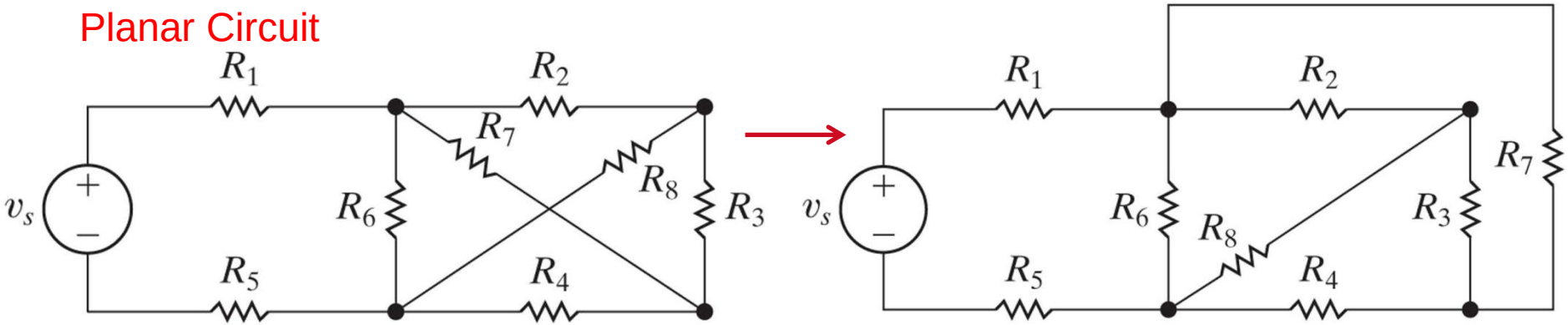

(b)

Non-Planar Circuit

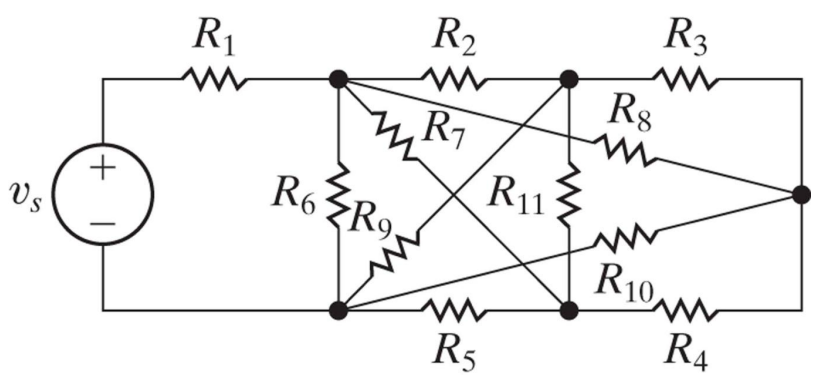

MESH ANALYSIS: MESH DEFINITION

Ch4. III. Circuit Analysis Techniques – Mesh Analysis

› A mesh is a loop that does not contain any other loops.

Do the following highlighted branches form a mesh ?

Not a loop nor mesh.

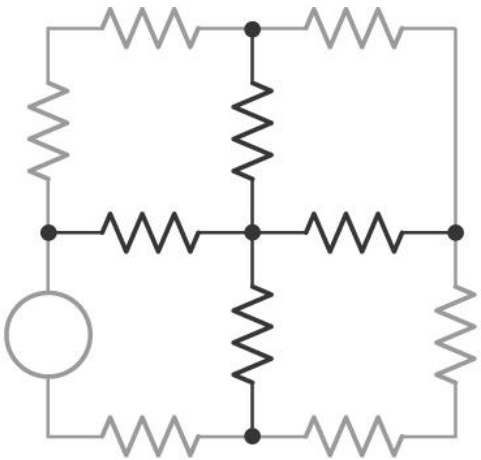

Not a loop nor mesh.

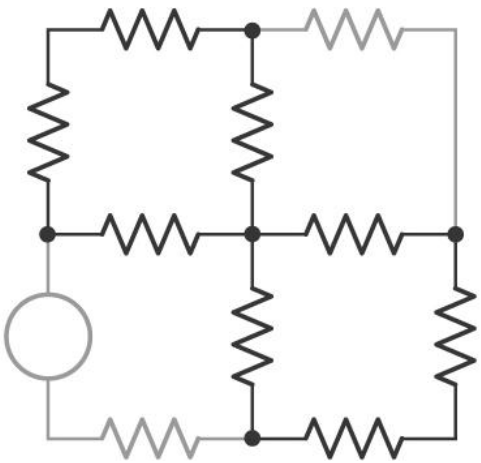

A loop but not a mesh.

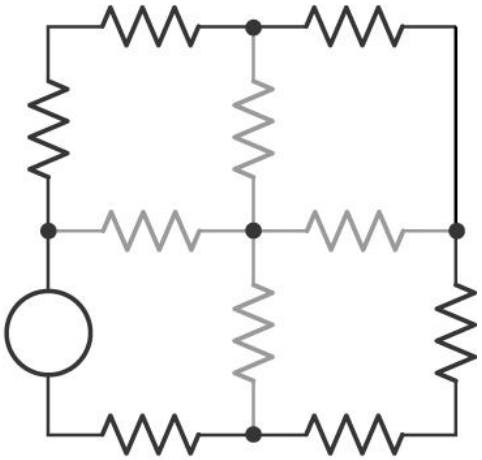

MESH ANALYSIS: MESH DEFINITION

Ch4. III. Circuit Analysis Techniques – Mesh Analysis

› A mesh is a loop that does not contain any other loops.

Do the following highlighted branches form a mesh ?

A loop but not a mesh.

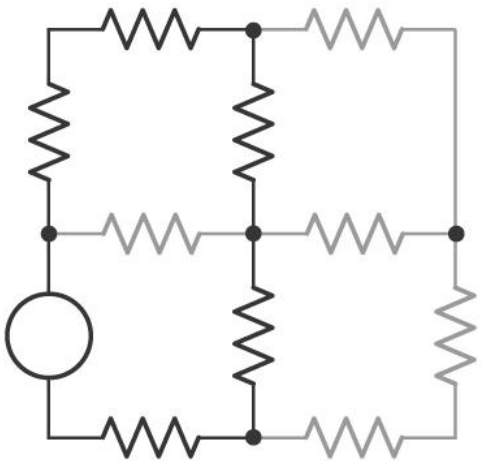

Both a loop and a mesh.

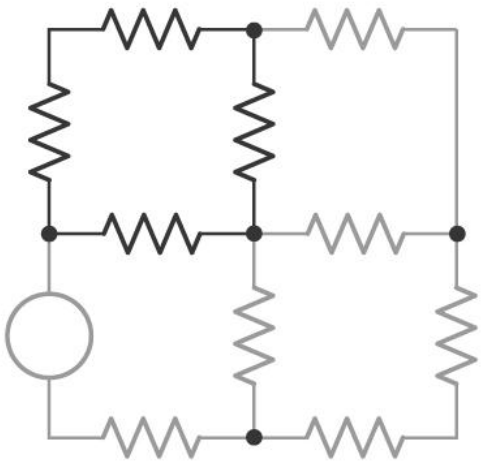

Both a loop and a mesh.

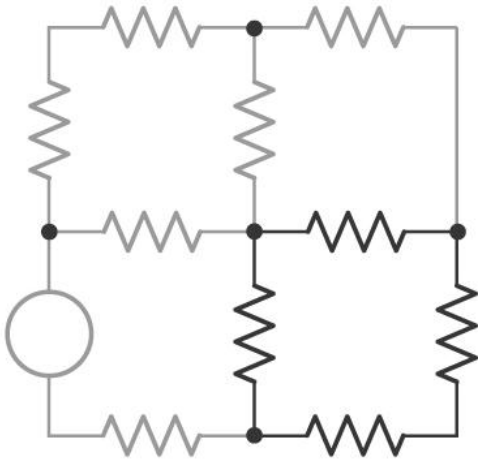

MESH ANALYSIS: MESH CURRENTS

Ch4. III. Circuit Analysis Techniques – Mesh Analysis

› A mesh current is a conceptual current that flows through the elements in a mesh. To find the true or actual current flowing through a circuit element all of the mesh currents in the circuit element must be added together.

In the circuit below, assume mesh current i_1 is 2 A and mesh current i_2 is 3 A, find all currents in the circuit.

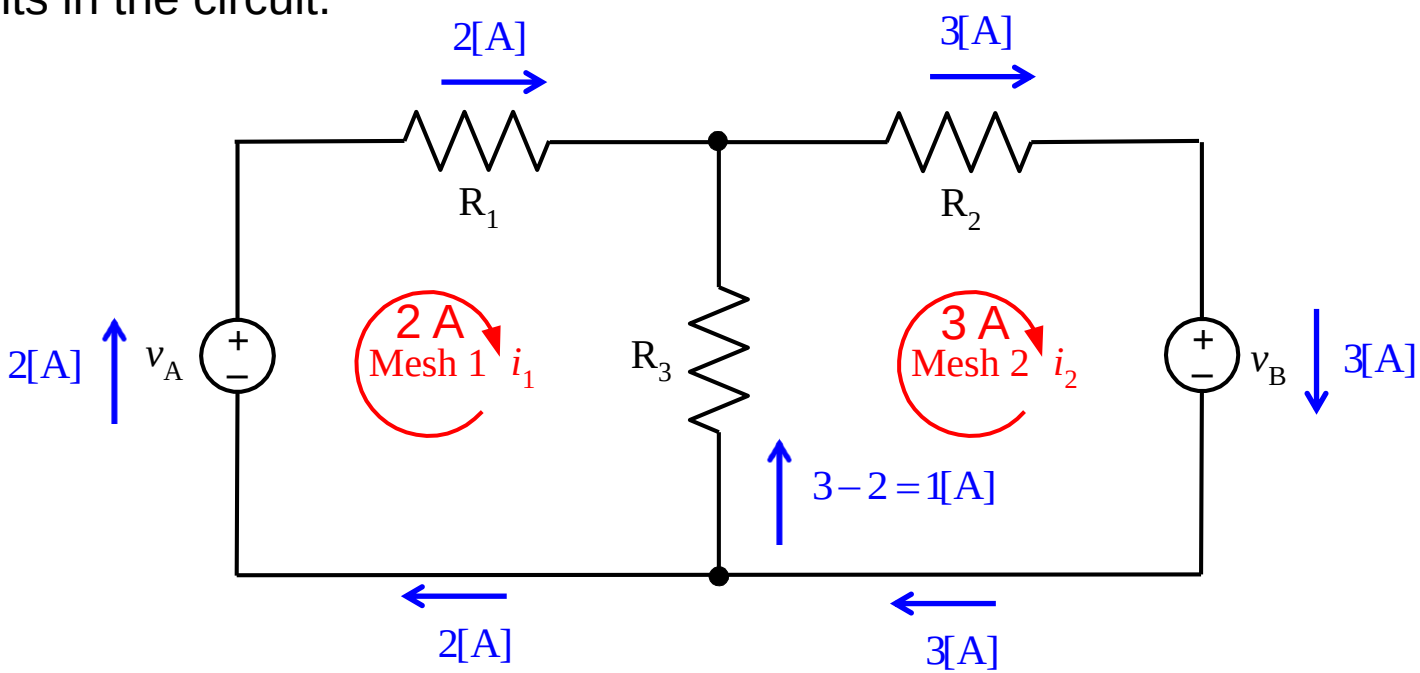

MESH ANALYSIS: MESH CURRENTS

Ch4. III. Circuit Analysis Techniques – Mesh Analysis

› A mesh current is a conceptual current that flows through the elements in a mesh. To find the true or actual current flowing through a circuit element all of the mesh currents in the circuit element must be added together.

Repeat: find all currents assuming mesh current i_1 is 3 A and mesh current i_2 is 2 A.

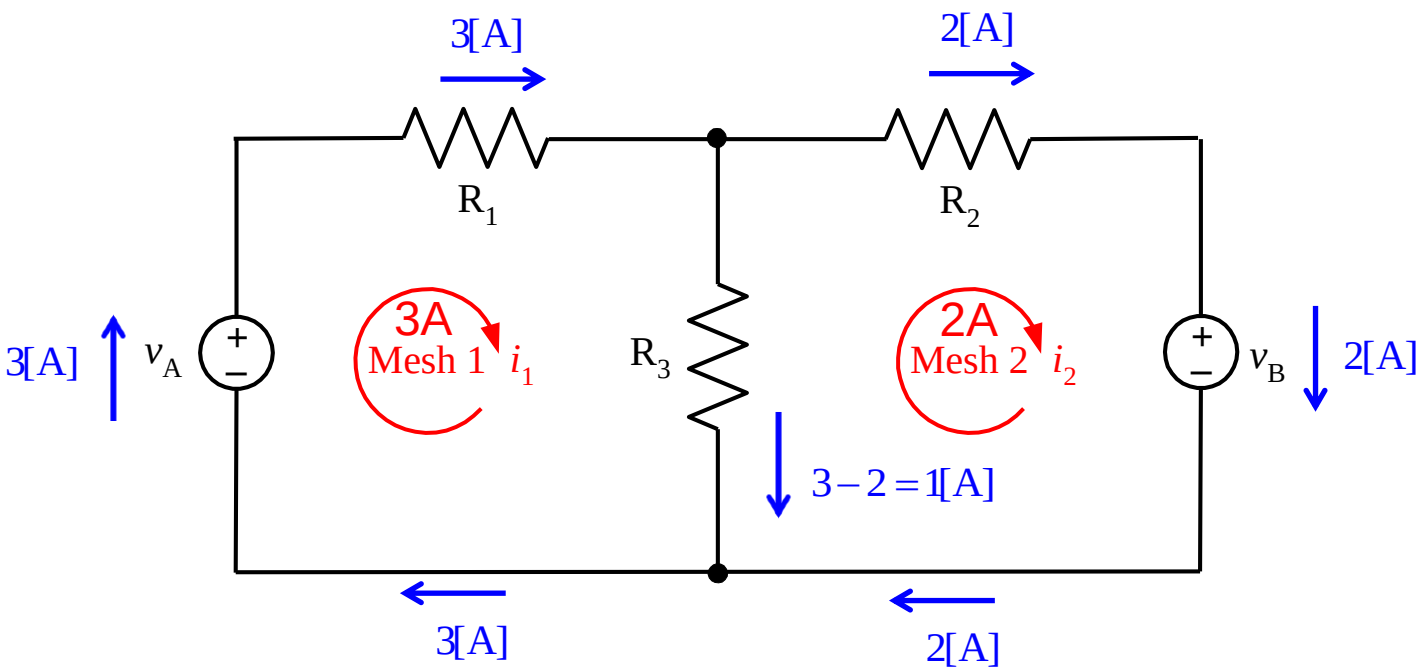

MESH ANALYSIS: MESH EQUATIONS

Ch4. III. Circuit Analysis Techniques – Mesh Analysis

› Mesh Analysis Steps

1. Label all mesh currents.
2. Write the KVL equation for each mesh. Sum the voltage drops around the loop.
3. Solve the set of linear equations.

Example 1.

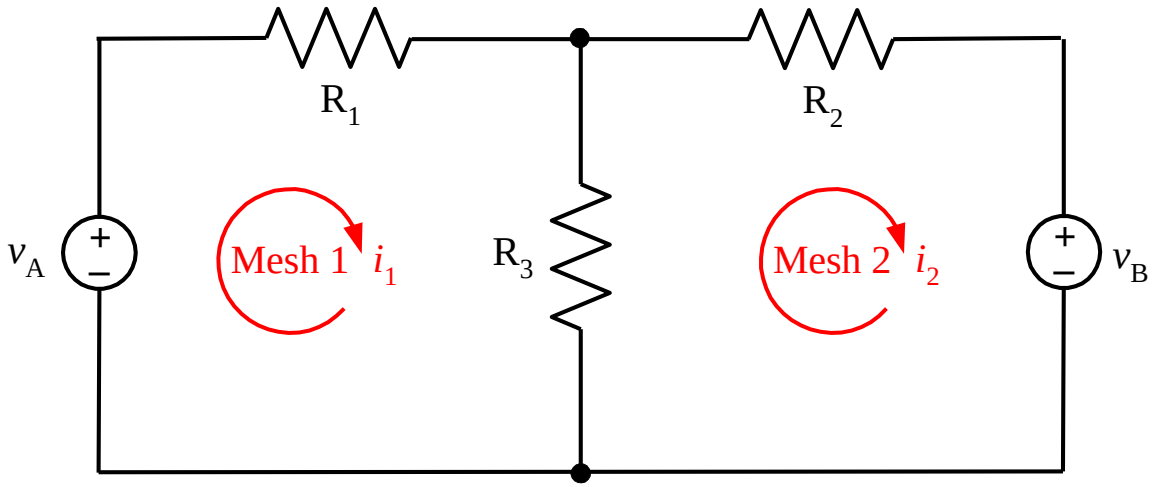

Two equations in two unknowns.

KVL for mesh 1:

$$-v_A + R_1 i_1 + R_3 (i_1 - i_2) = 0$$

KVL for mesh 2:

$$R_3 (i_2 - i_1) + R_2 i_2 + v_B = 0$$

MESH ANALYSIS: MESH EQUATIONS

Ch4. III. Circuit Analysis Techniques – Mesh Analysis

› Mesh Analysis Steps

1. Label all mesh currents.
2. Write the KVL equation for each mesh.
3. Solve the set of linear equations.

Example 2.

Three equations in three unknowns.

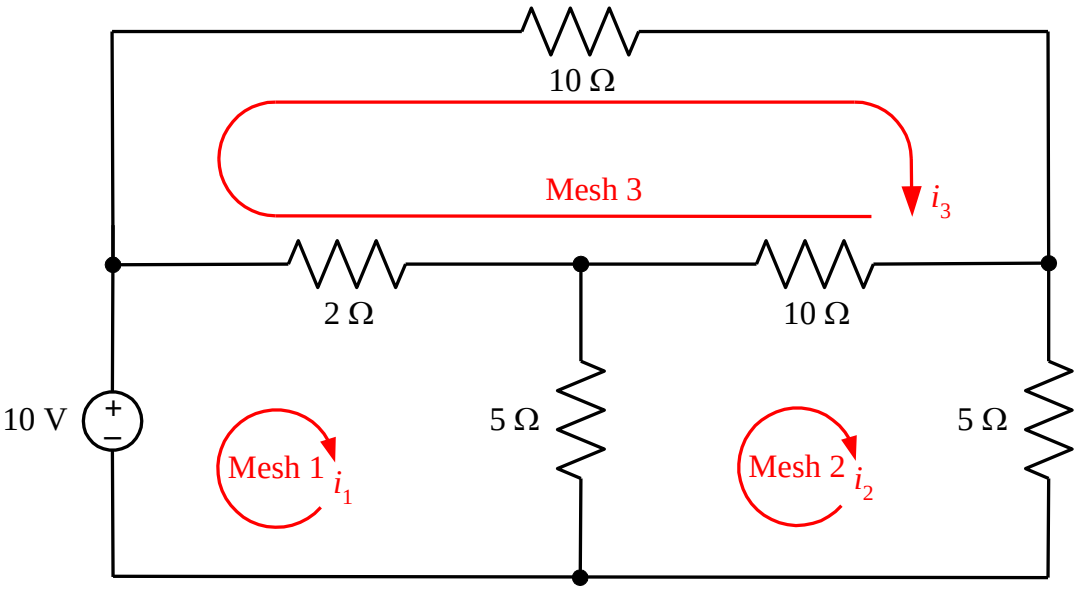

$$\text{Mesh 1: } -10 + 2(i_1 - i_3) + 5(i_1 - i_2) = 0$$

$$\text{Mesh 2: } 5(i_2 - i_1) + 10(i_2 - i_3) + 5i_2 = 0$$

$$\text{Mesh 3: } 10(i_3 - i_2) + 2(i_3 - i_1) + 10i_3 = 0$$

Ch4. III. Circuit Analysis Techniques – Mesh Analysis

Three equations in three unknowns.

Mesh 1: $-10+2(i_1-i_3)+5(i_1-i_2)=0$

Mesh 2: $5(i_2-i_1)+10(i_2-i_3)+5i_2=0$

Mesh 3: $10(i_3-i_2)+2(i_3-i_1)+10i_3=0$

$$\rightarrow \begin{aligned} 7i_1-5i_2-2i_3&=10\\ -5i_1+20i_2-10i_3&=0\\ -2i_i-10i_2+22i_3&=0 \end{aligned}$$

$$\begin{bmatrix} 7 & -5 & -2 \\ -5 & 20 & -10 \\ -2 & -10 & 22 \end{bmatrix}\begin{bmatrix} i_1 \\ i_2 \\ i_3 \end{bmatrix}=\begin{bmatrix} 10 \\ 0 \\ 0 \end{bmatrix} \rightarrow \begin{array}{c} \begin{array}{ccc|c} \text{A} & & & \text{b} \end{array} \\ \left[\begin{array}{ccc|c} 7 & -5 & -2 & 10 \\ -5 & 20 & -10 & 0 \\ -2 & -10 & 22 & 0 \end{array}\right] \end{array} \rightarrow \mathbf{A}\backslash\mathbf{b}=\begin{bmatrix} 68/31 \\ 26/31 \\ 18/31 \end{bmatrix} \rightarrow \begin{aligned} i_1&=68/31[\text{A}]\\ i_2&=26/31[\text{A}]\\ i_3&=18/31[\text{A}] \end{aligned}$$

Matrix-vector notation

Augmented Matrix

Using Octave/Matlab
(format rat to get fractions)

MESH ANALYSIS: FINDING CURRENTS

Ch4. III. Circuit Analysis Techniques – Mesh Analysis

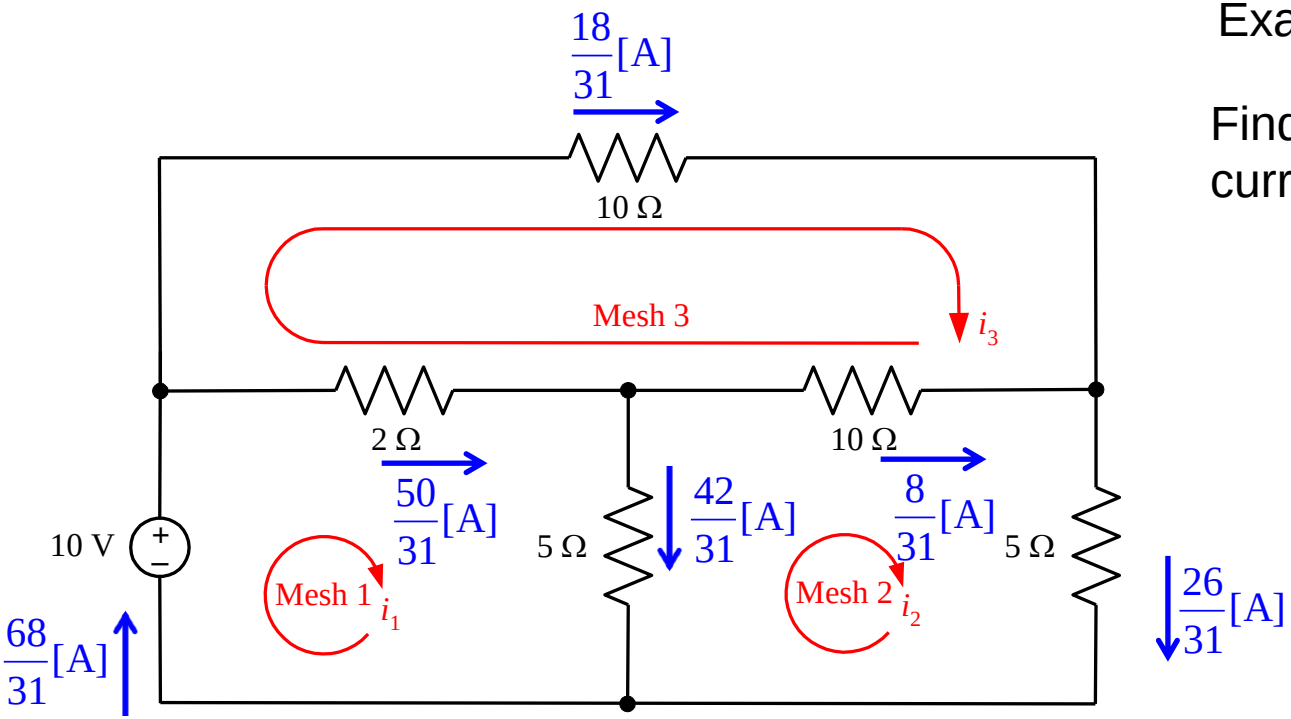

Example 2.

Find currents given mesh currents.

$$i_1 = 68/31[\mathrm{A}]$$
$$i_2 = 26/31[\mathrm{A}]$$
$$i_3 = 18/31[\mathrm{A}]$$

MESH ANALYSIS: FINDING VOLTAGES

Ch4. III. Circuit Analysis Techniques – Mesh Analysis

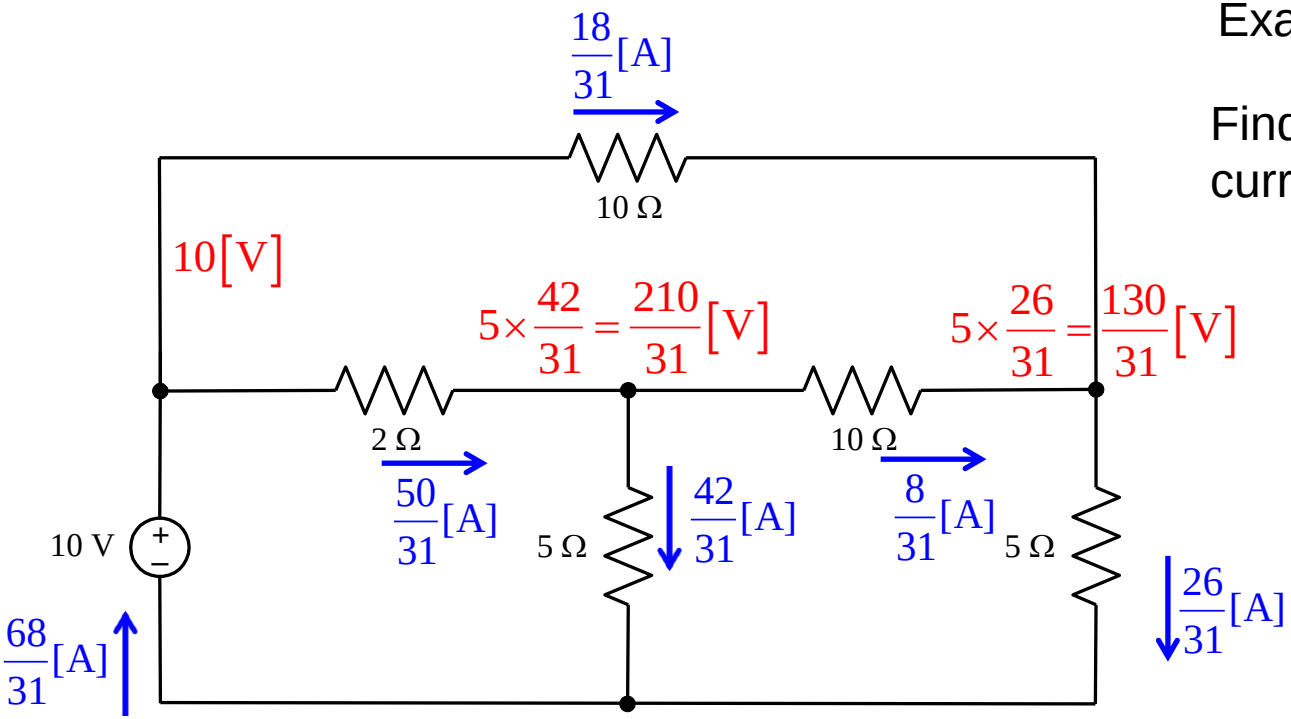

Example 2.

Find node voltages given currents.

MESH ANALYSIS: SUPERMESH

Ch4. III. Circuit Analysis Techniques – Mesh Analysis

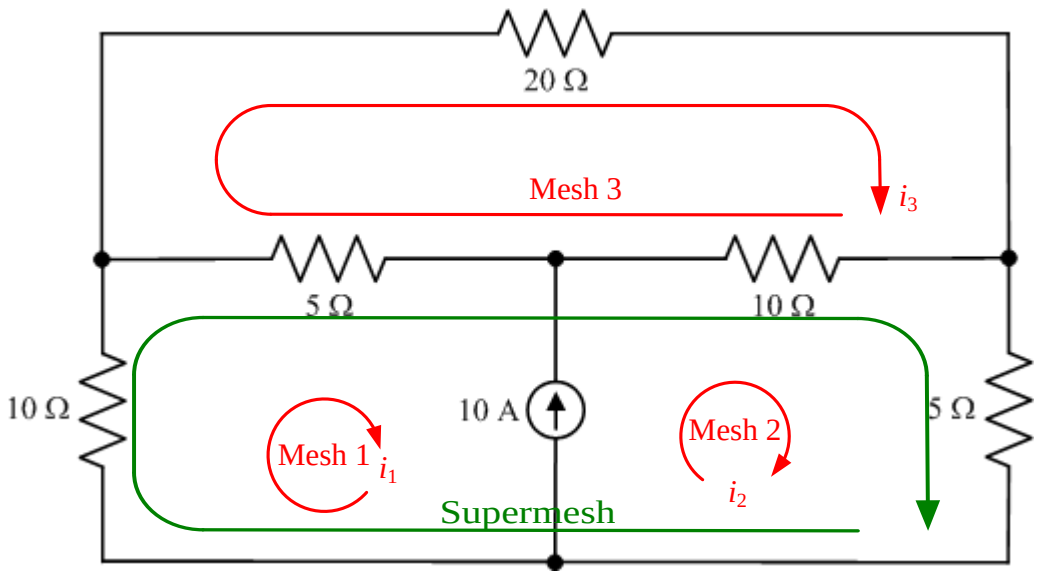

$$i_2 - i_1 = 10$$

Example 3.

We cannot apply KVL across the 10A current source. Thus we cannot write mesh equations for Mesh 1 and Mesh 2.

The solution is to form a supermesh that surrounds the 10A current source.

Next, write an equation relating mesh currents i_1 and i_2 and the 10A current source.

KVL for mesh 3:

$$20i_3 + 10(i_3 - i_2) + 5(i_3 - i_1) = 0$$

KVL for supermesh:

$$10i_1 + 5(i_1 - i_3) + 10(i_2 - i_3) + 5i_2 = 0$$

MESH ANALYSIS: SUPERMESH

Ch4. III. Circuit Analysis Techniques – Mesh Analysis

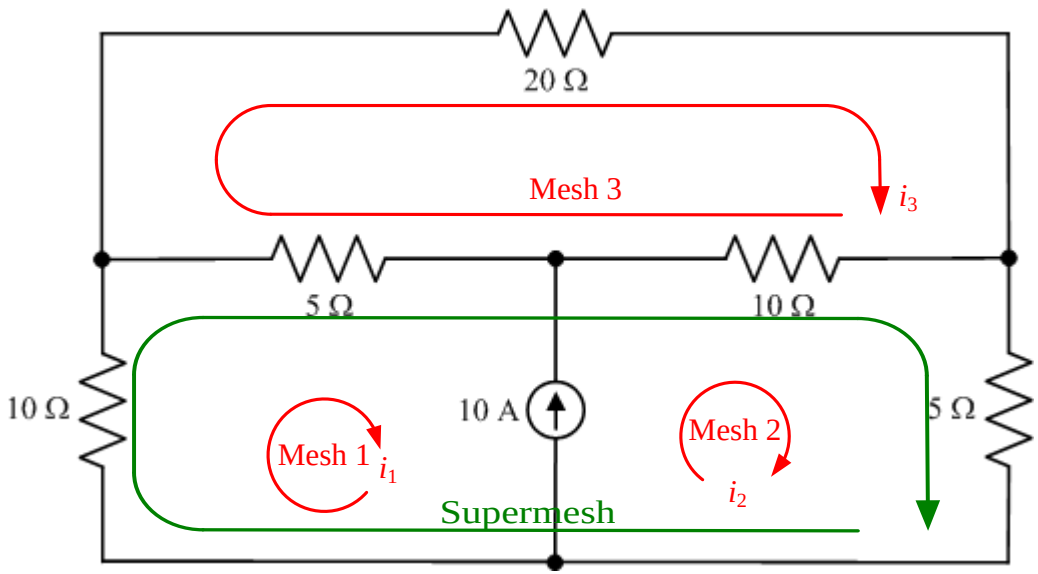

Example 3.

$$i_2 - i_1 = 10$$

KVL for mesh 3:

$$20i_3 + 10(i_3 - i_2) + 5(i_3 - i_1) = 0$$

KVL for supermesh:

$$10i_1 + 5(i_1 - i_3) + 10(i_2 - i_3) + 5i_2 = 0$$

$$-i_1 + i_2 = 10$$
$$-5i_1 - 10i_2 + 35i_3 = 0$$
$$15i_1 + 15i_2 - 15i_3 = 0$$

$$\rightarrow \begin{array}{c} \text{A} \qquad\qquad \text{b} \\ \left[\begin{array}{ccc|c} -1 & 1 & 0 & 10 \\ -5 & -10 & 35 & 0 \\ 15 & 15 & -15 & 0 \end{array}\right] \end{array} \rightarrow \mathbf{A} \backslash \mathbf{b} = \begin{bmatrix} -50/11 \\ 60/11 \\ 10/11 \end{bmatrix} \rightarrow \begin{array}{l} i_1 = -50/11[\text{A}] \\ i_2 = 60/11[\text{A}] \\ i_3 = 10/11[\text{A}] \end{array}$$

MESH ANALYSIS: SUPERMESH

Ch4. III. Circuit Analysis Techniques – Mesh Analysis

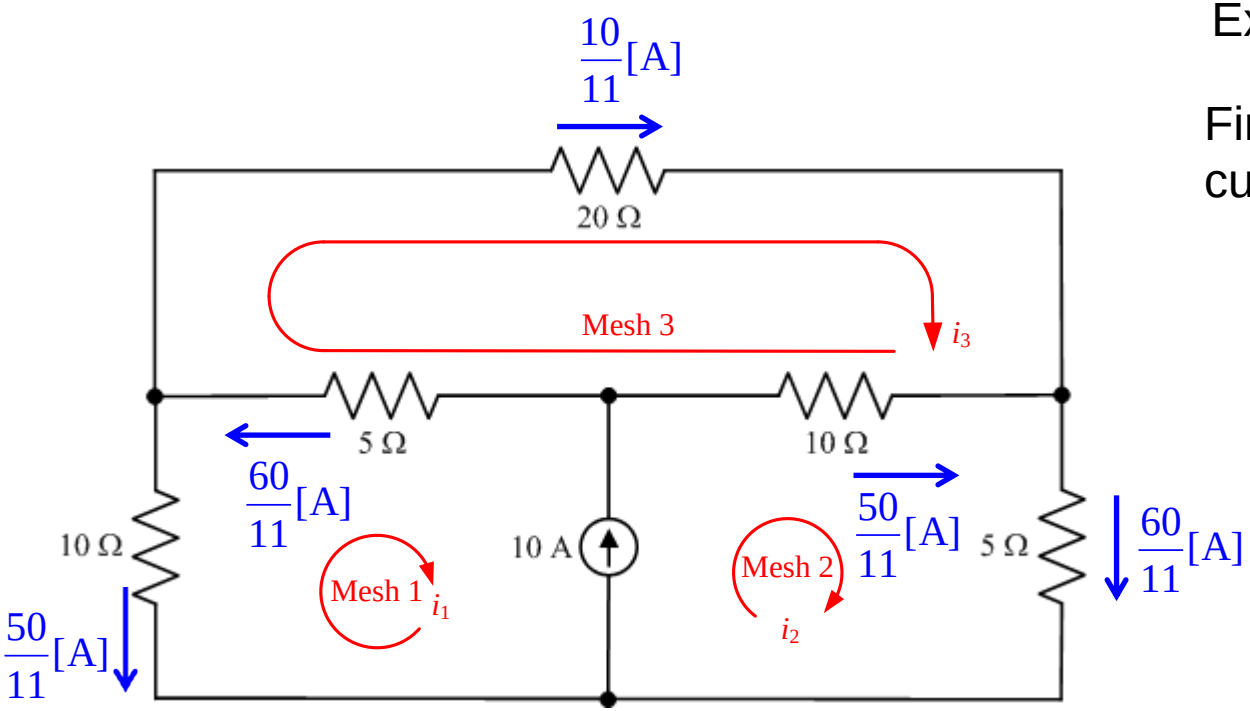

Example 3.

Find currents given mesh currents.

$$i_1 = -50/11[\mathrm{A}]$$
$$i_2 = 60/11[\mathrm{A}]$$
$$i_3 = 10/11[\mathrm{A}]$$

MESH ANALYSIS: SUPERMESH

Ch4. III. Circuit Analysis Techniques – Mesh Analysis

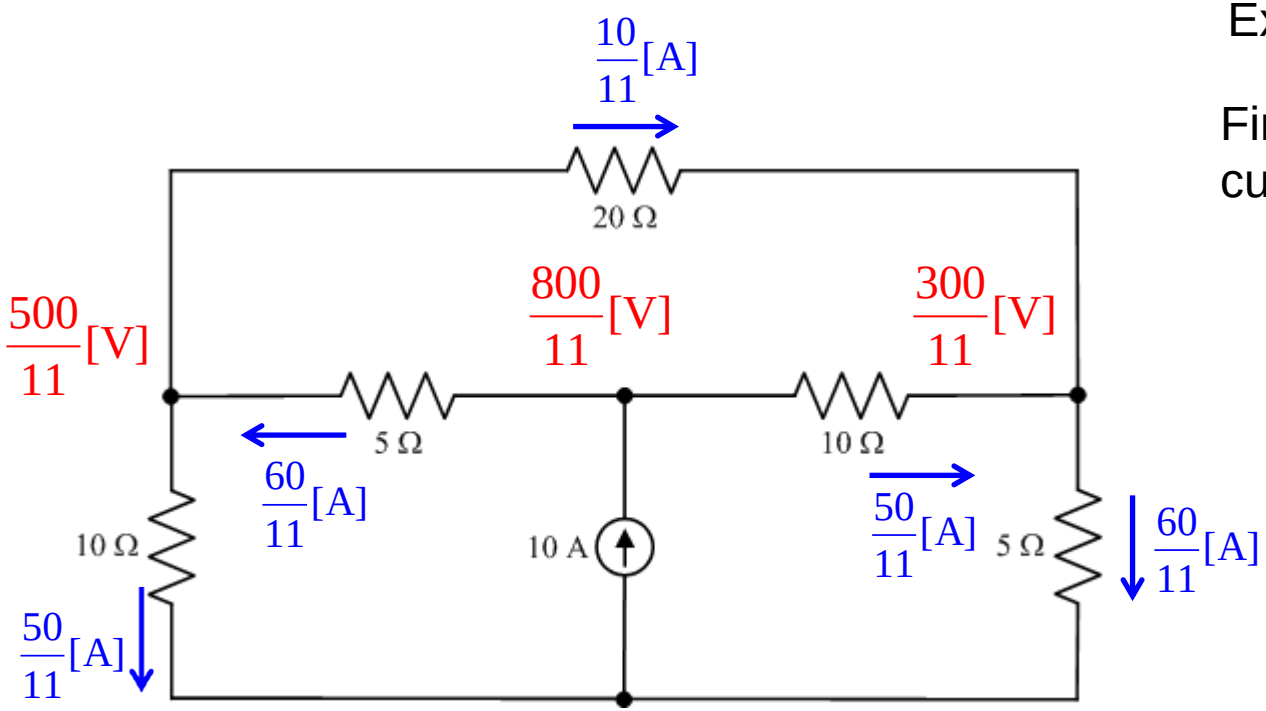

Example 3.

Find node voltages given currents.

MESH ANALYSIS: SUPERMESH

Ch4. III. Circuit Analysis Techniques – Mesh Analysis

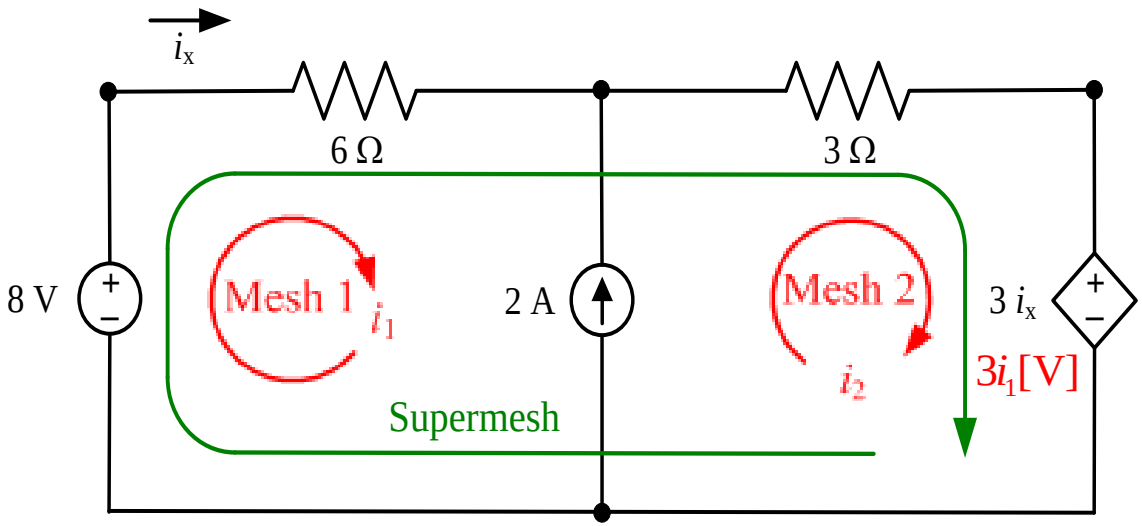

Example 4.

The dependent source must be expressed in terms of mesh currents.

Create a supermesh because of the 2A current source.

Write an equation relating mesh currents i_1 and i_2 in terms of 2A current source.

$$i_2 - i_1 = 2$$

KVL for supermesh:

$$-8 + 6i_1 + 3(i_2) + 3i_1 = 0 \rightarrow -8 + 6i_1 + 3(2 + i_1) + 3i_1 = 0 \rightarrow i_1 = \frac{1}{6}$$

MESH ANALYSIS: MORE EXAMPLES

Ch4. III. Circuit Analysis Techniques – Mesh Analysis

Example 5. Calculate V_0

Trick: Only one mesh equation required for I_3 because other mesh currents are known.

$$\text{Mesh 3: } 4000(I_3+0.002)+2000(I_3-0.004)+6000I_3-3=0$$

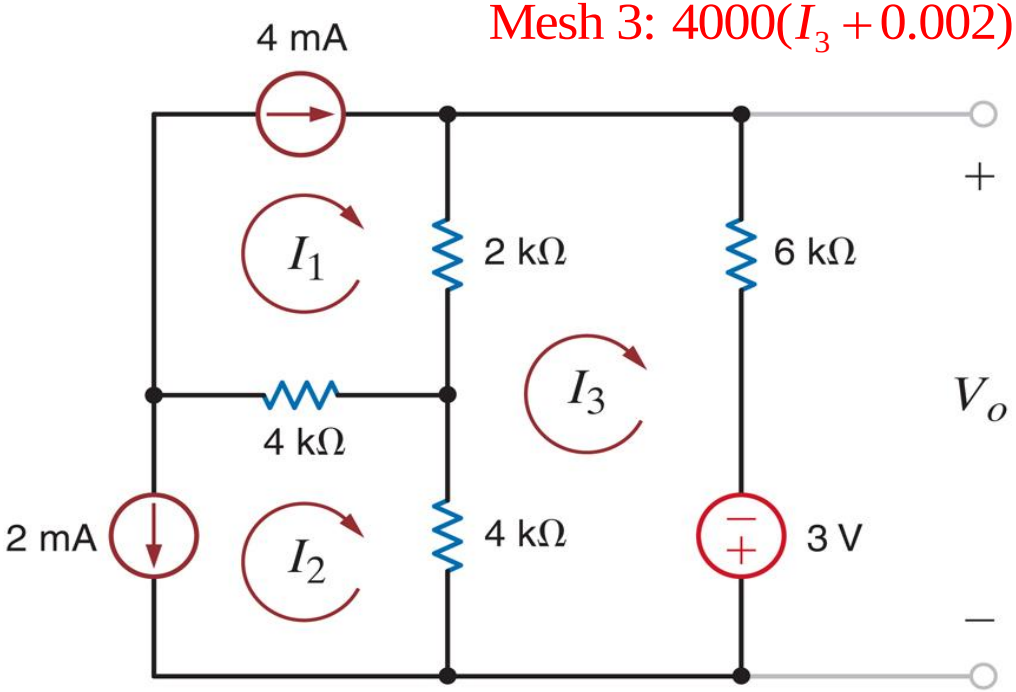

$$12000I_3+8-8-3=0$$

$$I_3=0.25[\text{mA}]$$

$$V_0=-3+0.00025\times 6000=-1.5[\text{V}]$$

MESH ANALYSIS: MORE EXAMPLES

Ch4. III. Circuit Analysis Techniques – Mesh Analysis

Example 5. Calculate V_0

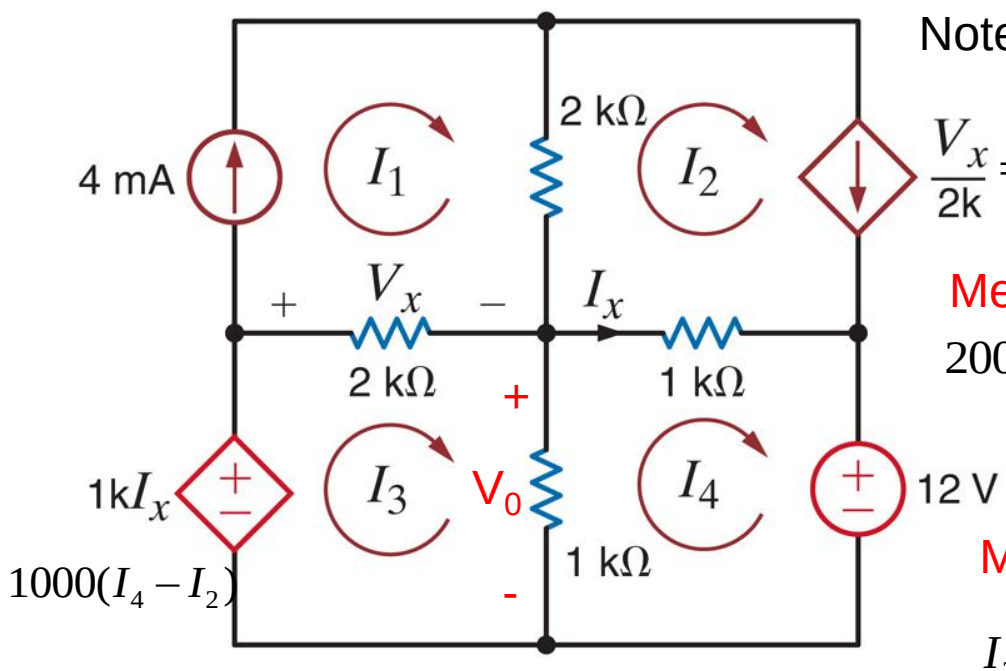

Express dependent sources in terms of mesh currents.

Note I_2 set by dependent source.

Mesh Equations

Mesh I_2 $\quad I_2 = I_3 - 0.004$

Mesh I_3

$$2000(I_3 - 0.004) + 1000(I_3 - I_4) - 1000(I_4 - I_2) = 0$$

Mesh I_4 $\quad 1000(I_4 - I_3) + 1000(I_4 - I_2) + 12 = 0$

$$I_2 - I_3 = -0.004$$

$$-1000I_2 - 1000I_3 + 2000I_4 = -12$$

$$1000I_2 + 3000I_3 - 2000I_4 = 8$$

MESH ANALYSIS: MORE EXAMPLES

Ch4. III. Circuit Analysis Techniques – Mesh Analysis

Example 5. Calculate V_0

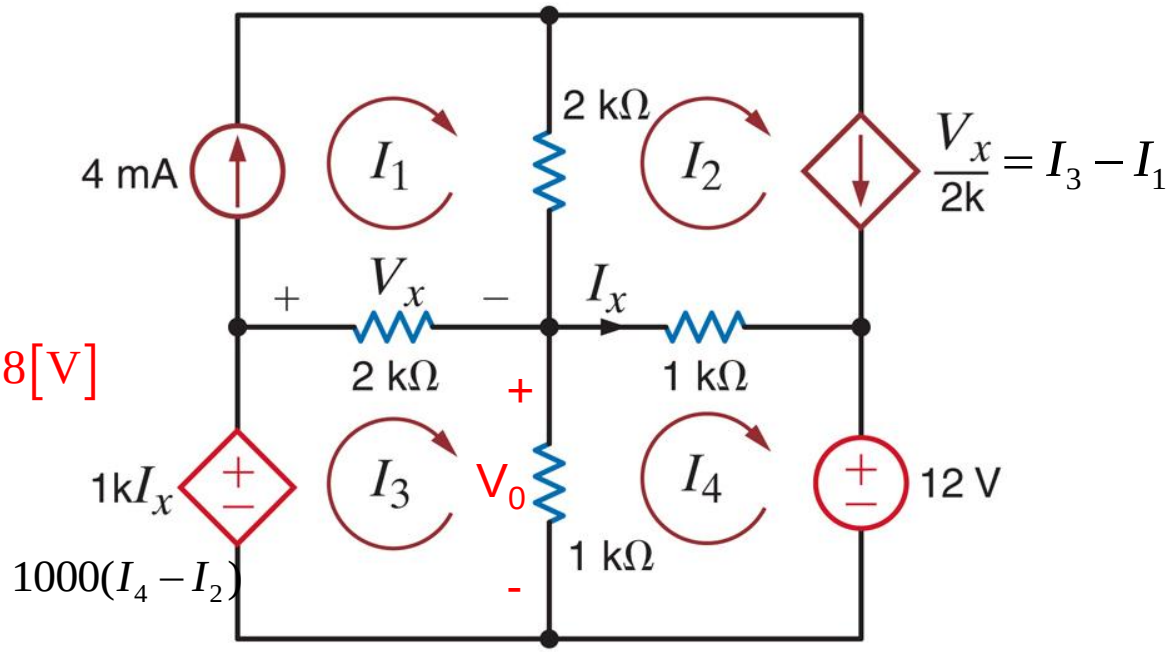

$$V_0 = (I_3 - I_4)1000$$

$$V_0 = (-0.002 - -0.01)1000 = 8[\mathrm{V}]$$

A \ b

$$I_2 - I_3 = -0.004$$
$$-1000I_2 - 1000I_3 + 2000I_4 = -12$$
$$1000I_2 + 3000I_3 - 2000I_4 = 8$$

$$\rightarrow \left[\begin{array}{ccc|c} 1 & -1 & 0 & -0.004 \\ -1 & -1 & 2 & -0.012 \\ 1 & 3 & -2 & 0.008 \end{array}\right] \rightarrow \mathbf{A} \backslash \mathbf{b} = \begin{bmatrix} -0.006 \\ -0.002 \\ -0.01 \end{bmatrix} \rightarrow \begin{array}{l} I_2 = -6[\mathrm{mA}] \\ I_3 = -2[\mathrm{mA}] \\ I_4 = -10[\mathrm{mA}] \end{array}$$

MESH ANALYSIS: MORE EXAMPLES

Ch4. III. Circuit Analysis Techniques – Mesh Analysis

Example 5. Calculate V_0

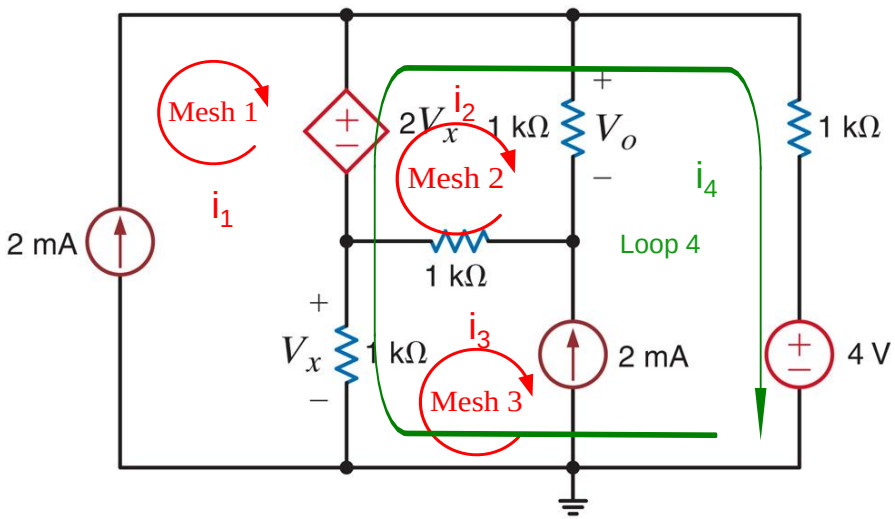

Trick: Choosing the mesh/loop currents carefully can reduce the number of equations.

In this case, we choose Loop 4 which bypasses the troublesome 2mA current source. This gives only two unknowns.

$$i_1 = 2[\text{mA}]$$

$$i_3 = -2[\text{mA}]$$

Express dependent source in terms of mesh currents.

$$2V_x = 2(i_1 - i_3 - i_4)1000$$

$$2V_x = 2000(0.004 - i_4)$$

$$2V_x = 8 - 2000i_4$$

MESH ANALYSIS: MORE EXAMPLES

Ch4. III. Circuit Analysis Techniques – Mesh Analysis

Example 5. Calculate V_0

$$i_1 = 2[\text{mA}] \qquad 2V_x = 8 - 2000i_4$$

$$i_3 = -2[\text{mA}]$$

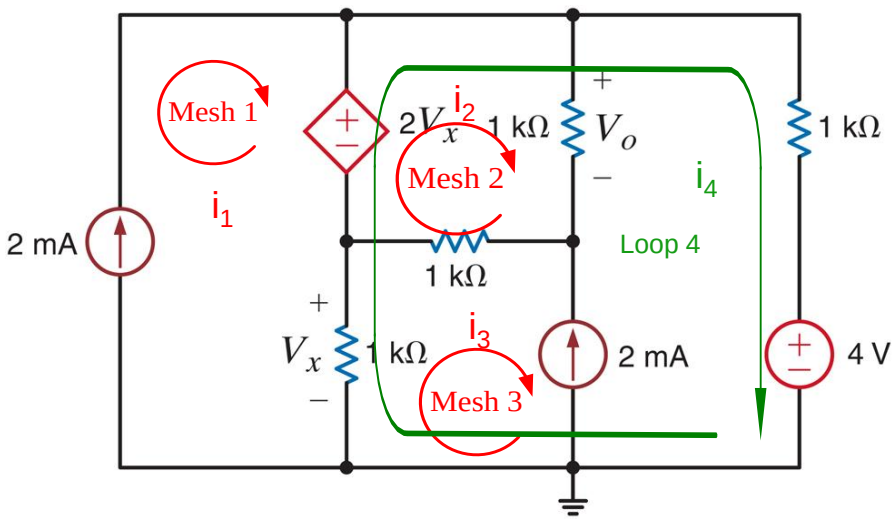

Mesh Equations

Mesh 2:

$$-(8-2000i_4)+1000i_2+(i_2+0.002)1000=0$$

Loop 4:

$$1000i_4+4-(4-1000i_4)-(8-2000i_4)=0$$

$$2000i_2+2000i_4=6 \quad 4000i_4=8 \rightarrow i_2+i_4=0.003 \quad i_4=0.002 \rightarrow i_2=1[\text{mA}] \quad i_4=2[\text{mA}] \rightarrow V_0=1000i_2=1[\text{V}]$$

MESH ANALYSIS VERSUS NODE ANALYSIS

Ch4. IV. Circuit Analysis Techniques – Mesh Analysis versus Node Analysis

Generally, try to choose Node Analysis versus Mesh Analysis depending on which is easier.

For example:

- Circuit contains only current sources: perhaps node-voltage is easier
- Circuit contains only voltage sources: perhaps mesh-current is easier
- Circuit contains fewer nodes than meshes: perhaps node-voltage is easier
- Circuit contains fewer meshes than nodes: perhaps mesh current is easier

As well, whether you want to find a current or voltage may determine the method to use. Perhaps when finding a current use mesh-current analysis. Perhaps when finding a voltage use node voltage method.

In reality, node-voltage is probably more widely used in microelectronic circuits. As well, node-voltage method can handle non-planar circuits.

MESH ANALYSIS VERSUS NODE ANALYSIS

Ch4. IV. Circuit Analysis Techniques – Mesh Analysis versus Node Analysis

Find power dissipated in 300 ohm resistor.

Which method to use: Nodal or Mesh Analysis ?

Nodal analysis requires two equations and Mesh analysis requires five. Use nodal analysis.

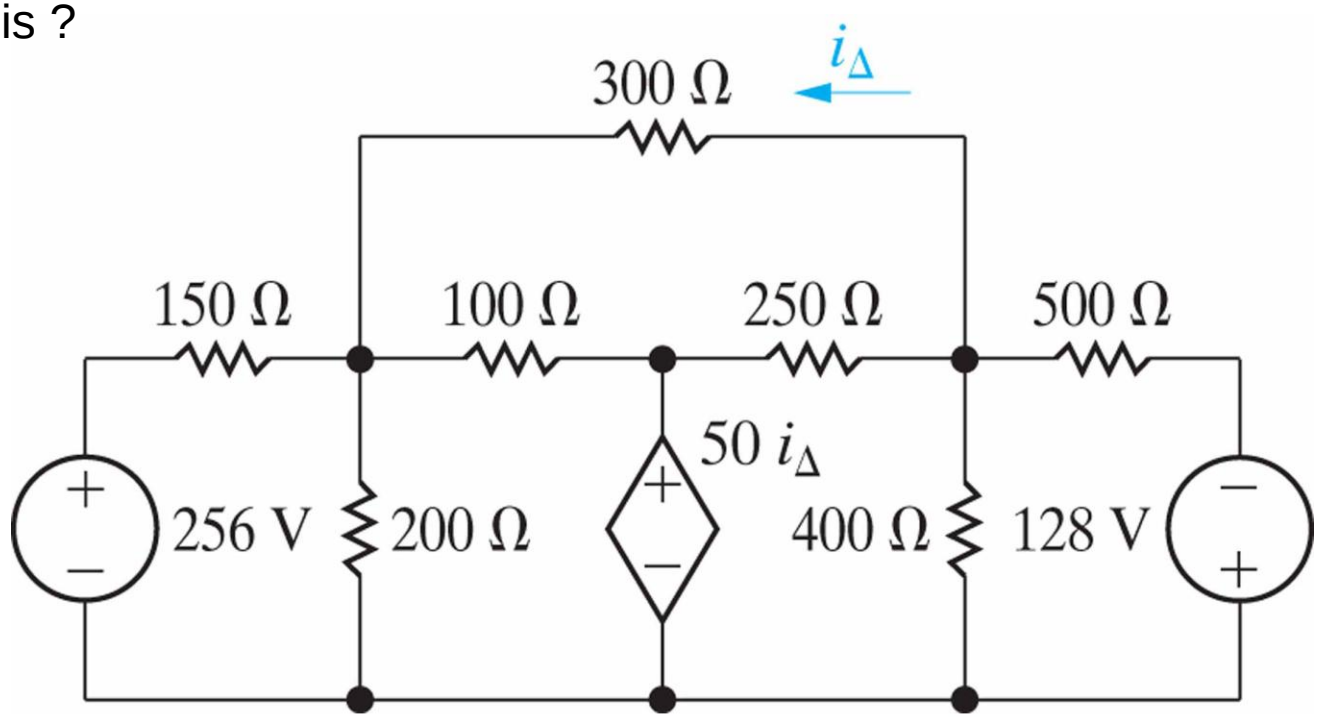

MESH ANALYSIS VERSUS NODE ANALYSIS

Ch4. IV. Circuit Analysis Techniques – Mesh Analysis versus Node Analysis

Find the voltage v_0.

Which method to use: Nodal or Mesh Analysis ?

Both methods have two constraint equations for the two dependent sources. Nodal analysis requires several nodal equations, while mesh analysis only requires one supermesh equation. Use mesh analysis.

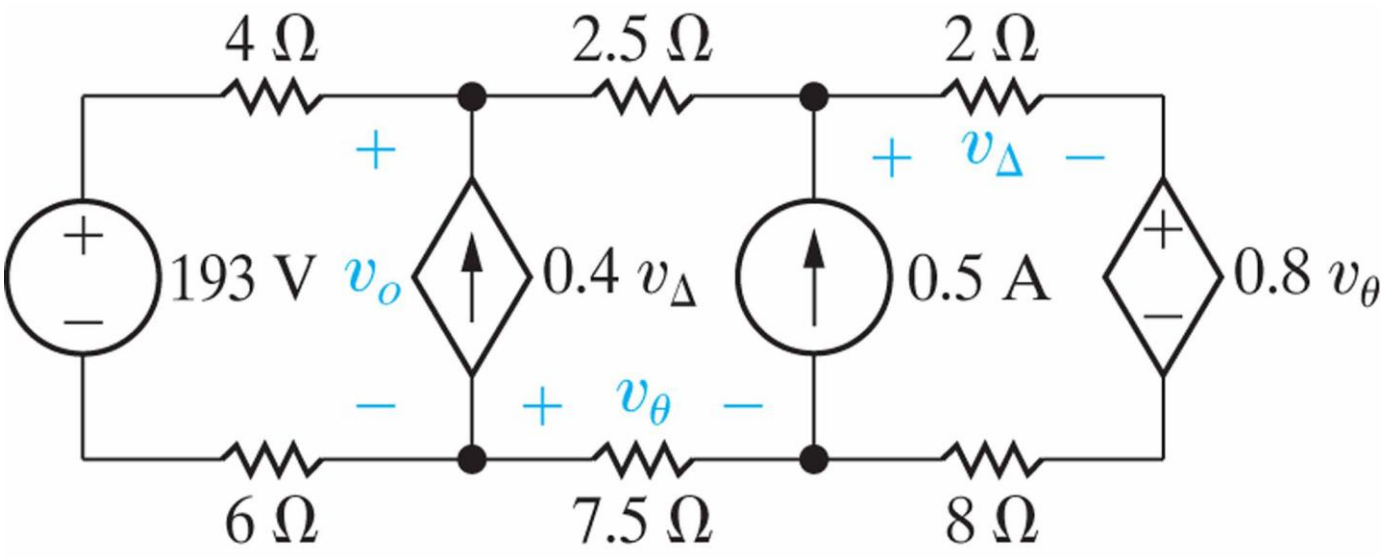

ADDITIONAL CIRCUIT CONCEPTS

Ch4. V. Circuit Analysis Techniques – Additional Concepts & Techniques

› The next slides introduce concepts that are fundamental throughout engineering and science:

- We will introduce the concept of Linearity which has the properties of additivity and homogeneity.
- We will introduce the concept of superposition in linear systems

LINEARITY

Ch4. VI. Linearity

› Linearity:

A (circuit) model described by $y = Tu$ is linear if and only if

$$T(\alpha_1 u_1 + \alpha_2 u_2) = \alpha_1 T u_1 + \alpha_2 T u_2$$

for all possible input pairs u_1, u_2

and all possible scalars α_1, α_2 .

$$\overset{T}{\begin{bmatrix} 7 & -5 & -2 \\ -5 & 20 & -10 \\ -2 & -10 & 22 \end{bmatrix}} \overset{u}{\begin{bmatrix} i_1 \\ i_2 \\ i_3 \end{bmatrix}} = \overset{y}{\begin{bmatrix} 10 \\ 0 \\ 0 \end{bmatrix}}$$

You can think of linearity as meaning that the operation of addition or multiplication in the input to the system influences the output of the system in a similar manner.

We sometimes refer to the linearity requirement as a superposition requirement. In other words, people will say that linearity means that superposition holds. What they mean, is exactly the mathematical definition given above.

LINEARITY

Ch4. VI. Linearity

› Linearity:

Sometimes, it is convenient to break the requirements for linearity into two parts:

A (circuit) model described by $y = Tu$ is linear if and only if

1. $T(u_1 + u_2) = Tu_1 + Tu_2$, $\forall u_1, u_2$ additivity
2. $T(\alpha u) = \alpha Tu$, $\forall \alpha, \forall u$ homogeneity

Linearity can never be verified absolutely empirically on a system, but it could be disproved by a single counter example. However, mathematically it can be verified for the models that we use.

LINEARITY

Ch4. VI. Linearity

› Linearity:

Using nodal analysis for resistive circuits one obtains models that have the form:

$$\mathbf{Av} = \mathbf{Bs}$$

Using mesh analysis for resistive circuits one obtains models that have the form:

$$\mathbf{Ai} = \mathbf{Cs}$$

where **s** is a vector of values for independent sources.

Thus, we have that the voltages or currents are *linearly* dependent on the values of the independent sources.

Ch4. VI. Linearity: homogeneity

› Using homogeneity in a circuit analysis:

Scaling the input results in the same scaling for the output and vice versa scaling the output means the same scaling is required for the input. Let's apply homogeneity in a circuit problem:

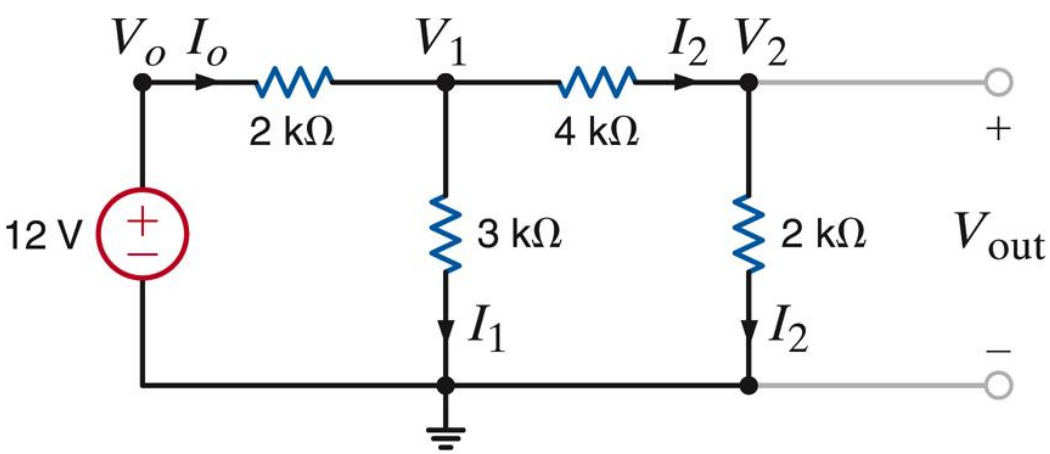

Work the circuit backward:

Assume V_{out} is 1 V.

Then reverse the voltage divider circuit to obtain:

$$V_1 = \frac{6}{2} V_{out} = 3[\mathrm{V}]$$

Thus, I_1 is 1mA, I_2 is 0.5 mA, and I_0 is 1.5 mA.

This means V_0 is V_1 + 1.5 mA x 2 kΩ = 6 V. This is off by a factor of 2.

Thus, scaling using homogeneity tells us that V_{out} is really 2 V because 12 V is twice 6 V.

Ch4. VI. Linearity: homogeneity

› Another example of using homogeneity in a circuit analysis:

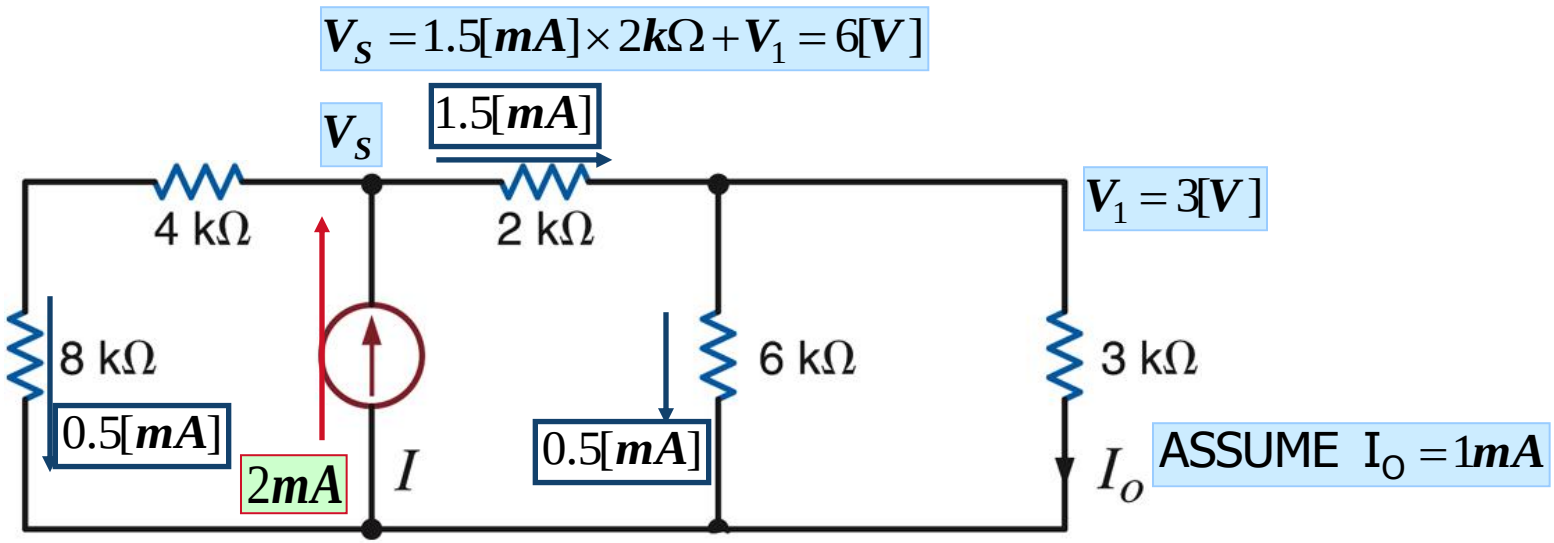

Assuming I_0 is 1mA gives I = 2mA for the source. Suppose you learn the source is actually 6 mA. What is I_0?

Since 6 mA is three times 2 mA, I_0 should be 3mA.

SUPERPOSITION

Ch4. VII. Source Superposition

› Source superposition is an application of linearity that is useful when a circuit has only a few sources. This is quite often the case, for example, when analysing simple transistor or amplifier circuits.

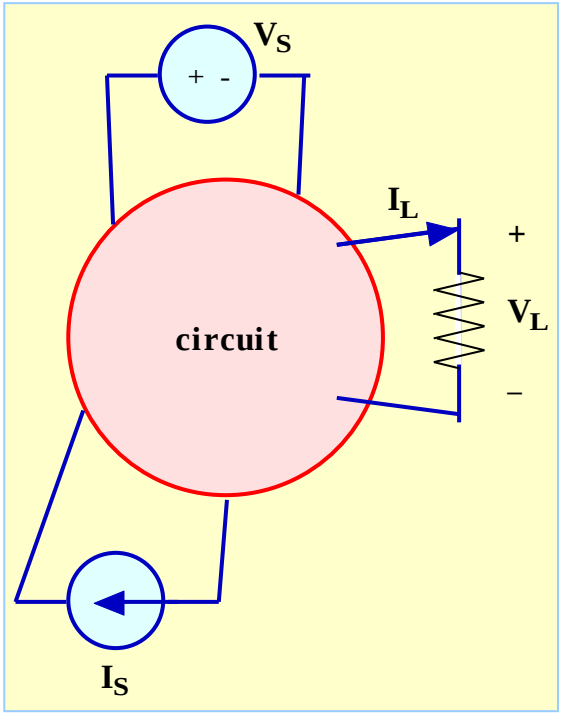

Consider the circuit shown to the left. Linearity says that

$$V_L = \underbrace{a_1 V_S}_{\text{CONTRIBUTION BY } V_S} + \underbrace{a_2 I_S}_{\text{CONTRIBUTION BY } I_S}$$

V_L^1 V_L^2

SUPERPOSITION

Ch4. VII. Source Superposition

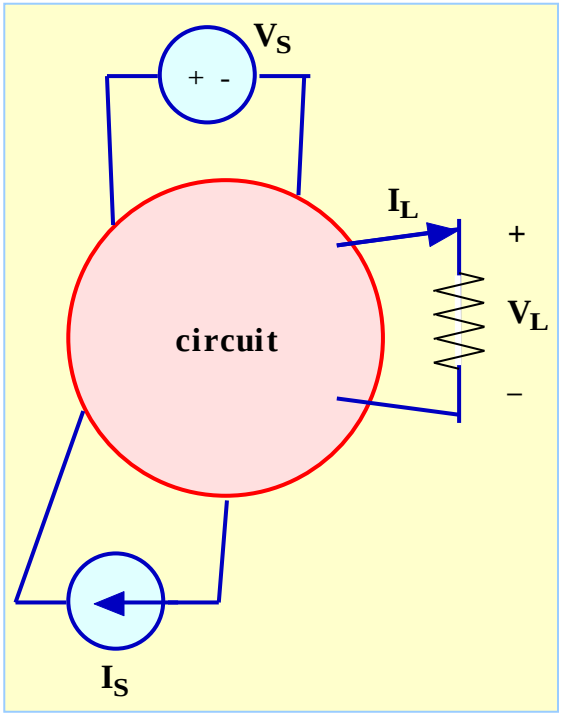

Consider the circuit shown to the left. Linearity says that

$$V_L = a_1 V_S + a_2 I_S$$

CONTRIBUTION BY V_S V_L^1

CONTRIBUTION BY I_S V_L^2

$V^1{}_L$ can be computed by setting the current source to zero and solving the circuit.

$V^2{}_L$ can be computed by setting the voltage source to zero and solving the circuit.

SUPERPOSITION

Ch4. VII. Source Superposition

SOURCE SUPERPOSITION

Circuit with voltage source set to zero (SHORT CIRCUITED)

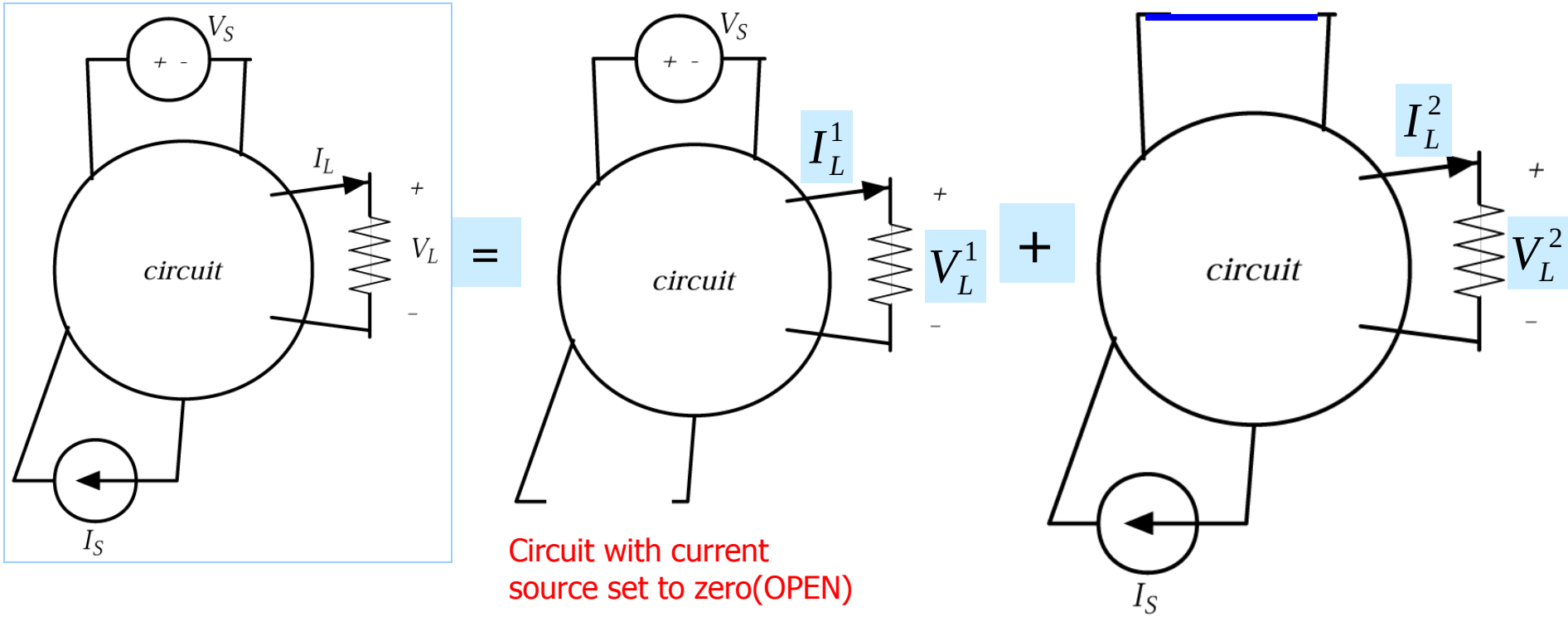

Circuit with current source set to zero(OPEN)

Linearity or the principle of source superposition says: $I_L = I_L^1 + I_L^2 \qquad V_L = V_L^1 + V_L^2$

SUPERPOSITION

Ch4. VII. Source Superposition

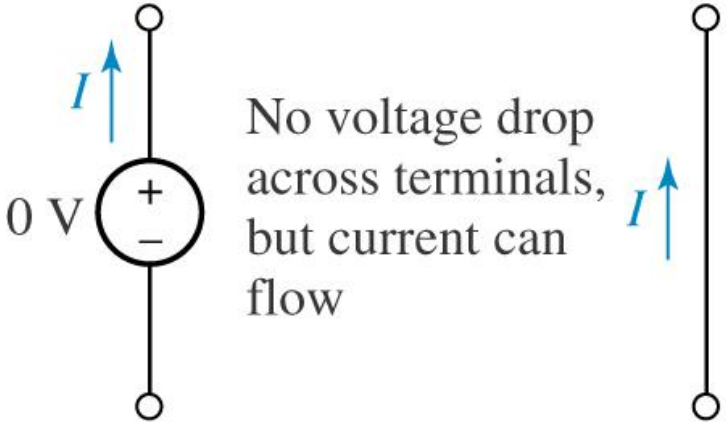

A voltage source set to zero acts like a short circuit.

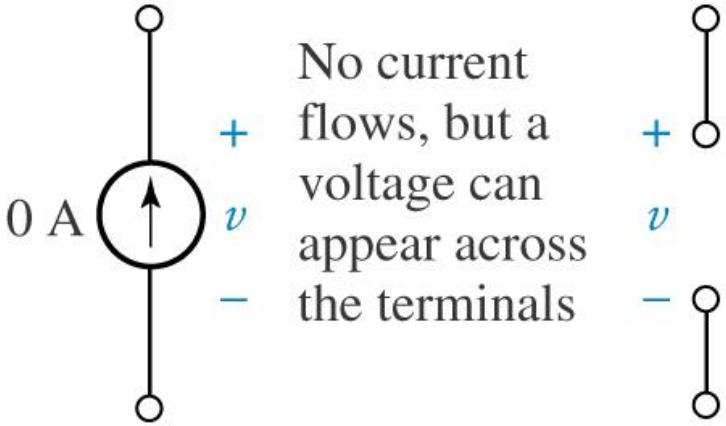

A current source set to zero acts like an open circuit.

Ch4. VII. Source Superposition

WE WISH TO COMPUTE THE CURRENT i_1 INDICATED BY THE BLUE ARROW

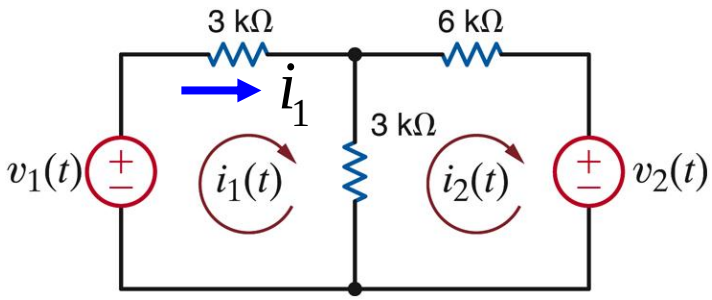

SUPERPOSITION

Ch4. VII. Source Superposition

WE WISH TO COMPUTE THE CURRENT i_1 INDICATED BY THE BLUE ARROW

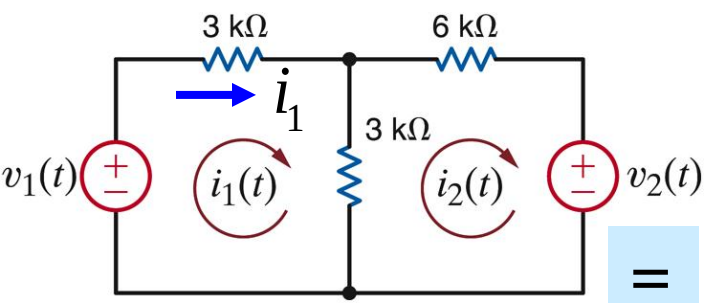

=

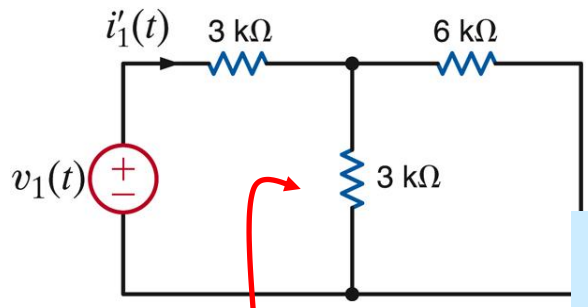

+

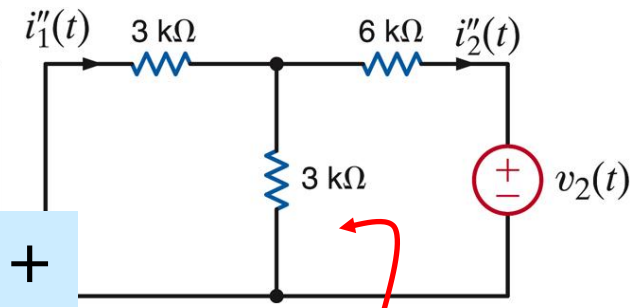

$$\boldsymbol{R_{eq}} = 3 + 3 \| 6\ [\boldsymbol{k}]$$

$$R_{eq} = 6 + (3 \| 3)\ [k]$$

Ch4. VII. Source Superposition

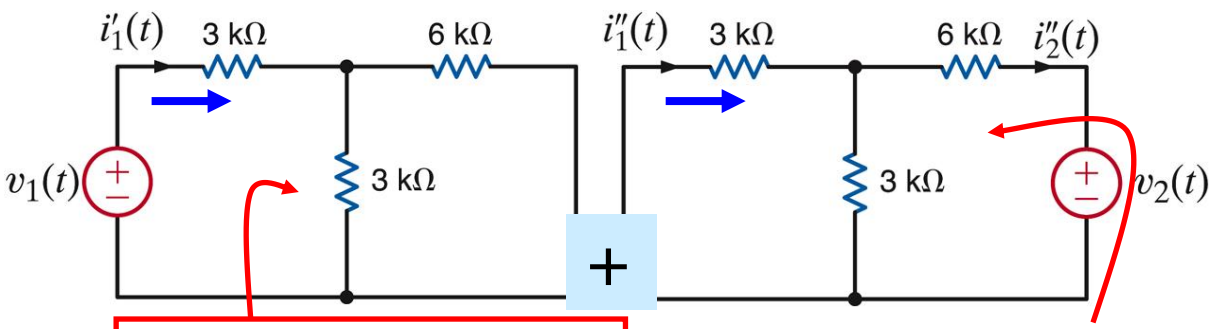

$$\boxed{R_{eq} = 3 + 3 \| 6\ [k]}$$

$$\boxed{R_{eq} = 6 + (3 \| 3)\ [k]}$$

Thus, by superposition we have:

$$i_1 = i_1' + i_1'' = \frac{v_1}{5k} - \frac{v_2}{15k}$$

Contribution of v1

$$i_1'(t) = \frac{v_1(t)}{3k + \frac{(3k)(6k)}{3k + 6k}} = \frac{v_1(t)}{5k}$$

Contribution of v2

$$i_2'' = \frac{-v_2}{R_{eq}} = -\frac{v_2}{7.5k}$$

$$i_1'' = \frac{1}{2} i_2'' = -\frac{v_2}{15k}$$

Ch4. VII. Source Superposition

Compute V_0 using source superposition

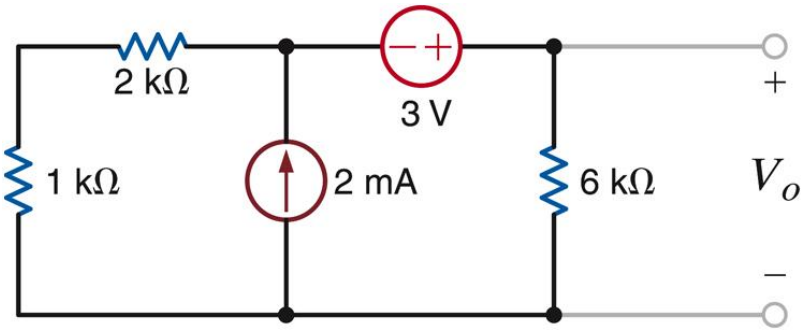

We set to zero the voltage source

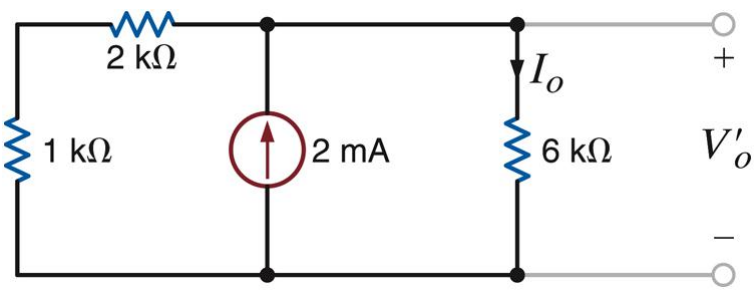

Now we set to zero the current source

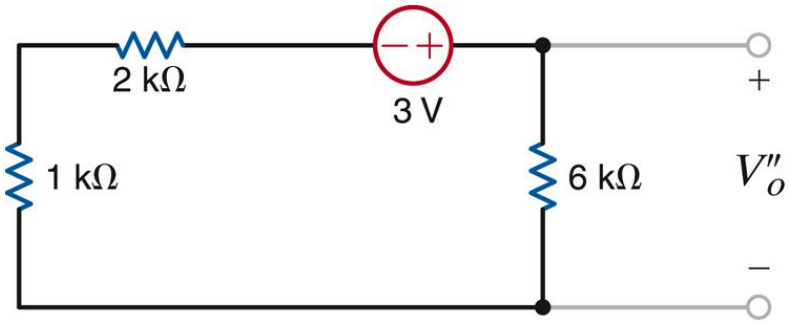

$$V_0 = V_0^{'} + V_0^{''} = ?$$

Ch4. VII. Source Superposition

We set to zero the voltage source

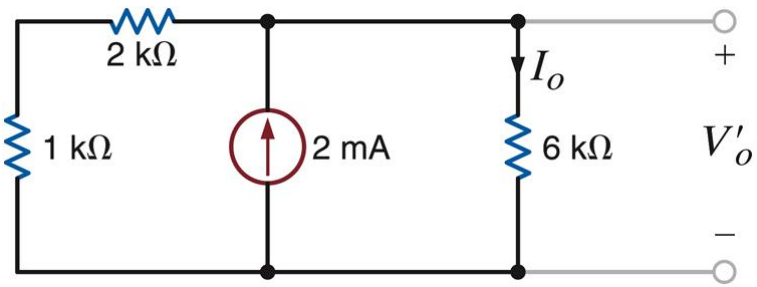

$$I_0 = 2[\text{mA}]\frac{\frac{1}{6}}{\frac{1}{3}+\frac{1}{6}} = \frac{2}{3}[\text{mA}]$$

$$V_0^{'} = \frac{2}{3}[\text{mA}]6[\text{k}\Omega] = 4[\text{V}]$$

Now we set to zero the current source

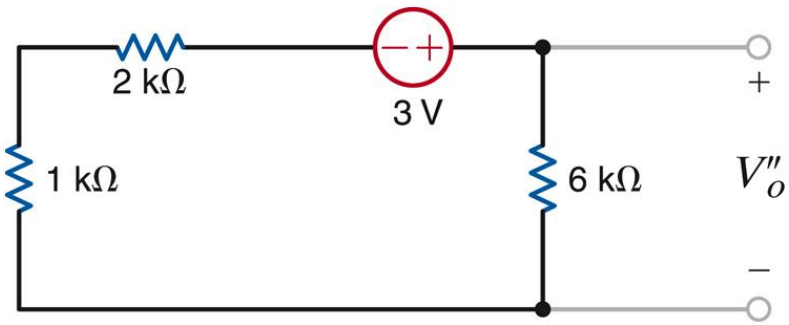

Voltage Divider

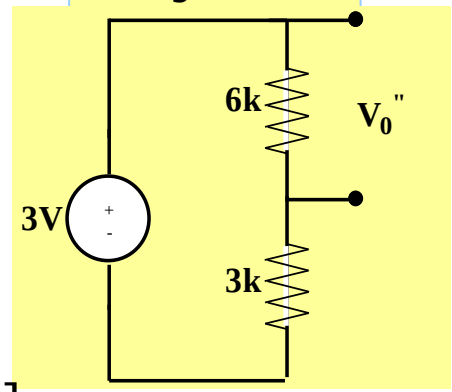

$$V_0^{''} = 3\frac{6}{9} = 2[\text{V}]$$

Ch4. VII. Source Superposition

Compute V_0 using source superposition

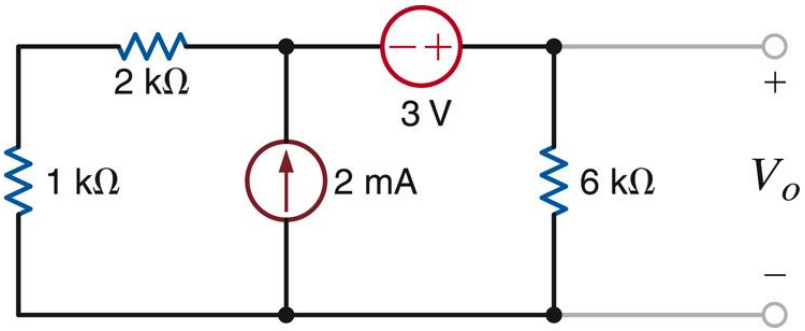

We set to zero the voltage source

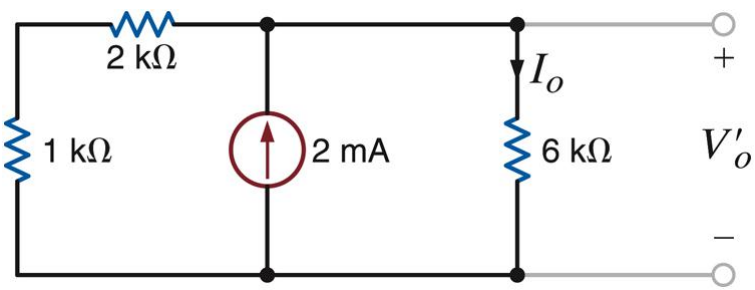

Now we set to zero the current source

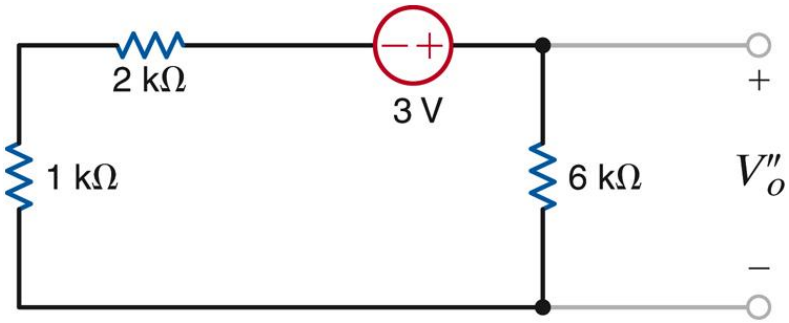

$$V_0 = V_0^{'} + V_0^{''} = 4 + 2 = 6[V]$$

SUPERPOSITION

Ch4. VII. Source Superposition with Dependent Sources

Solve for v_x in the circuit below using source superposition.

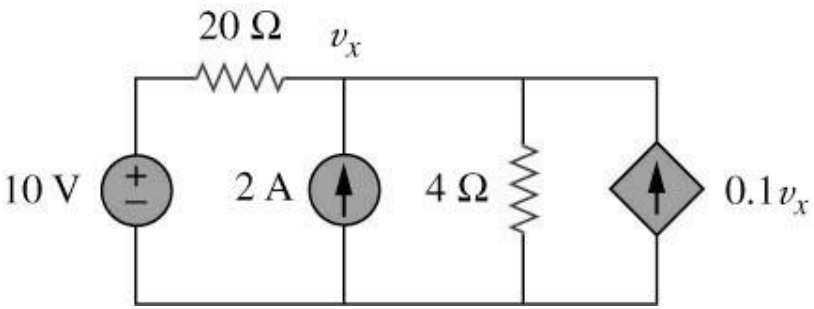

Question: What is v_x due to the 2A current source ?

Answers: (A) 8 (B) 5 (C) 12 (D) 10

SUPERPOSITION

Ch4. VII. Source Superposition with Dependent Sources

Solve for v_x in the circuit below using source superposition.

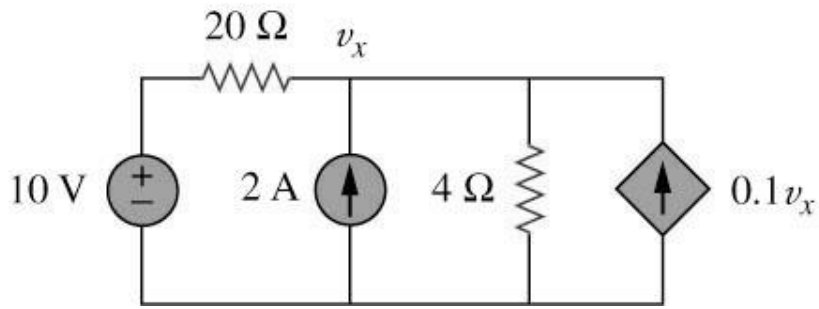

Question: What is v_x due to the 10V voltage source ?

Answers: (A) 3/2 (B) 5/2 (C) 4 (D) 9/2

Ch4. VII. Source Superposition with Dependent Sources

Solve for v_x in the circuit below.

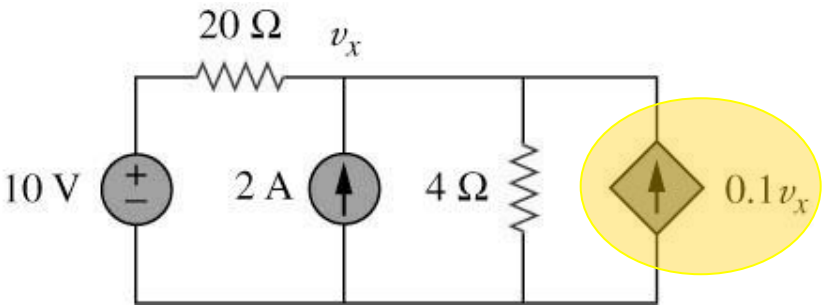

Dependant source keep unchanged

$V_x = v_1 + v_2$

Can practice solving:

v_1=2.5 v_2=10

V_x= 12.5

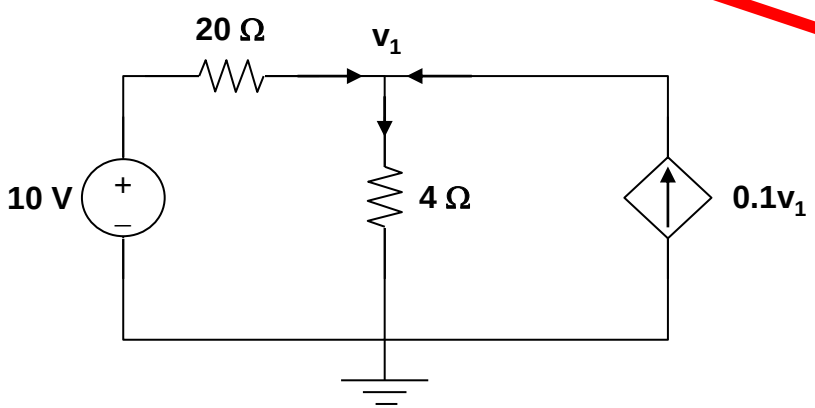

2A is discarded by open-circuit

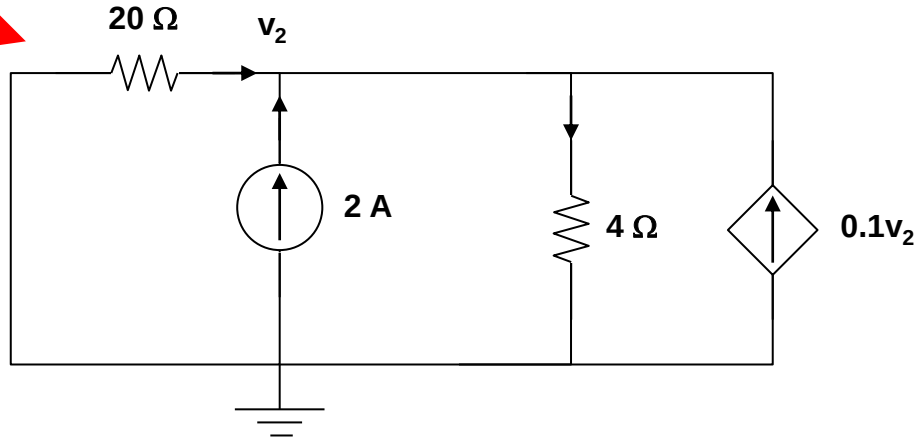

10V is replaced by short-circuit

MULTIPLE SOURCES

Ch4. VIII. Multiple Sources and Linearity

› Multiple Sources

- Voltage sources in series can be algebraically added to form an equivalent source.

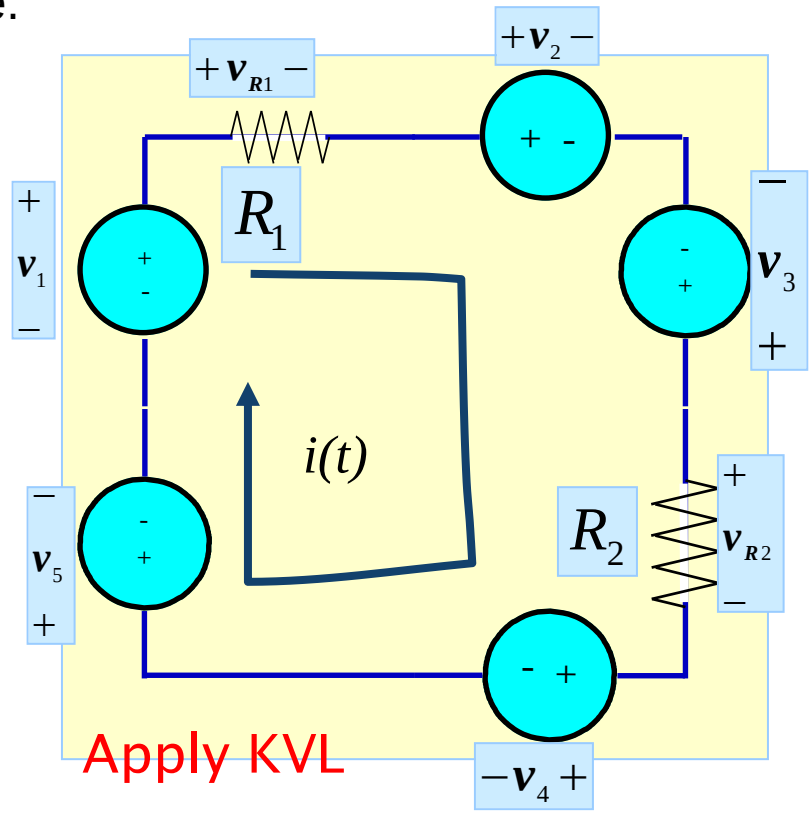

Apply KVL

$$v_{eq} = v_1 - v_2 + v_3 - v_4 - v_5$$

$$v_{eq} = v_{R1} + v_{R2}$$

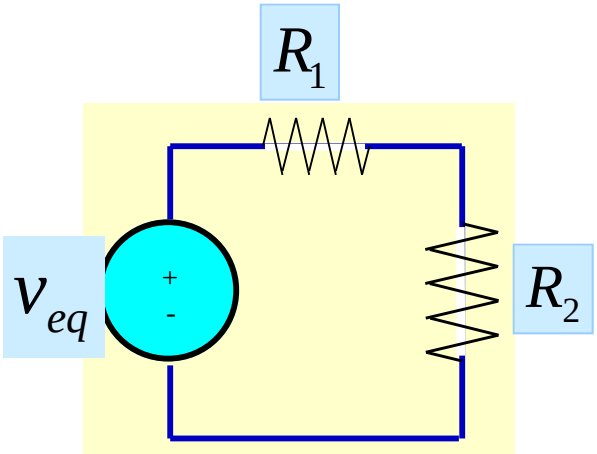

MULTIPLE SOURCES

Ch4. VIII. Multiple Sources and Linearity

› Multiple Sources

- Current sources in parallel can be algebraically added to form an equivalent source.

APPLY KCL TO THIS NODE

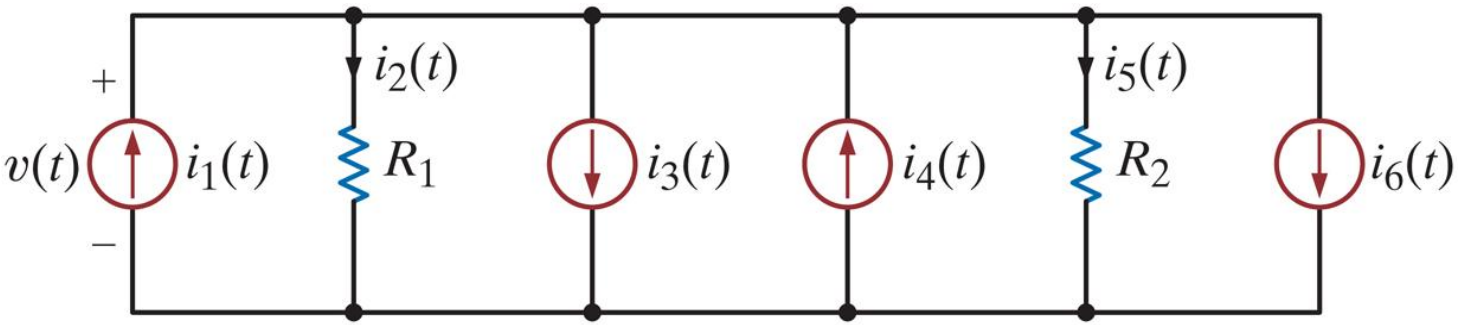

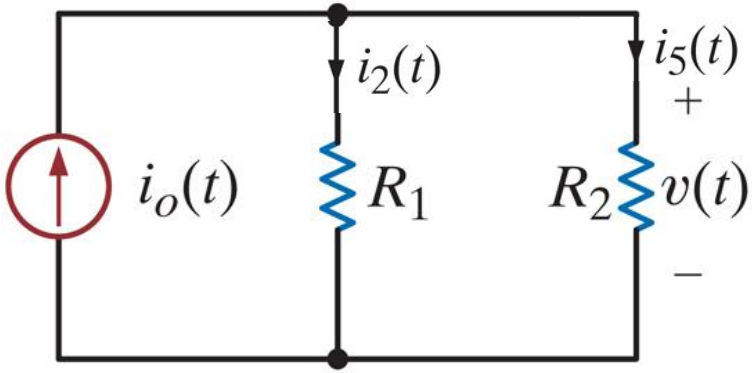

$$i_0(t) = i_1(t) - i_3(t) + i_4(t) - i_6(t)$$

$$i_0(t) = i_2(t) + i_5(t)$$

SOURCE TRANSFORMATIONS

Ch4. IX. Source Transformations using Linearity

› Source Transformations

- Using the principles of linearity, we can apply source transformations.
- Source transformations are frequently used when considering the current, voltage or power of a single element in a circuit.
- A source transformation is the process of replacing a voltage source in series with a resistor by a current source in parallel with a resistor (or vice versa).

In order for the two circuits to be equivalent with respect to terminals 'a' and 'b', we must have:

$$v_s = i_s R$$

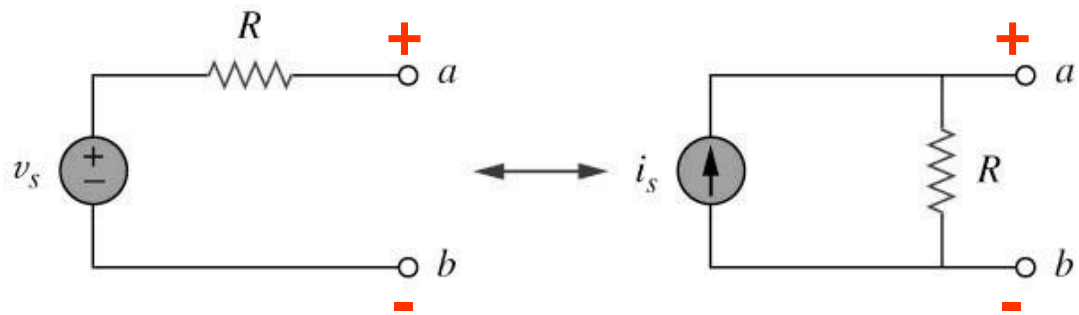

The arrow of the current source is directed toward the positive terminal of the voltage source.

Ch4. IX. Source Transformations using Linearity

› Source Transformations

Find power absorbed by the 6V source using source transformations.

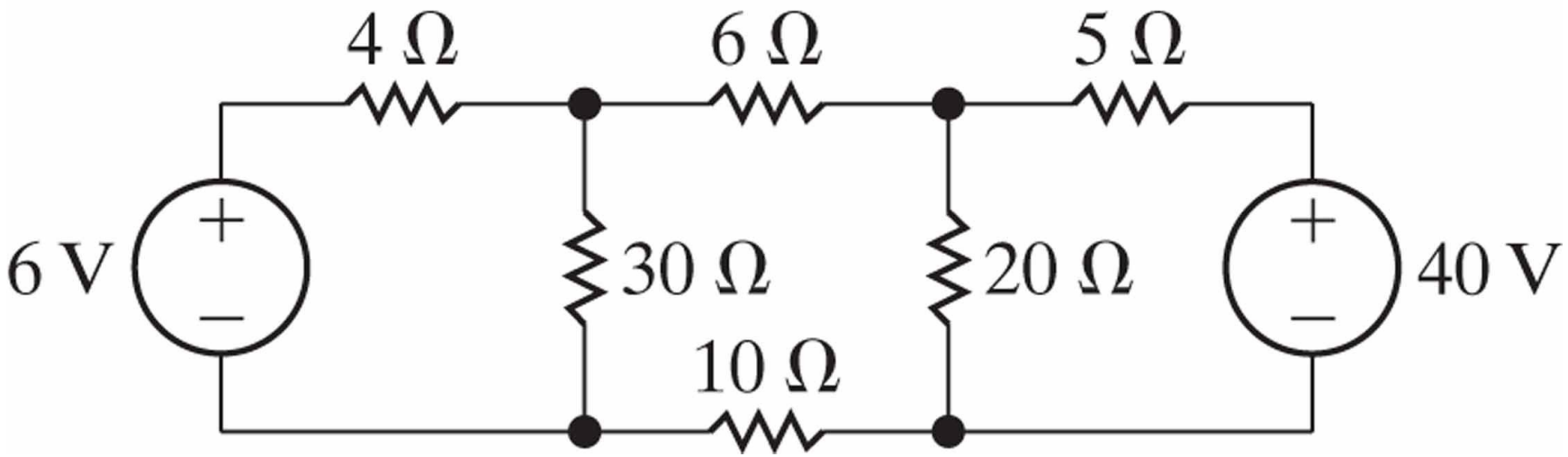

SOURCE TRANSFORMATIONS

Ch4. IX. Source Transformations using Linearity

› Source Transformations

Find power absorbed by the 6V source using source transformations.

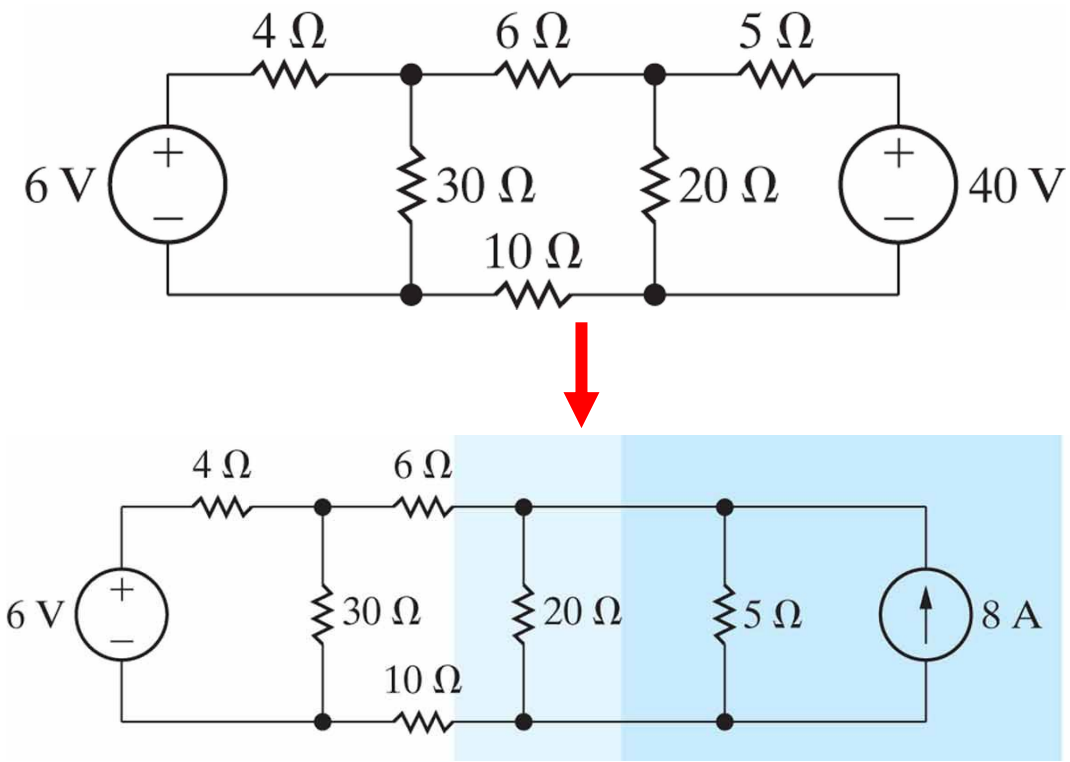

SOURCE TRANSFORMATIONS

Ch4. IX. Source Transformations using Linearity

› Source Transformations

Find power absorbed by the 6V source using source transformations.

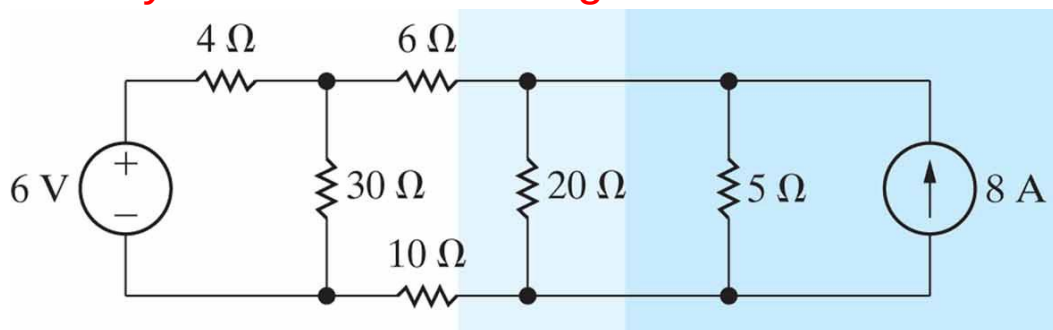

$$5 \| 20 = 4$$

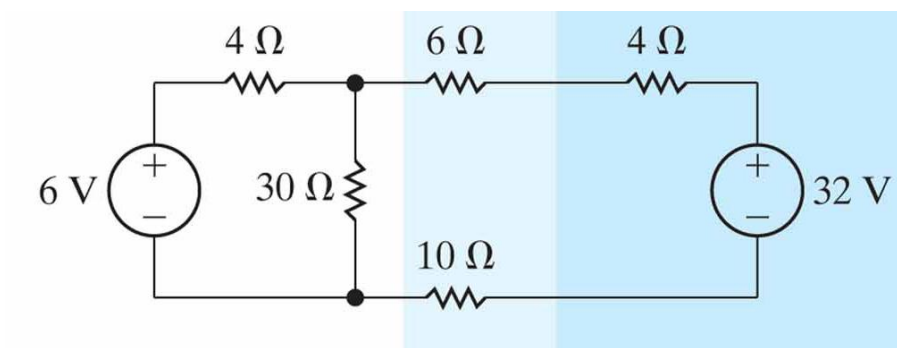

SOURCE TRANSFORMATIONS

Ch4. IX. Source Transformations using Linearity

› Source Transformations

Find power absorbed by the 6V source using source transformations.

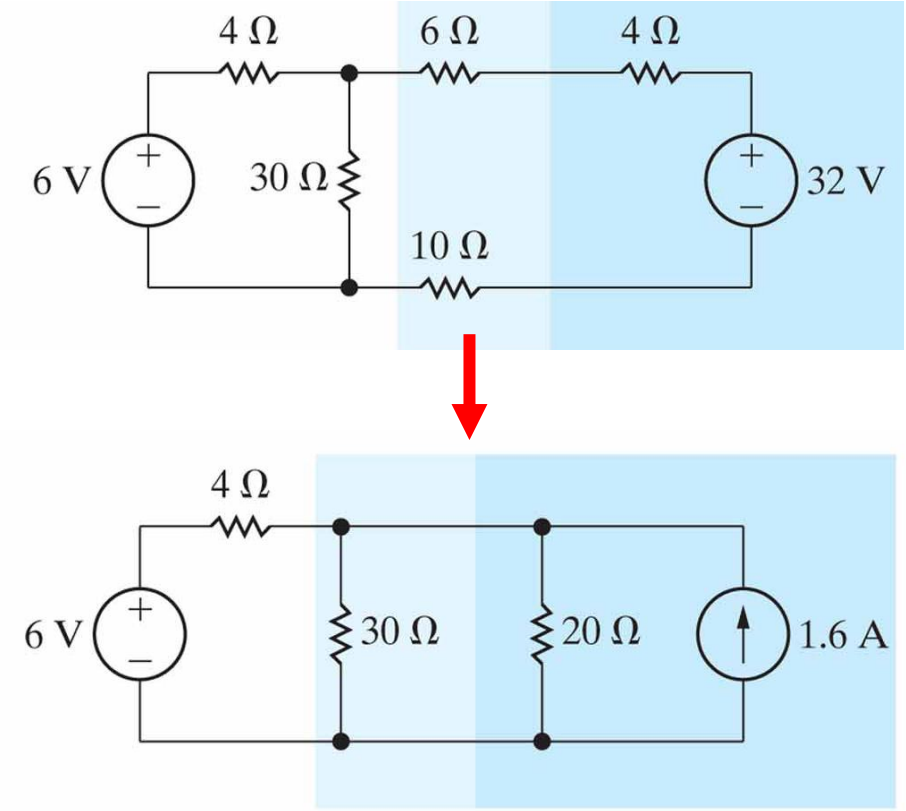

Ch4. IX. Source Transformations using Linearity

› Source Transformations

Find power absorbed by the 6V source using source transformations.

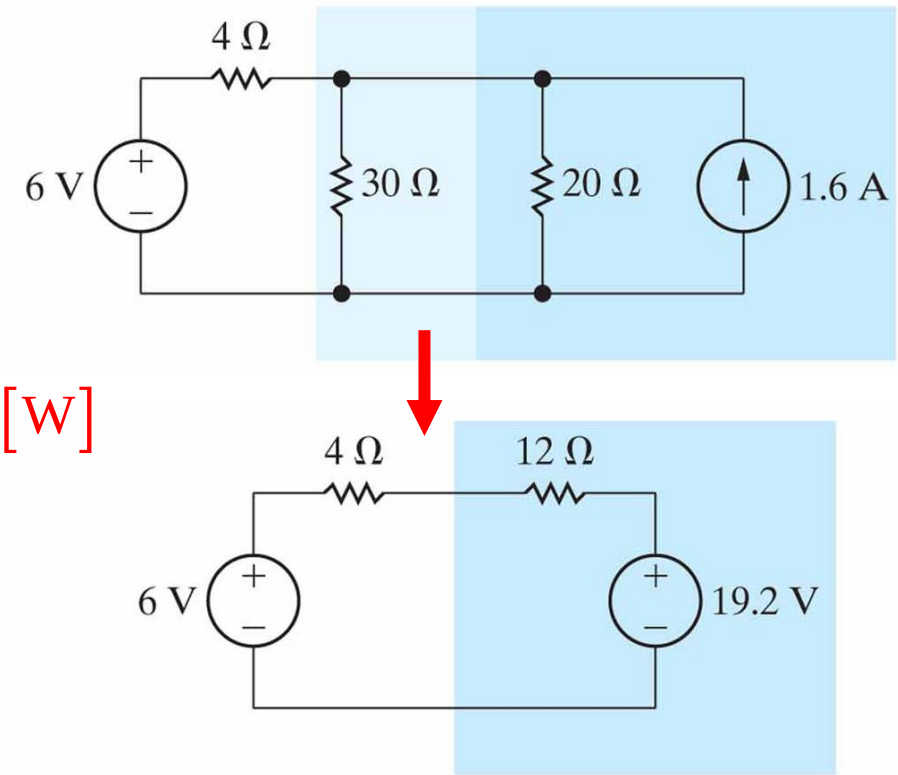

$$30 \parallel 20 = 12$$

$$P_{abs} = \frac{19.2-6}{16} \times 6 = 4.95 \ [W]$$

SOURCE TRANSFORMATIONS

Ch4. IX. Source Transformations using Linearity

› Source Transformations

Use source transformations to find V_0.

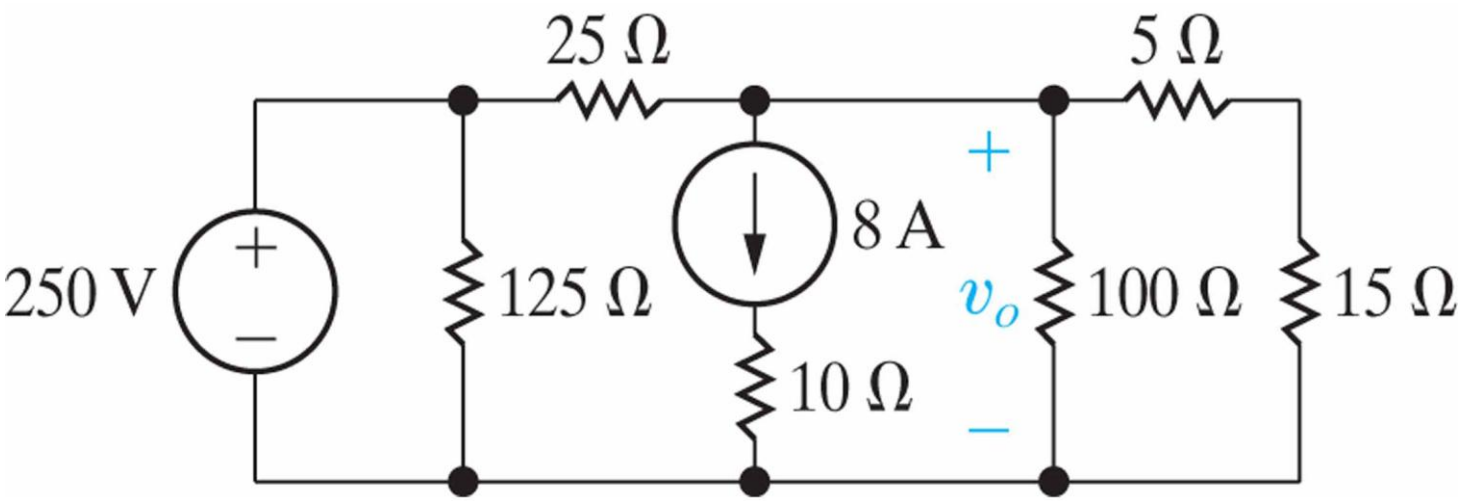

Question: Should we keep (do we need) the 125Ω and 10Ω resistors?

Answers: (A) Yes (B) No

SOURCE TRANSFORMATIONS

Ch4. IX. Source Transformations using Linearity

› Source Transformations

Use source transformations to find V0.

Remove the “extraneous” resistances.

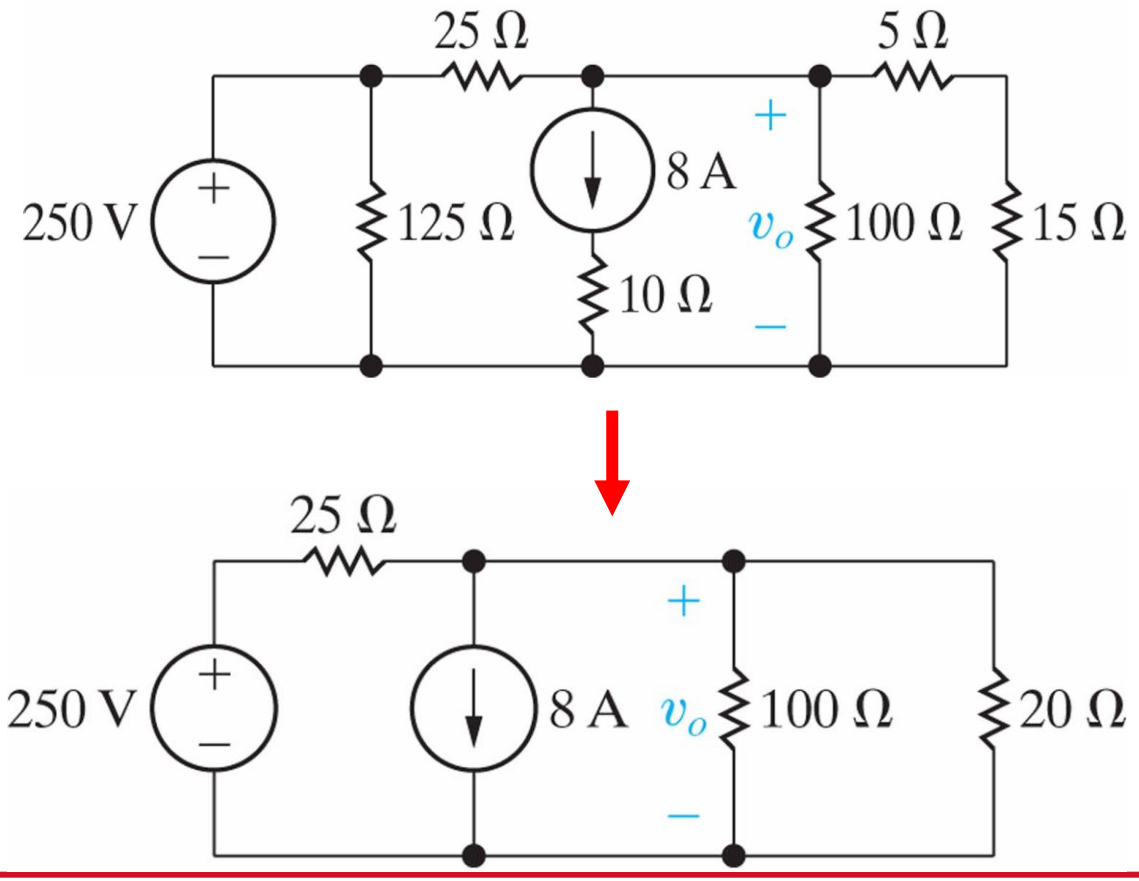

Ch4. IX. Source Transformations using Linearity

› Source Transformations

Use source transformations to find V0.

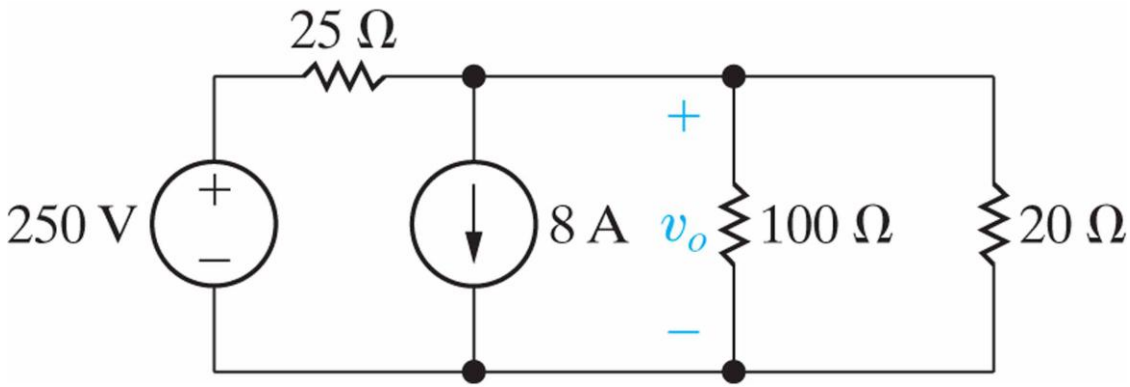

Reduce to a current source in parallel with a resistance. What is the value of the current source and resistance?

Answers: (A) 4A, 20Ω (B) 2A, 20Ω (C) 1A, 5Ω (D) 2A, 10Ω

Ch4. IX. Source Transformations using Linearity

› Source Transformations

Use source transformations to find V0.

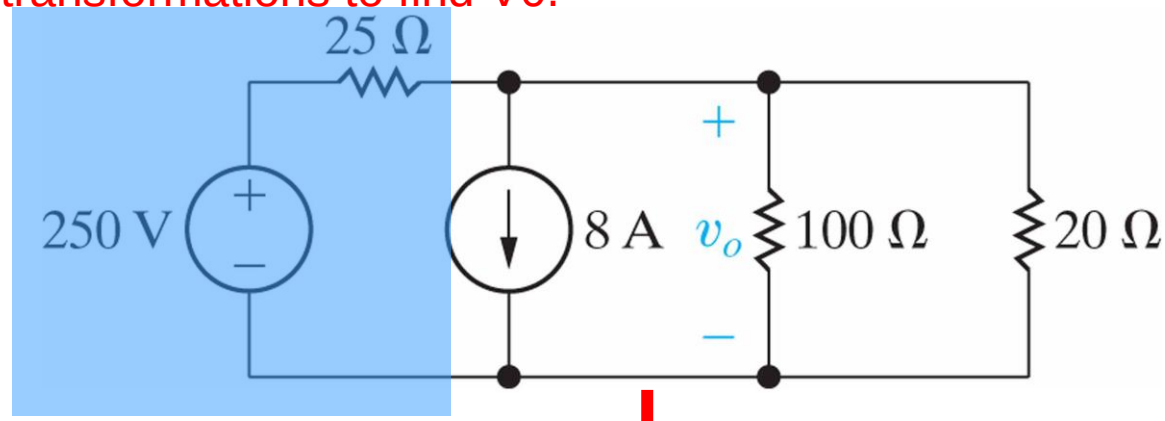

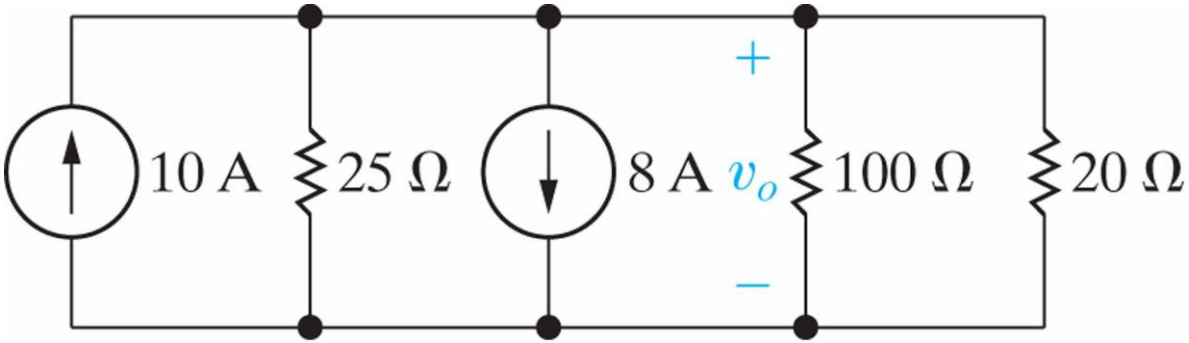

SOURCE TRANSFORMATIONS

Ch4. IX. Source Transformations using Linearity

› Source Transformations

Use source transformations to find V0.

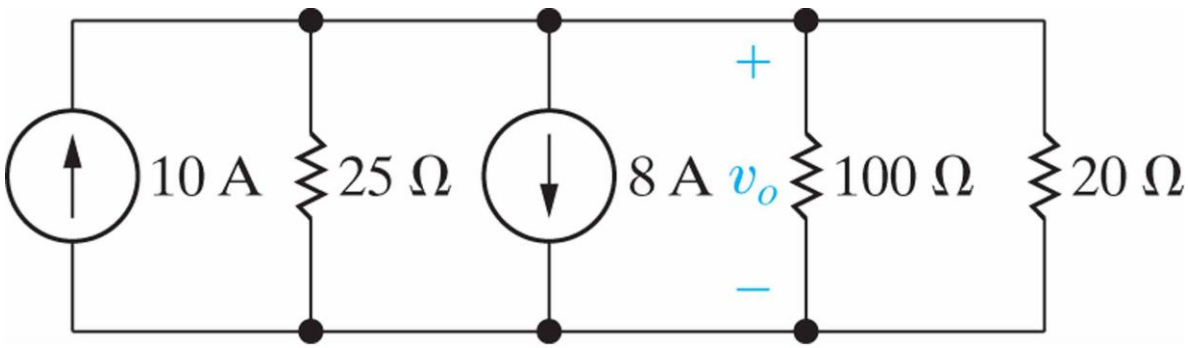

$$100 \parallel 20 \parallel 25 = 10$$

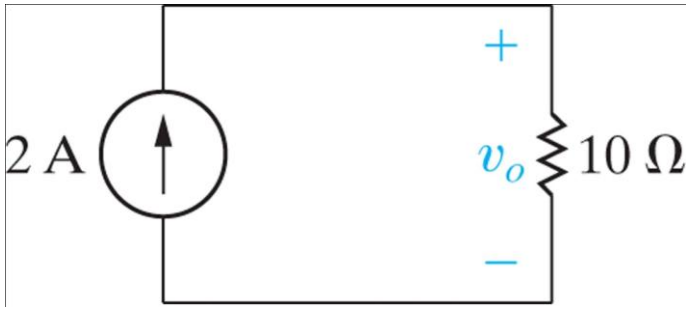

v_o = 2 x 10 = 20 V

Ch4. X. Thevenin and Norton Equivalent Circuits

Thévenin Equivalent Circuit

Any two-terminal circuit containing resistances and sources can be replaced by an equivalent circuit consisting of just an independent voltage source in series with a resistance (without affecting the behaviour of the rest of the circuit).

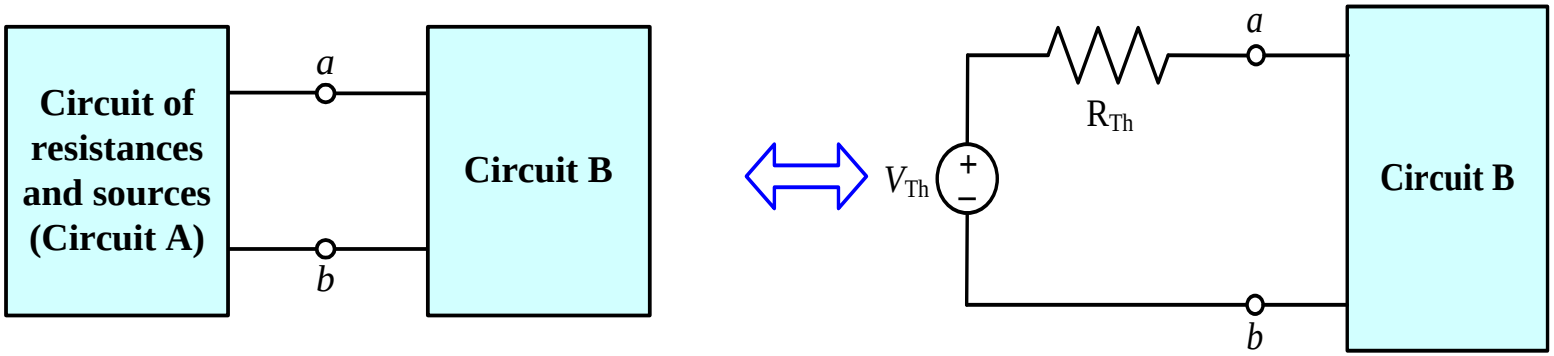

Assumptions:

- This is the only connection between circuits A and B
- If there is a dependent source, then both the dependent source and its controlling variable must be either in circuit A or both parts must be in circuit B (i.e. each dependent source is either totally contained in circuit A or in circuit B)

Ch4. X. Thevenin and Norton Equivalent Circuits

How do we compute the Thévenin equivalent circuit parameters?

Consider open circuit voltage v_{oc} of circuit A

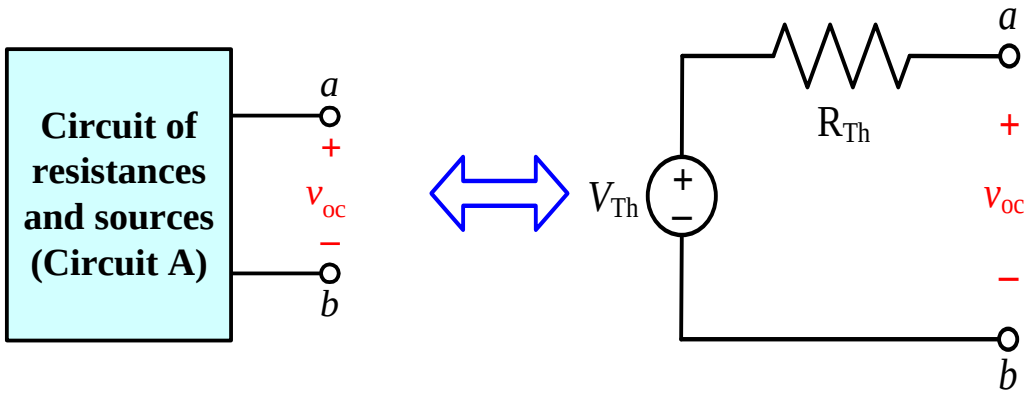

So we must have

$$\boxed{V_{Th} = v_{oc}}$$

Consider short circuit current i_{sc} of circuit A

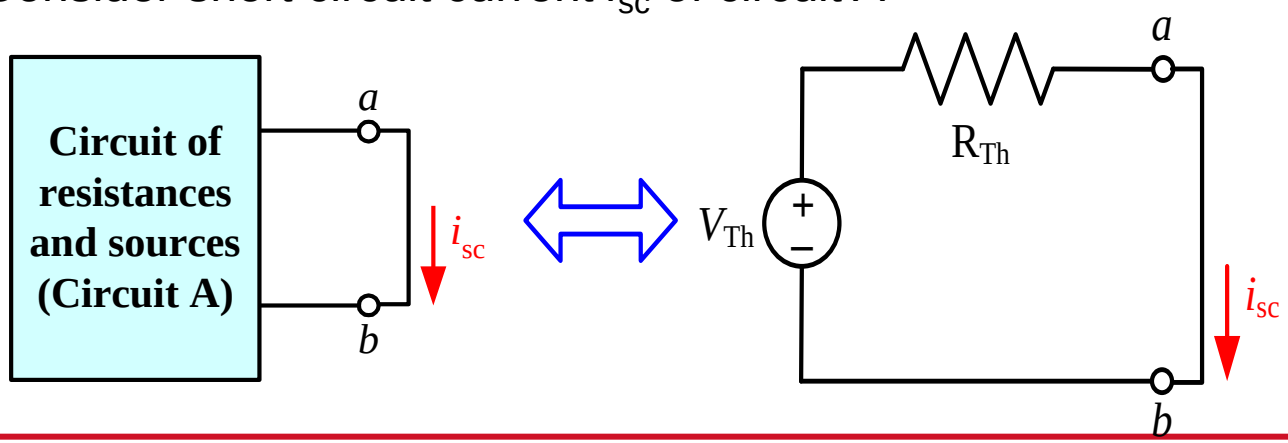

So we must have

$$V_{Th} = R_{Th}\, i_{sc}$$

$$\Rightarrow R_{Th} = \frac{V_{Th}}{i_{sc}} \quad \boxed{\Rightarrow R_{Th} = \frac{v_{oc}}{i_{sc}}}$$

Ch4. X. Thevenin and Norton Equivalent Circuits

Example 1: compute the Thévenin equivalent circuit for the circuit shown below.

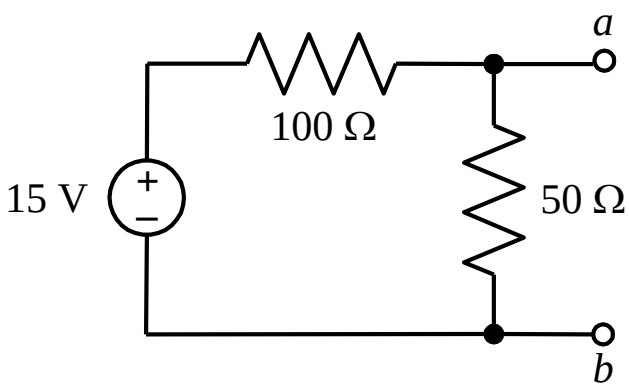

Step 1. Find V_{oc}

Use voltage division to obtain:

$$V_{\mathrm{Th}} = V_{\mathrm{oc}} = 15\frac{50}{100+50} = 15\frac{5}{15} = 5[\mathrm{V}]$$

Ch4. X. Thevenin and Norton Equivalent Circuits

Example 1: compute the Thévenin equivalent circuit for the circuit shown below.

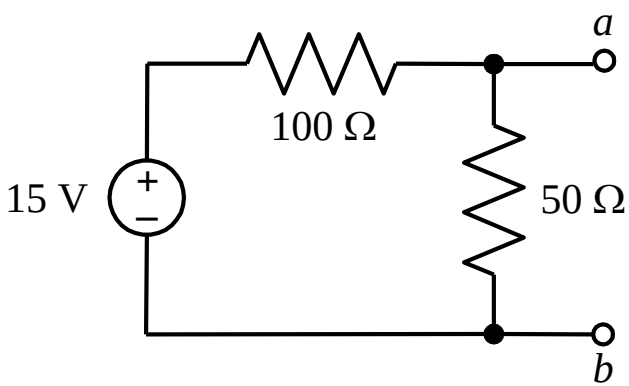

Step 2. Find I_{sc}

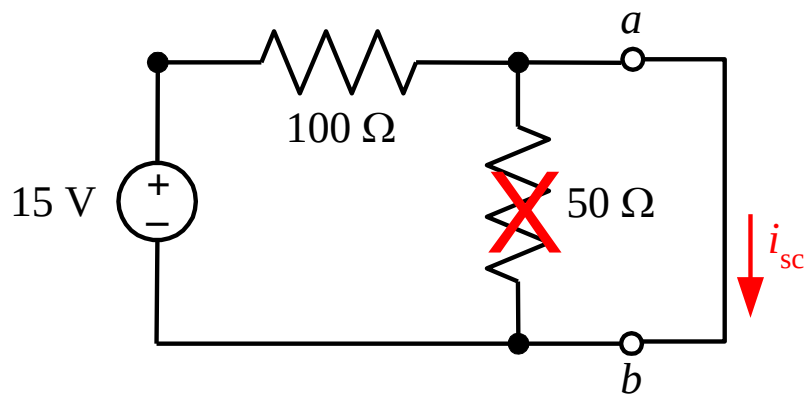

$$i_{sc} = \frac{15}{100} = \frac{3}{20}[\mathrm{A}]$$

Ch4. X. Thevenin and Norton Equivalent Circuits

Example 1: compute the Thévenin equivalent circuit for the circuit shown below.

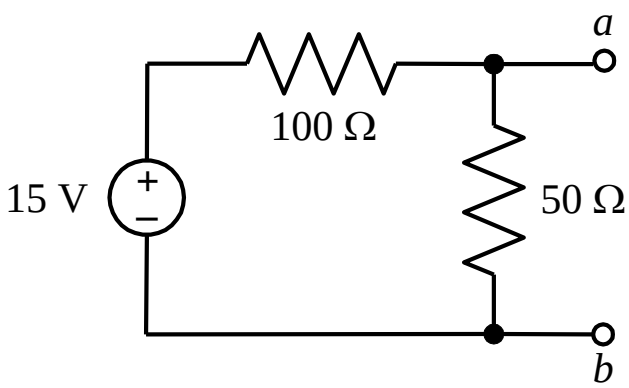

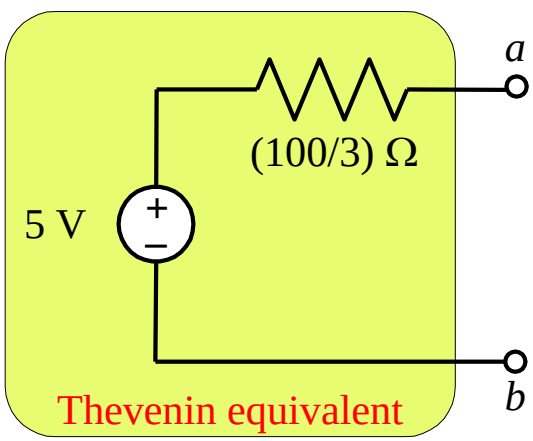

Step 3. Find R_{Th}

$$V_{oc} = 5[\mathrm{V}] \qquad i_{sc} = \frac{3}{20}[A]$$

$$R_{Th} = \frac{V_{oc}}{i_{sc}} = \frac{5}{\frac{3}{20}} = \frac{100}{3}[\Omega]$$

Ch4. X. Thevenin and Norton Equivalent Circuits

If circuit A does not contain dependent source, then R_{Th} can also be obtained by first zeroing the independent sources (resulting in circuit A*) and then computing its equivalent resistance as seen at the terminals.

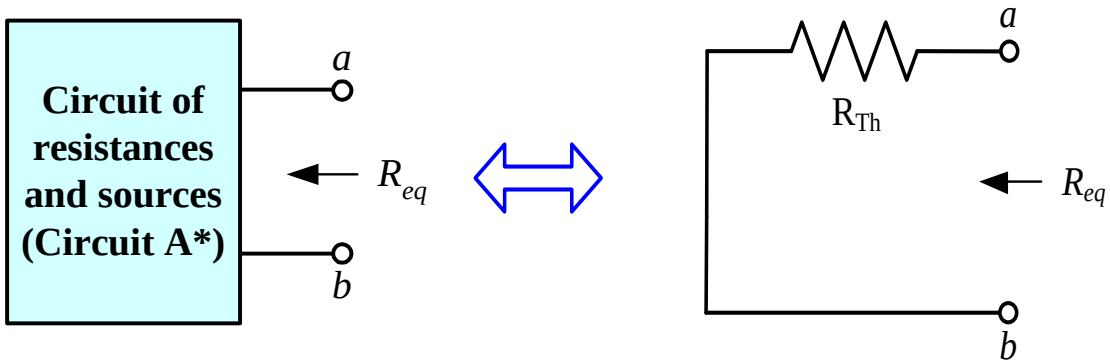

So we must have

$$R_{Th} = R_{eq}$$

Zeroing a voltage source corresponds to replacing it with a short circuit
Zeroing a current source corresponds to replacing it with an open circuit
Note that dependent current and voltage source are not zeroed in obtaining circuit A*. This is not an issue here as the above method does not apply to circuits with dependent sources, but later we will see a modification of this that does.

Ch4. X. Thevenin and Norton Equivalent Circuits

Example 2: compute the Thévenin equivalent circuit for the circuit shown below.

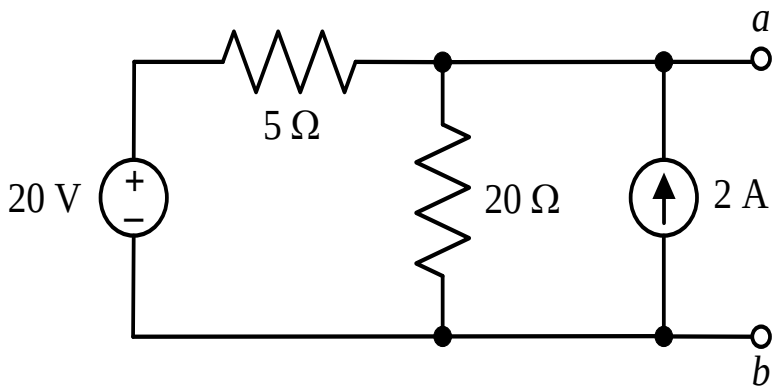

Question: What is R_{Th} ?

Answers: (A) 2Ω (B) 4Ω (C) 6Ω (D) 8Ω

Ch4. X. Thevenin and Norton Equivalent Circuits

Example 2: compute the Thévenin equivalent circuit for the circuit shown below.

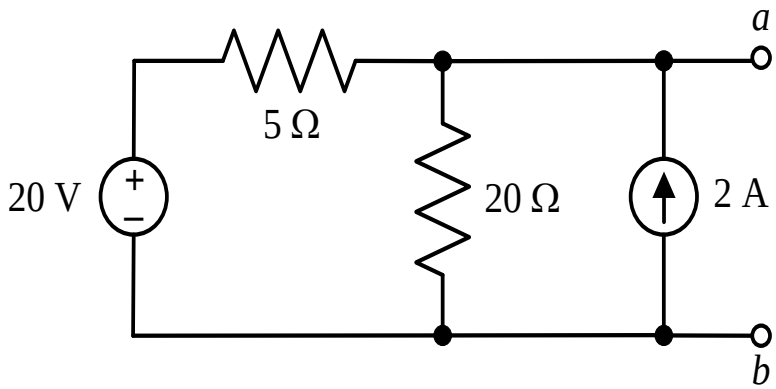

Question: What is V_{Th} ?

Answers: (A) 12V (B) 24V (C) 48V (D) 6V

Ch4. X. Thevenin and Norton Equivalent Circuits

Example 2: compute the Thévenin equivalent circuit for the circuit shown below.

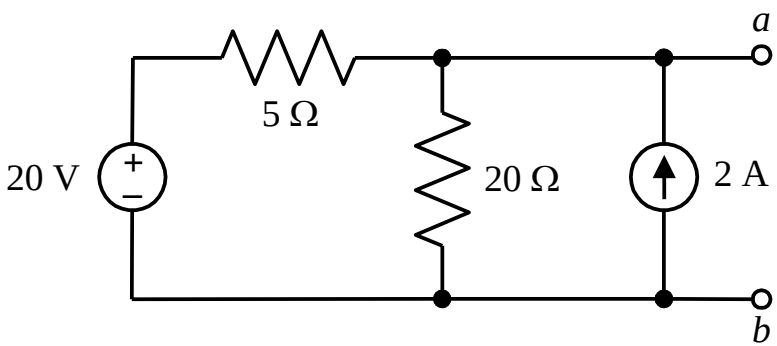

Step 1. Find R_{Th} by zeroing out independent sources.

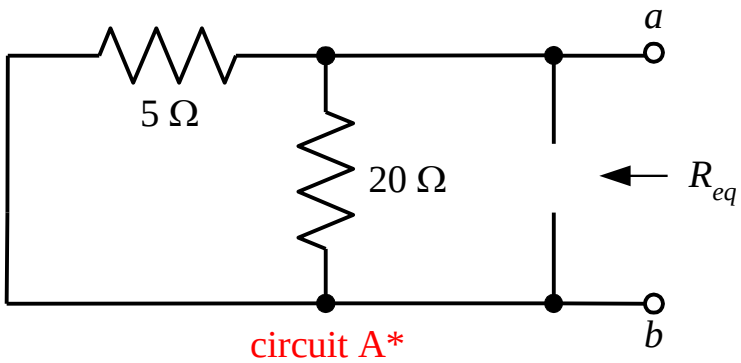

As 5 Ω and 20 Ω resistance are in parallel, we have

$$R_{eq} = \left(\frac{1}{5} + \frac{1}{20}\right)^{-1} = 4\ \Omega \qquad \Rightarrow R_{\mathrm{Th}} = 4\ \Omega$$

Ch4. X. Thevenin and Norton Equivalent Circuits

Example 2: compute the Thévenin equivalent circuit for the circuit shown below.

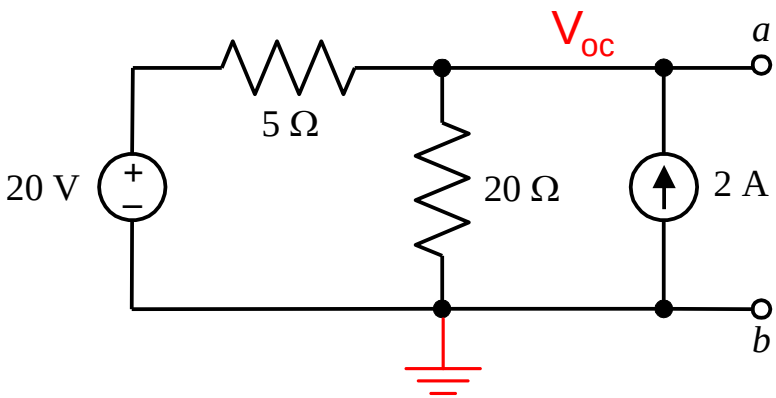

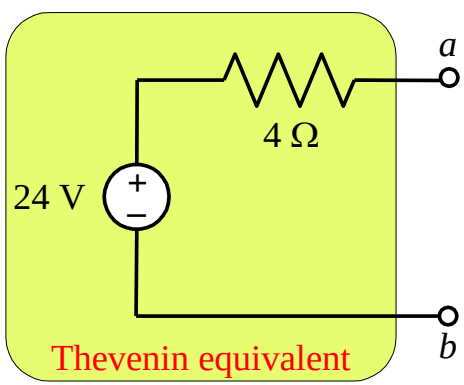

Step 2. Find V_{Th} by computing V_{oc}.

Use nodal analysis to find V_{oc}

$$\frac{V_{oc}-20}{5}+\frac{V_{oc}}{20}-2=0 \quad 4V_{oc}+V_{oc}-80=40$$

$$5V_{oc}=120 \Rightarrow V_{oc}=V_{Th}=24[\mathrm{V}]$$

Previous slide: $R_{Th}=4\ \Omega$

Ch4. X. Thevenin and Norton Equivalent Circuits

Example 3: compute the Thévenin equivalent circuit for the circuit shown below with dependent source.

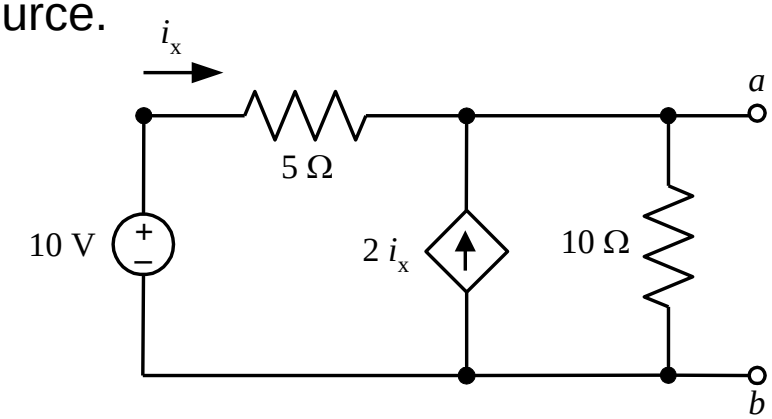

Step 1. Find V_{oc}

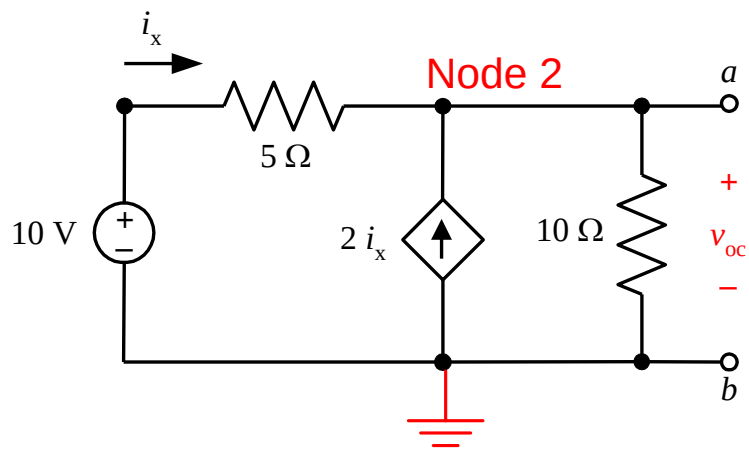

$$\text{KCL for node 2: } \frac{v_{oc}-10}{5} - 2\frac{10-v_{oc}}{5} + \frac{v_{oc}}{10} = 0$$

$$\Rightarrow V_{Th} = v_{oc} = \frac{60}{7}\ \text{V}$$

Ch4. X. Thevenin and Norton Equivalent Circuits

Example 3: compute the Thévenin equivalent circuit for the circuit shown below with dependent source.

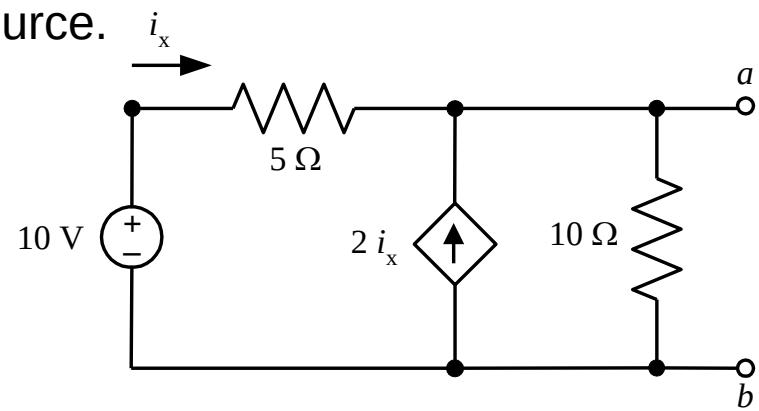

Step 2. Find I_{sc}

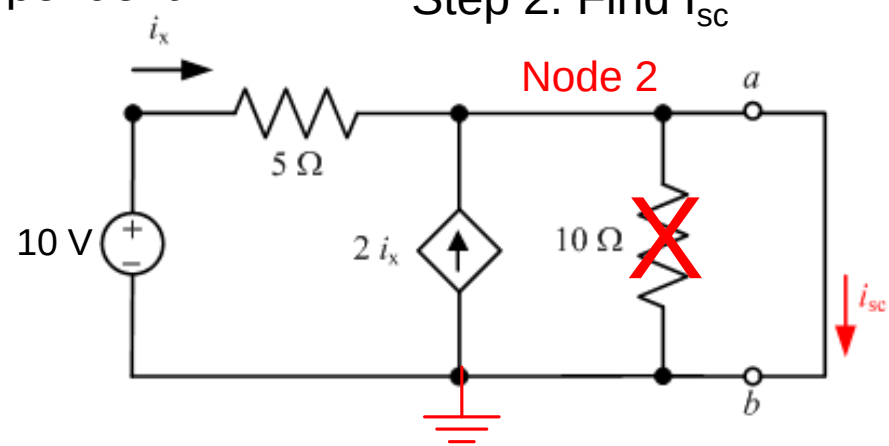

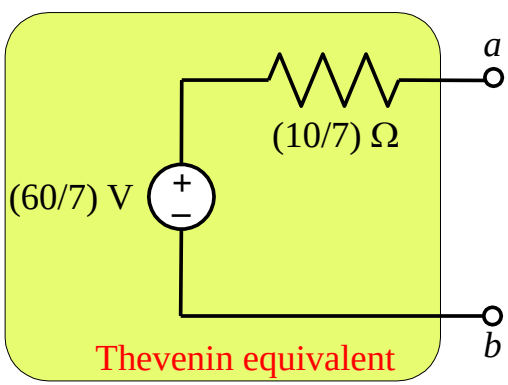

$$\text{KCL for node 2: } \frac{10}{5} + \frac{20}{5} = i_{sc} \qquad i_{sc} = 6 \text{ A}$$

Previous slide: $V_{\text{Th}} = \dfrac{60}{7}$ V

$$\text{Thus, } R_{\text{Th}} = \frac{v_{oc}}{i_{sc}} = \frac{\frac{60}{7}}{6} = \frac{10}{7}\ \Omega$$

Ch4. X. Thevenin and Norton Equivalent Circuits

If circuit A contains no independent sources, but one or more dependent sources, then the previous methods of determining R_{Th} will fail as we will get $v_{oc} = 0$ and $i_{sc} = 0$. However, the method of zeroing the independent sources (resulting in circuit A*) can be modified as follows by applying a test source.

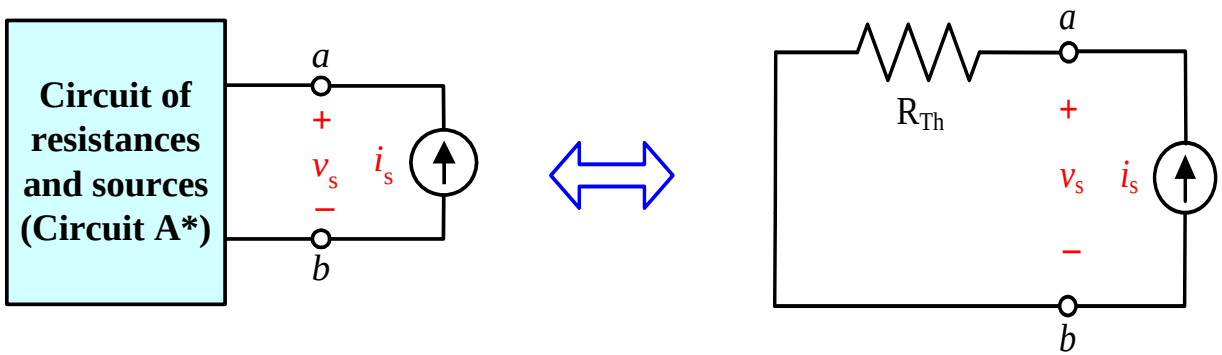

So we must have

$$\boxed{v_s = R_{Th}\, i_s}$$

Actually this method is the most general and will work in all the previous situations as well, except that the other methods are likely simpler.

Ch4. X. Thevenin and Norton Equivalent Circuits

Example 4: compute the Thévenin equivalent circuit for the circuit shown below with dependent source.

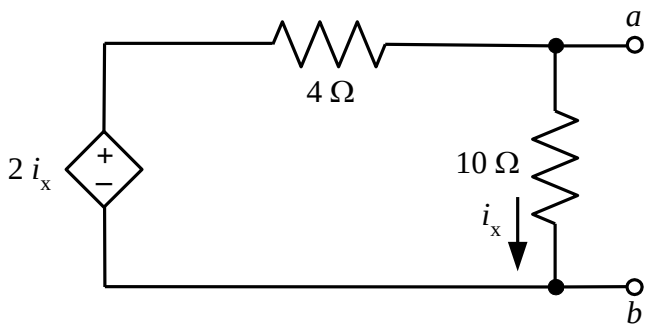

Question: Why is it wrong to compute $R_{Th} = V_{oc}/I_{sc}$?

Answers: (A) V_{oc} is 0

Ch4. X. Thevenin and Norton Equivalent Circuits

Example 4: compute the Thévenin equivalent circuit for the circuit shown below with dependent source.

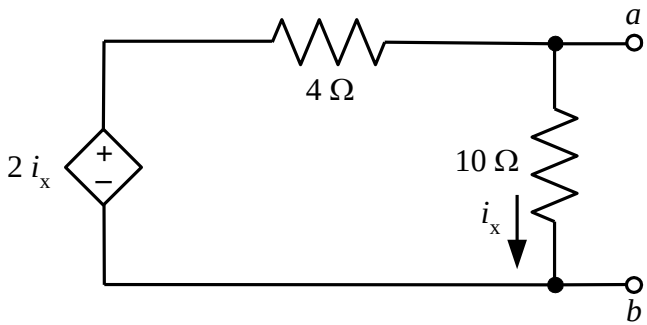

Step 1. Find V_{oc}

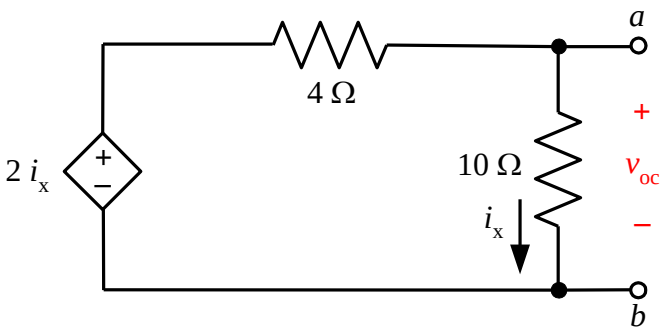

Ohm's law:

$$\frac{2i_x}{14} = i_x \Rightarrow \frac{i_x}{7} = i_x \Rightarrow i_x = 0$$

$$V_{\text{Th}} = v_{\text{oc}} = 0\,[\text{V}]$$

Ch4. X. Thevenin and Norton Equivalent Circuits

Example 4: compute the Thévenin equivalent circuit for the circuit shown below with dependent source.

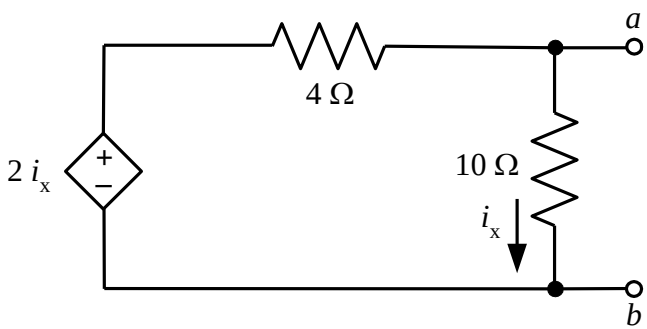

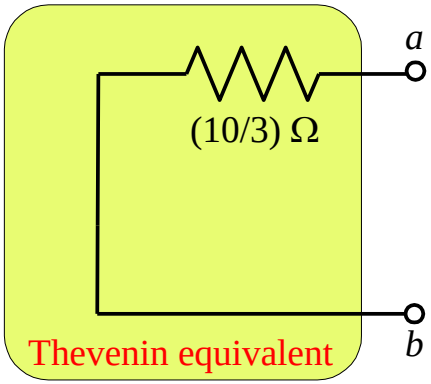

Step 2. Find R_{Th} by applying a test source.

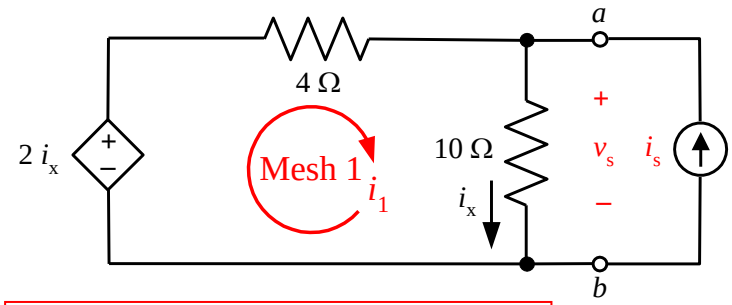

KVL for mesh 1:

$$-2(i_1+i_s)+4i_1+10(i_1+i_s)=0$$

$$\Rightarrow i_1=-2i_s/3 \text{ and } v_s=10(i_1+i_s)=(10/3)i_s$$

$$R_{Th}=\frac{v_s}{i_s}=(10/3)\ \Omega$$

Previous slide: $V_{Th}=0$ V

Ch4. X. Thevenin and Norton Equivalent Circuits

Norton Equivalent Circuit

Related to Thévenin equivalent circuit by a source transformation

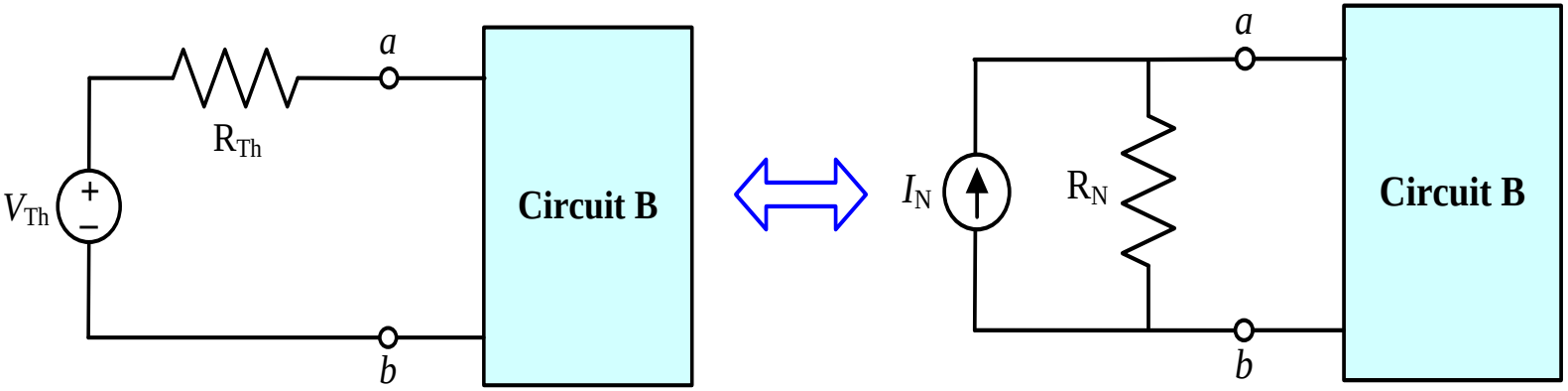

$$R_N = R_{Th}$$

$$I_N = V_{Th} / R_{Th} = i_{sc} \quad \Leftrightarrow \quad V_{Th} = R_{Th} I_N$$

Ch4. X. Thevenin and Norton Equivalent Circuits

Norton Equivalent Circuit

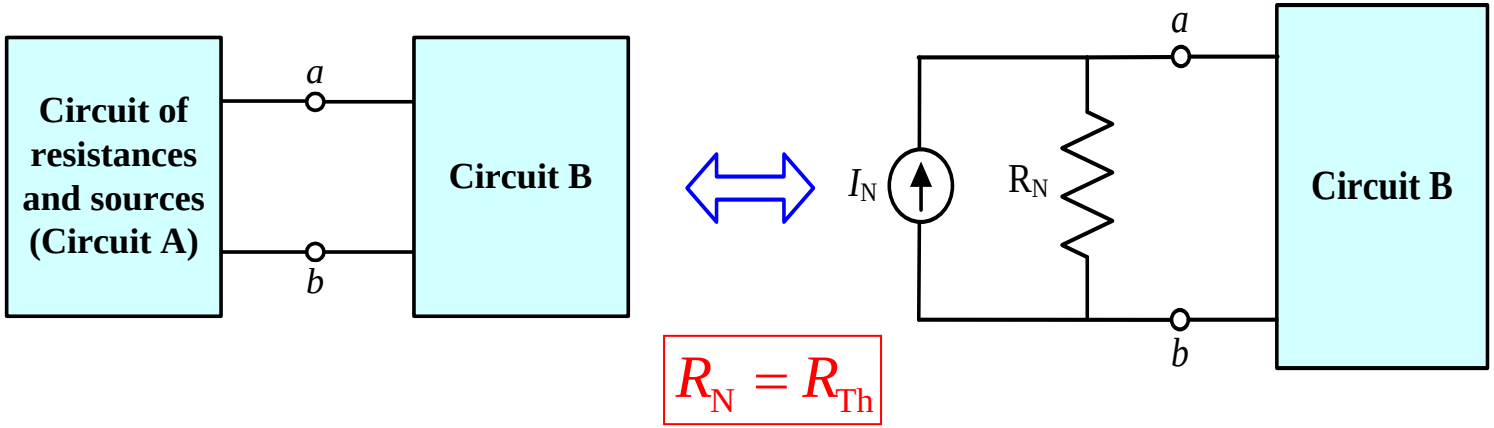

$$R_N = R_{Th}$$

Any two-terminal circuit containing resistances and sources can be replaced by an equivalent circuit consisting of just an independent current source in parallel with a resistance (without affecting the behaviour of the rest of the circuit). Assumptions are same as those for Thévenin equivalent circuit.

Ch4. X. Thevenin and Norton Equivalent Circuits

Summary:

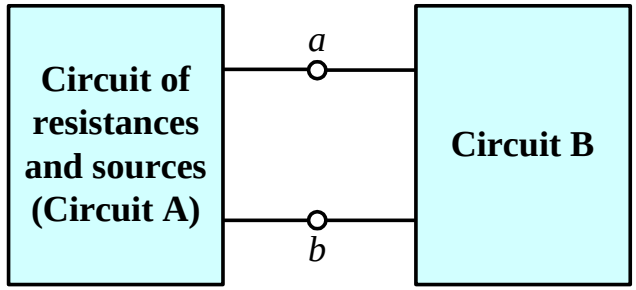

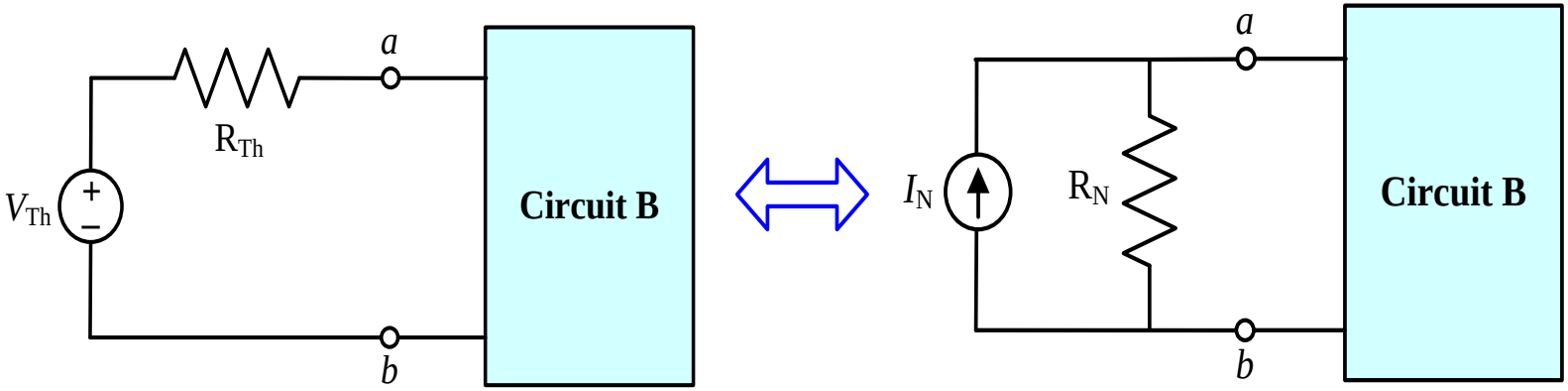

$$V_{\mathrm{Th}} = V_{\mathrm{oc}} \qquad R_{\mathrm{Th}} = R_{\mathrm{N}} \qquad I_{\mathrm{N}} = I_{\mathrm{sc}}$$

Ch4. X. Thevenin and Norton Equivalent Circuits

Example 5: compute the Norton equivalent circuit for the circuit shown below.

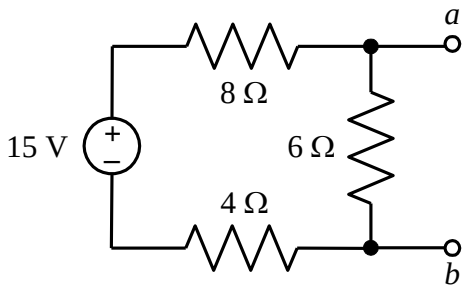

Step 1. Find R_N by zeroing out independent sources.

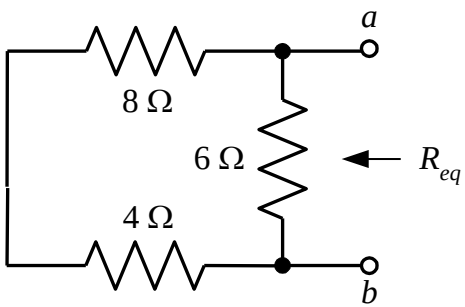

circuit A*

Combining resistances in series and parallel we have

$$R_{eq} = \left(\frac{1}{6} + \frac{1}{(8+4)}\right)^{-1} = 4\ \Omega \quad \Rightarrow R_N = 4\ \Omega$$

Ch4. X. Thevenin and Norton Equivalent Circuits

Example 5: compute the Norton equivalent circuit for the circuit shown below.

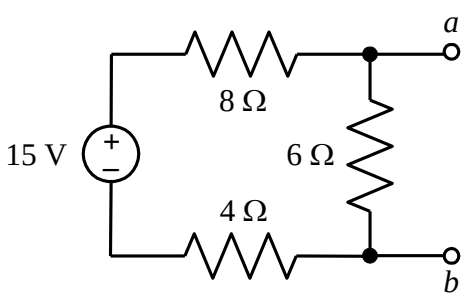

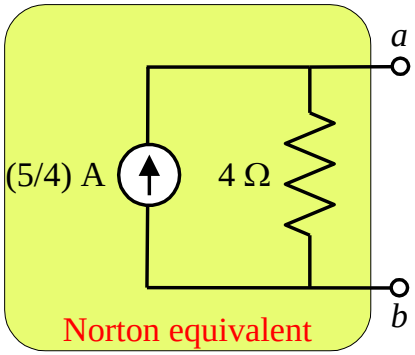

Step 2. Find I_N by computing I_{sc}.

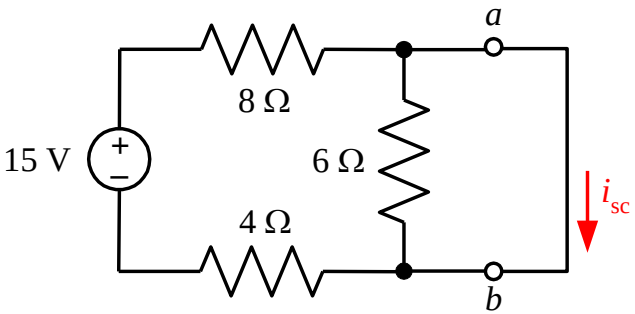

Ohm's law:

$$I_N = i_{sc} = \frac{15}{(8+4)} = \frac{5}{4}[\mathrm{A}]$$

Previous slide: $R_N = 4\ \Omega$

Ch4. X. Thevenin and Norton Equivalent Circuits

Practical design "Rule of thumb":

We design complex circuits as a cascade of smaller circuits. Therefore, we think and design in terms of input and output resistances. Thus, Thevenin and Norton equivalent circuits are frequently used in practice.

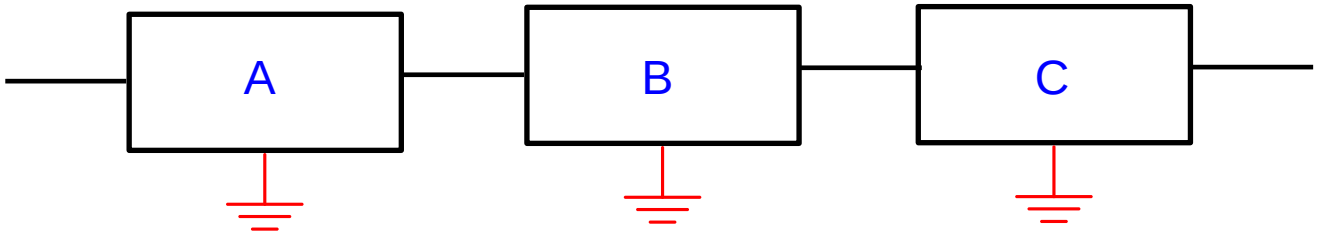

In order to ensure one circuit block has negligible influence on the next circuit block, we use a design rule of thumb:

$$R_{out} \text{ for A } \leq \frac{1}{10} R_{in} \text{ for B}$$

MAXIMAL POWER TRANSFER

Ch4. XI. Maximum Power Transfer

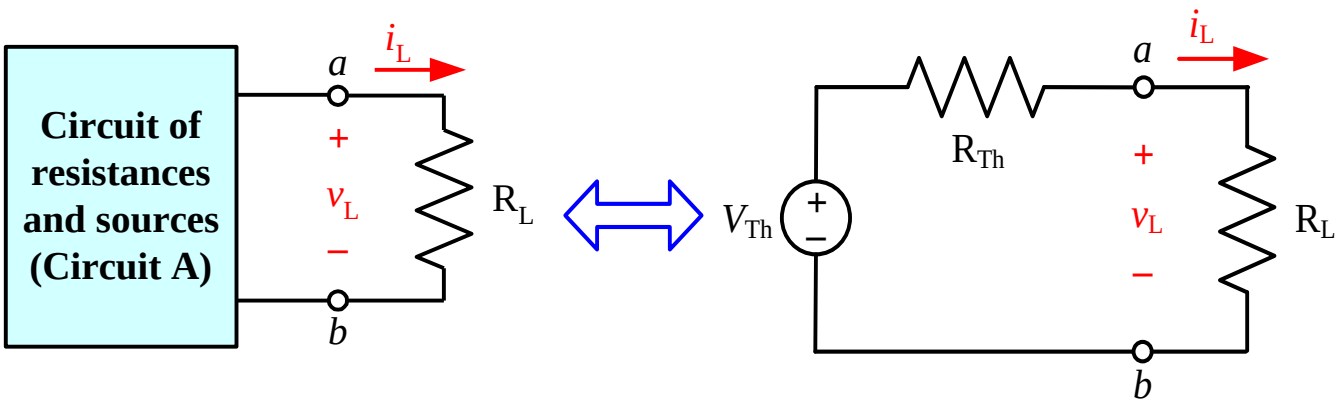

If the entire circuit is replaced by its Thevenin equivalent except for the load, the power delivered to the load is:

What load resistance maximizes the power transferred to the load ?

$$P = i^2 R_L = \left(\frac{V_{Th}}{R_{Th} + R_L} \right)^2 R_L$$

MAXIMAL POWER TRANSFER

Ch4. XI. Maximum Power Transfer

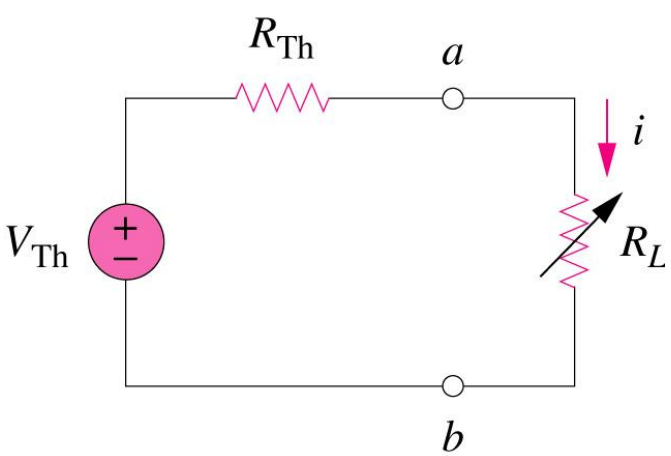

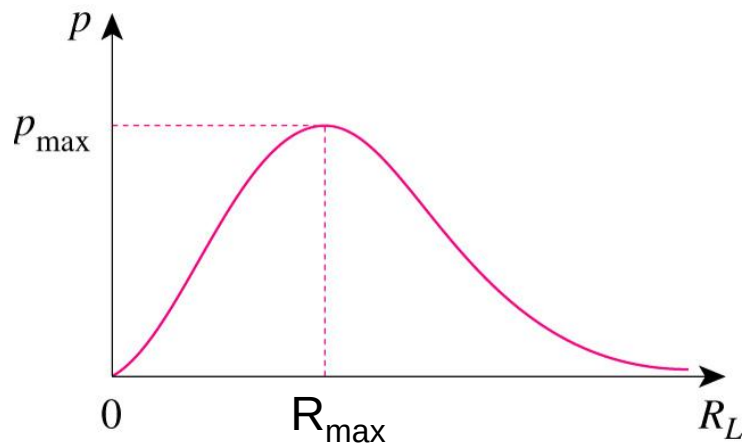

$$p_{load} = i_L^2 R_L = \frac{V_{Th}^2 R_L}{(R_{Th} + R_L)^2}$$

The power transfer profile with different R_L

What is R_{max} ?

To maximize p_{load} we need

$$\frac{dp_{load}}{dR_L} = \frac{V_{Th}^2 (R_{Th} + R_L)^2 - 2V_{Th}^2 R_L (R_{Th} + R_L)}{(R_{Th} + R_L)^4} = \frac{V_{Th}^2 (R_{Th}^2 - R_L^2)}{(R_t + R_L)^4} = \frac{V_{Th}^2 (R_{Th} - R_L)}{(R_{Th} + R_L)^3} = 0$$

MAXIMAL POWER TRANSFER

Ch4. XI. Maximum Power Transfer

$$\frac{dp_{load}}{dR_L} = \frac{V_{\mathrm{Th}}^2 (R_{\mathrm{Th}} + R_L)^2 - 2V_{\mathrm{Th}}^2 R_L (R_{\mathrm{Th}} + R_L)}{(R_{\mathrm{Th}} + R_L)^4} = \frac{V_{\mathrm{Th}}^2 (R_{\mathrm{Th}}^2 - R_L^2)}{(R_{\mathrm{Th}} + R_L)^4} = \frac{V_{\mathrm{Th}}^2 (R_{\mathrm{Th}} - R_L)}{(R_{\mathrm{Th}} + R_L)^3} = 0$$

$$\Rightarrow R_{\mathrm{Th}} - R_L = 0$$

To be sure that this indeed maximizes p_{load} we should verify

$$\frac{d^2 p_{load}}{dR_L^2} = -\frac{V_{\mathrm{Th}}^2 (4R_{\mathrm{Th}} - 2R_L)}{(R_{\mathrm{Th}} + R_L)^4} < 0 \quad \text{for } R_L = R_L^{\max}$$

$$\boxed{\text{i.e. } R_L^{\max} = R_{\mathrm{Th}}} \qquad \boxed{p_{load}^{\max} = V_{\mathrm{Th}}^2 / (4R_{\mathrm{Th}})}$$

MAXIMAL POWER TRANSFER

Ch4. XI. Maximum Power Transfer

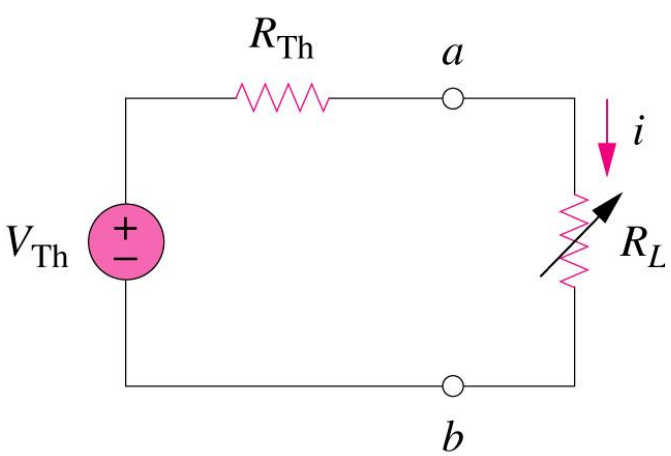

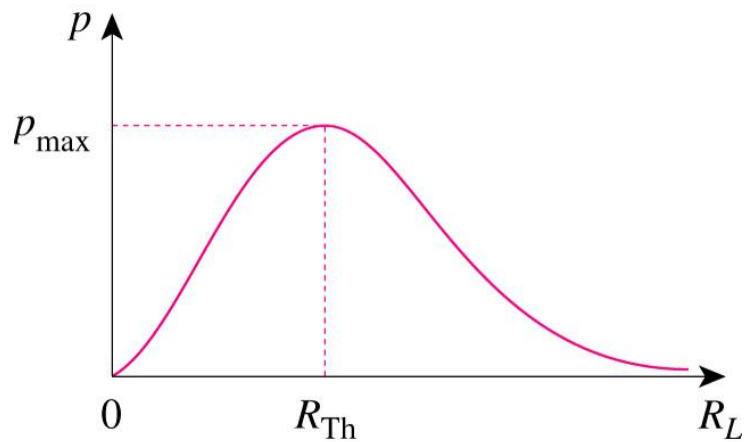

Consider now efficiency:

$$\text{efficiency} = \frac{p_{load}}{p_{input}} \times 100\%$$

Note that maximum power is *not* the point for maximum efficiency, which is achieved for $R_L \rightarrow \infty$

MAXIMAL POWER TRANSFER

Ch4. XI. Maximum Power Transfer

Example 1: find the load resistance R_L for maximum power transfer for the circuit

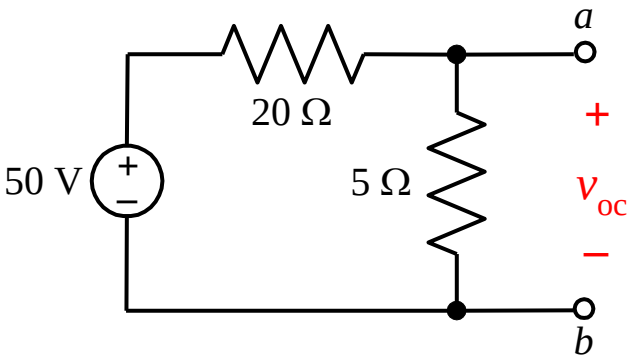

Step 1. Find R_{Th} by zeroing out independent sources.

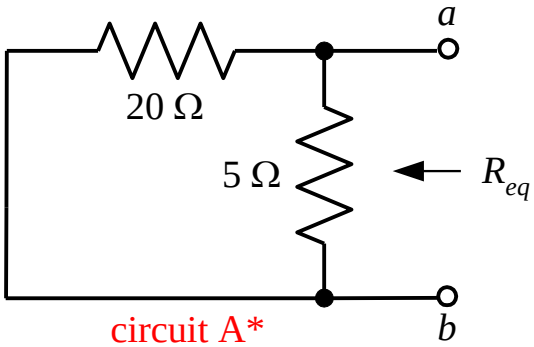

$$\Rightarrow R_{\text{Th}} = R_{eq} = \left(\frac{1}{20} + \frac{1}{5}\right)^{-1} = 4\ \Omega$$

So maximum power transfer occurs for $R_L = 4\ \Omega$

Step 2. Find V_{Th} by voltage division

$$V_{\text{Th}} = v_{oc} = \left(\frac{5}{20+5}\right)(50) = 10\ \text{V}$$

Maximum power in load: $p_{load}^{\max} = V_{\text{Th}}^2 / (4R_{\text{Th}}) = \dfrac{100}{4 \cdot 4} = 6.25[\text{W}]$

OPERATIONAL AMPLIFIER

Ch5. I. Operational Amplifier Introduction

› Operational Amplifier Integrated Circuit: The operational amplifier is an integrated circuit and is often referred to as an “OpAmp.” It is an active circuit element because it can generate electric energy.

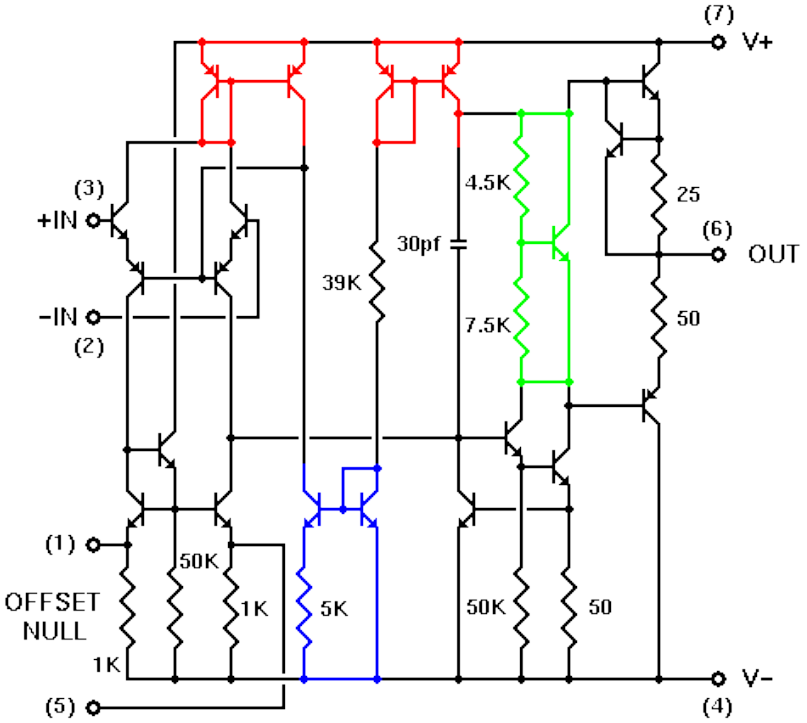

OPERATIONAL AMPLIFIER

Ch5. I. Operational Amplifier Introduction

› Operational Amplifier Integrated Circuit: Usage of opamp circuits is ubiquitous.

Ch5. I. Operational Amplifier Introduction

› Operational Amplifier Integrated Circuit: A typical dual inline package for the OpAmp is shown below on the left. On the right is shown the standard circuit symbol.

Dual-Inline Package (DIP)

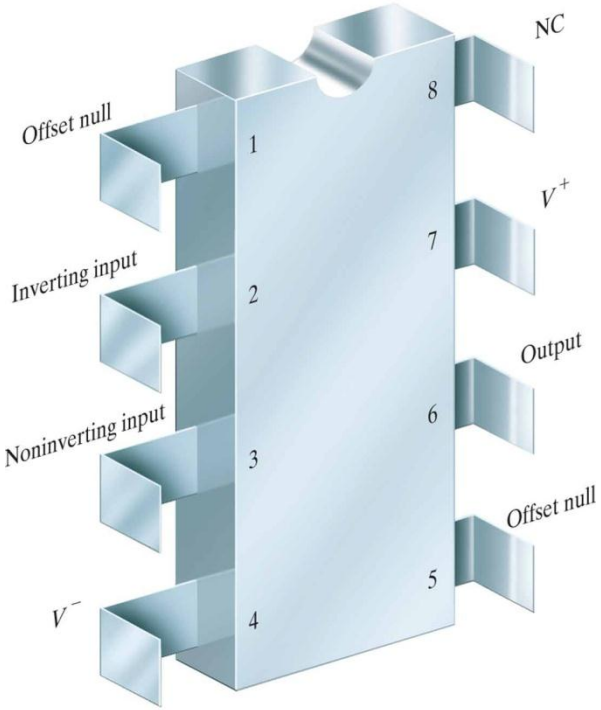

Circuit Symbol

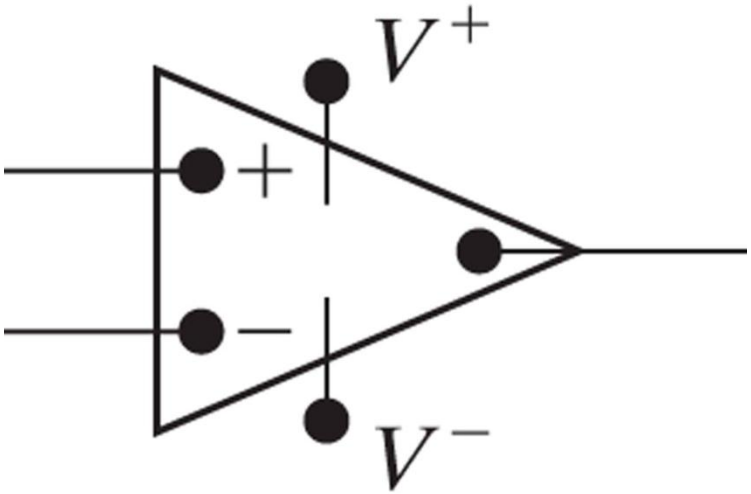

Ch5. I. Operational Amplifier Introduction

› Operational Amplifier Integrated Circuit:

› Terminal Names: Excluding the two power supply voltages, it is a three terminal device. (1) Noninverting input; (2) Inverting input; (3) Output.

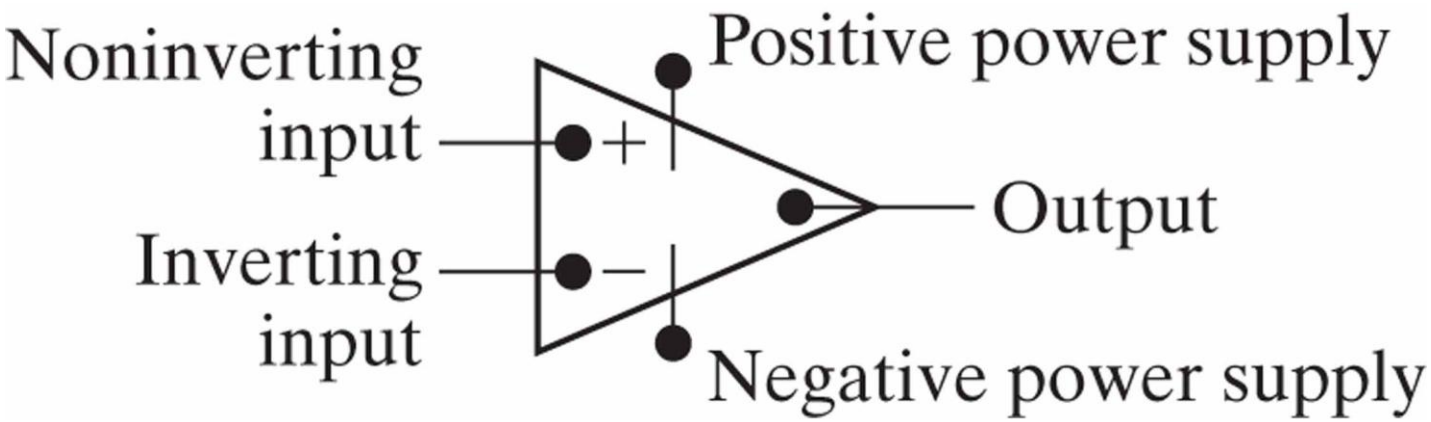

Ch5. I. Operational Amplifier Introduction

› Operational Amplifier Integrated Circuit (Aside on Offset Nulling):

› Offset Null pins enable zeroing the output voltage when the noninverting and inverting inputs are equal.

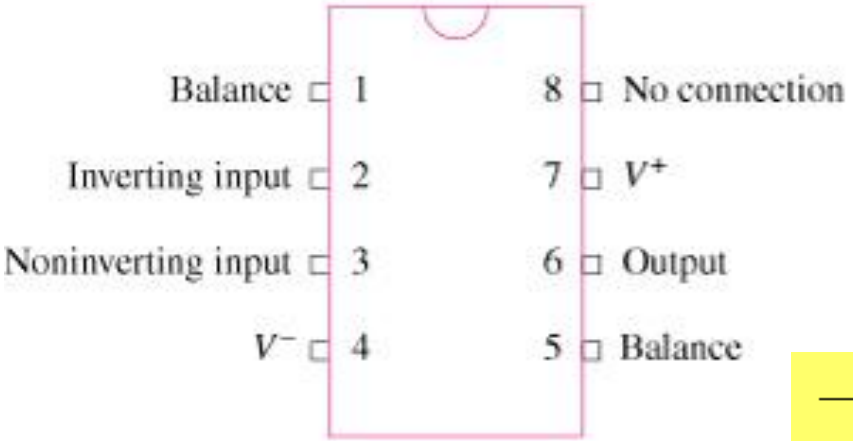

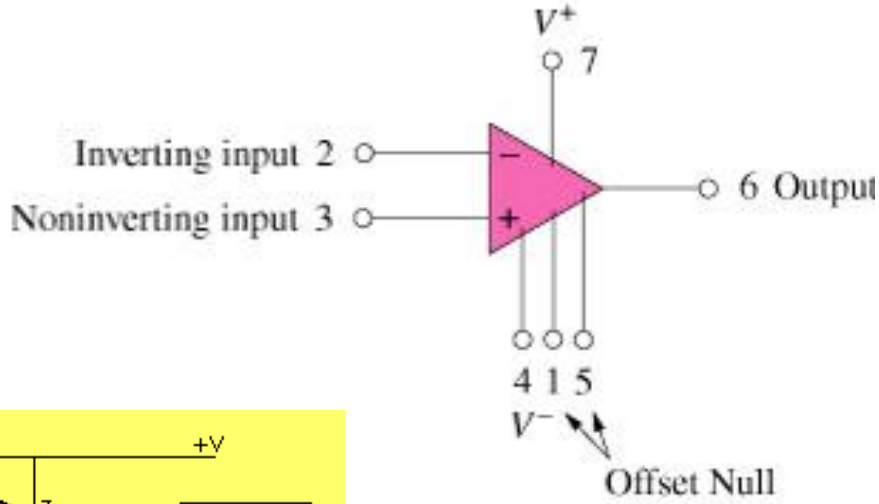

10 kΩ pot between pins 1 and 5. Center of the pot is connected to 0 volts. Adjust the pot to zero the voltage.

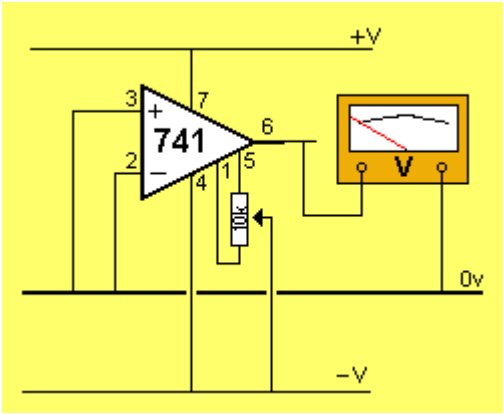

Ch5. I. Operational Amplifier Introduction

› Aside note on potentiometers

- A potientiometer is simply a three terminal resistor with a sliding contact to make it easy to form an adjustable voltage divider.

Simple Volume Control

Potentiometer

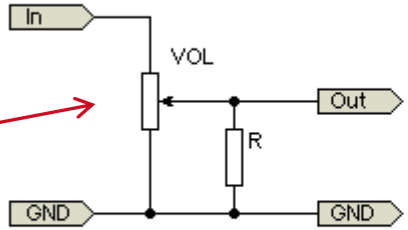

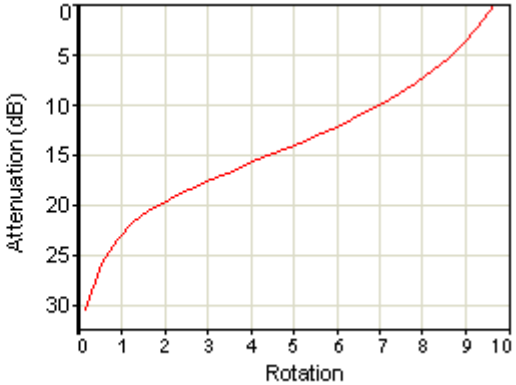

Ch5. I. Operational Amplifier Introduction

› Operational Amplifier Integrated Circuit

- If an opamp consists of dozens of transistors, why do we study it now?
- Because using nodal analysis and an additional two rules, you can analyze opamp circuits.
- Recall our discussion of Levels of Abstraction: engineers can design and work at different levels of abstraction, without worrying about details at lower or higher levels of abstraction.
- Provides an example using a dependent source model.

OPERATIONAL AMPLIFIER

Ch5. II. OpAmp Linear Model

› Linear Model

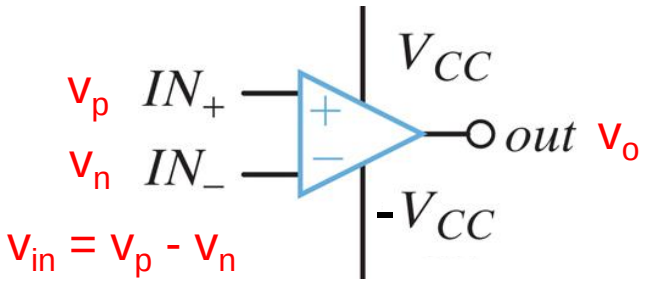

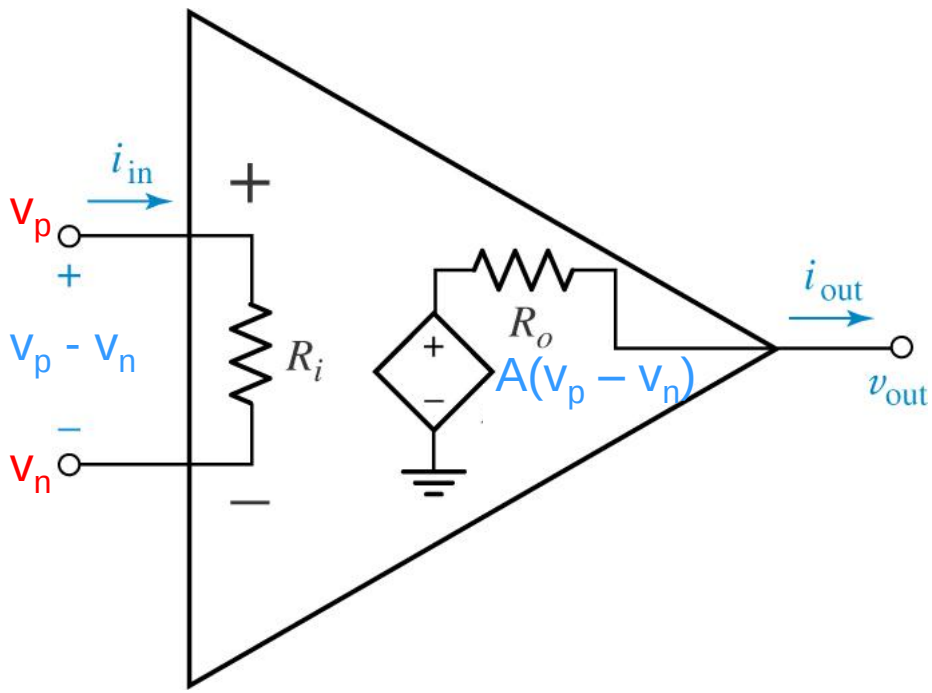

OPERATIONAL AMPLIFIER

Ch5. II. OpAmp Linear Model

› Linear Model

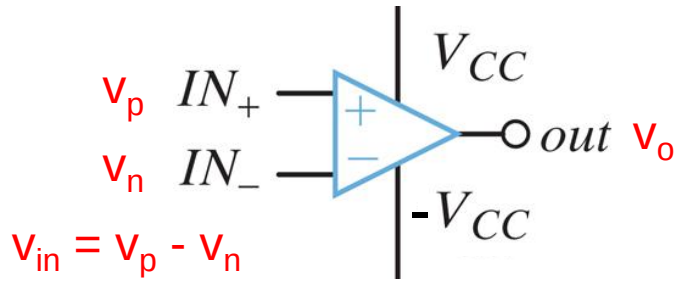

LINEAR MODEL

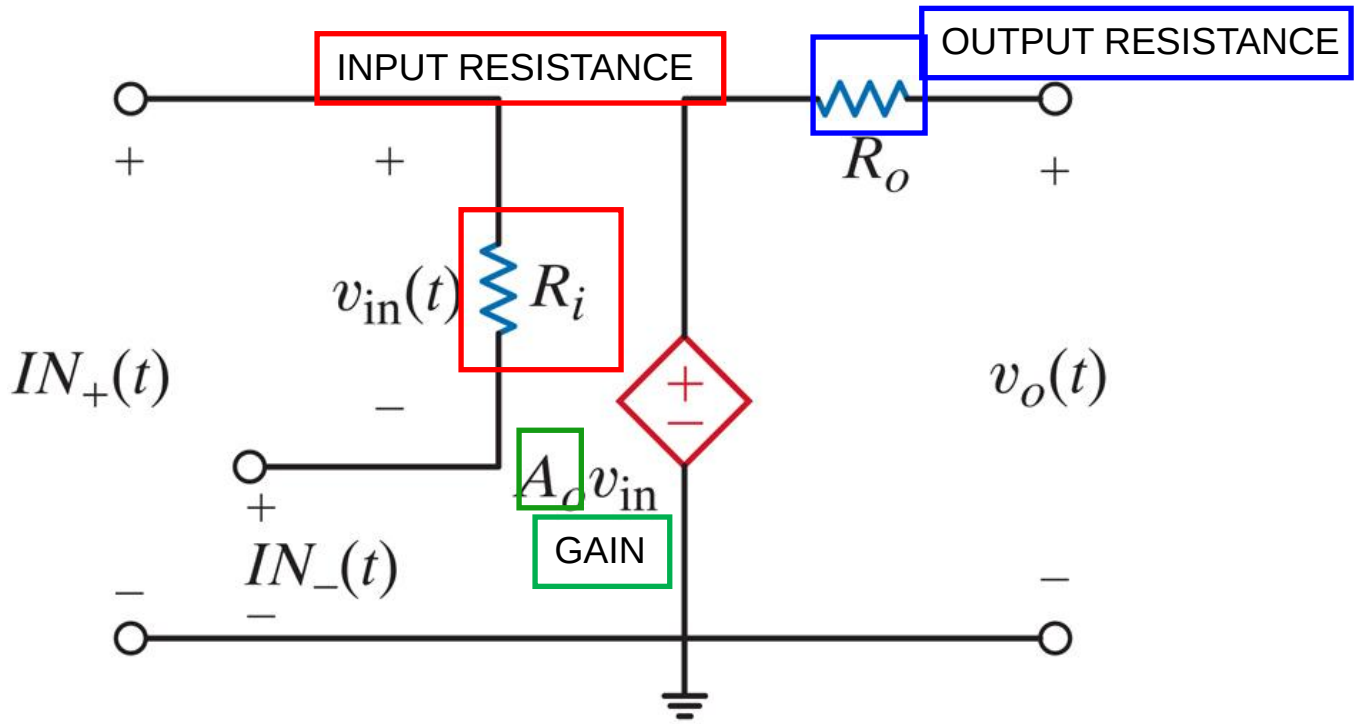

TYPICAL VALUES

R_i : $10^5\Omega - 10^{12}\Omega$

R_O : $1\Omega - 50\Omega$

A : $10^5 - 10^7$

OPERATIONAL AMPLIFIER

Ch5. II. OpAmp Linear Model

› OpAmp Saturation

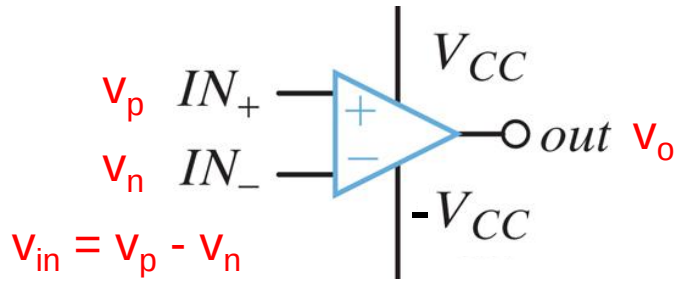

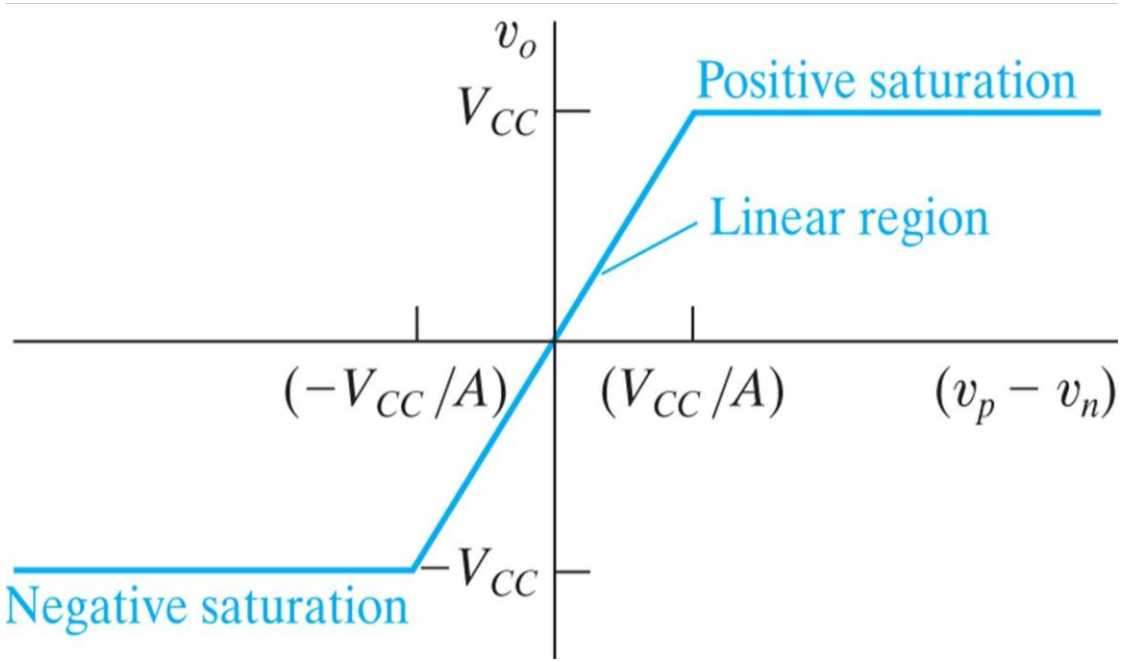

Ch5. III. Ideal OpAmp Models

› Simplifying the Linear Model: Semi-Ideal and Ideal Models

In the semi-ideal opamp model the open-loop gain is large and finite. In the ideal opamp model the open-loop gain goes to infinity. For both models, the input resistance is infinite and the output resistance is zero.

Parameter	Semi-Ideal	Ideal
Open-loop gain, A	10^5 to 10^8 Ω	∞
Input resistance, R_i	∞ Ω	∞ Ω
Output resistance, R_o	0 Ω	0 Ω

Ch5. III. Ideal OpAmp Models

› Ideal and Semi-Ideal Operational Amplifier Models

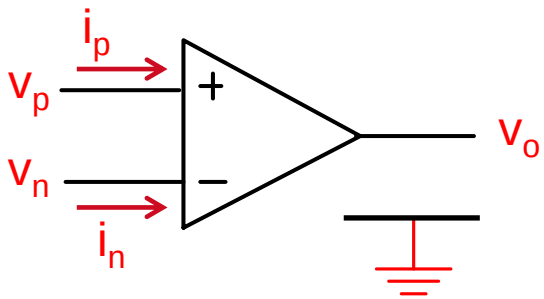

Ideal (Golden Rules) Model

1. $v_p = v_n$
2. $i_p = i_n = 0$

Sufficient to determine v_o

Semi-Ideal Model

1. $v_o = A(v_p - v_n)$
2. $i_p = i_n = 0$

Ch5. III. Ideal OpAmp Models

› Ideal and Semi-Ideal Operational Amplifier Models

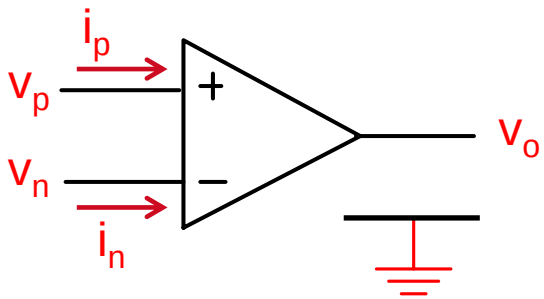

Using either the Ideal or Semi-Ideal opamp models, opamp circuits are analyzed using Nodal Analysis at the Input Terminals Only.

We never apply nodal analysis at the output terminal because we do not know the current supplied by the power supply.

Ch5. IV. Fundamental OpAmp Circuits

› OpAmp Circuit: Voltage Follower

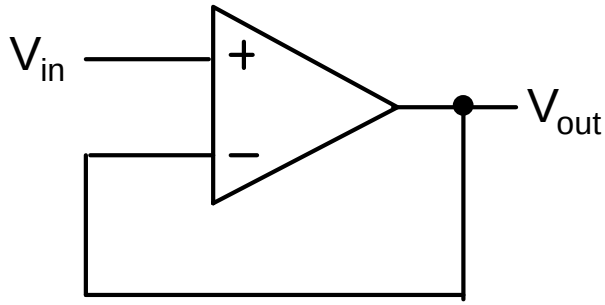

Ideal Analysis

$v_p = V_{in}$

$v_n = V_{in}$

$V_{out} = V_{in}$

Semi-Ideal Analysis

$v_p = V_{in}$

$V_{out} = A(V_{in} - V_{out})$

$$(1+A)V_{out} = AV_{in}$$

$$V_{out} = \frac{A}{1+A}V_{in}$$

In the limit that the open-loop gain, *A*, goes to infinity, then the semi-ideal model is the equivalent to the ideal model.

Ch5. IV. Fundamental OpAmp Circuits

› OpAmp Circuit: Voltage Follower

CONNECTION WITHOUT BUFFER

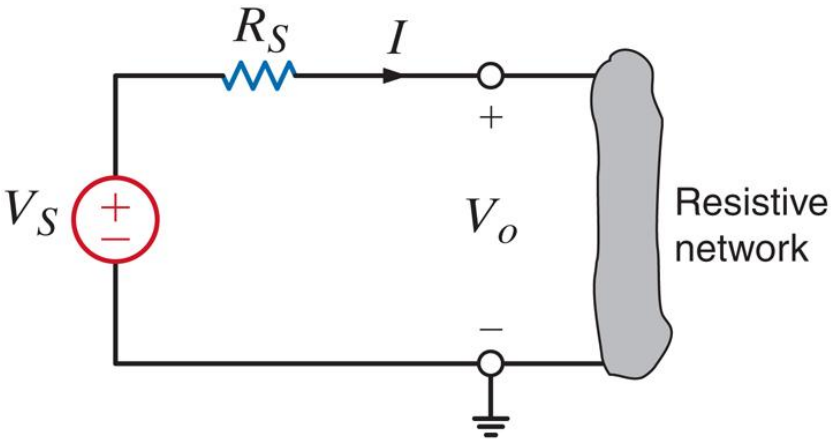

$$V_o = V_S - IR_S$$

CONNECTION WITH BUFFER

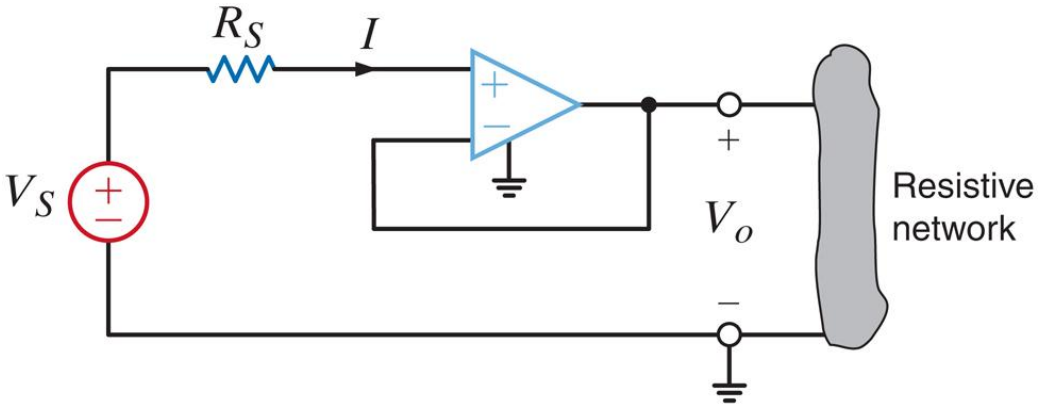

$$V_o = V_S$$

The voltage source supplies no power, instead the power comes from the amplifier.

Ch5. IV. Fundamental OpAmp Circuits

› OpAmp Circuit: Non-Inverting Amplifier

Ideal Analysis:

$$v_p = V_{in}$$

$$v_n = V_{in}$$

$$\frac{V_{in}}{R_a} + \frac{V_{in} - V_{out}}{R_b} = 0$$

$$V_{out} = \frac{R_a + R_b}{R_a} V_{in}$$

$$K_p = \frac{R_a + R_b}{R_a}$$

$$V_{out} = K_p V_{in}$$

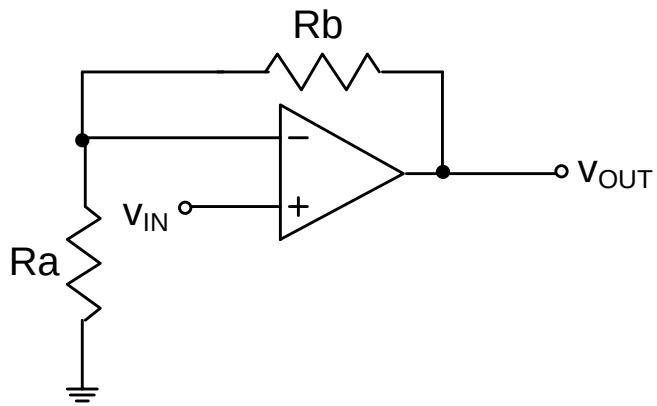

Semi-Ideal Analysis:

$$V_{out} = \frac{K_p}{1 + \frac{K_p}{A}} V_{in}$$

In the limit that the open-loop gain, *A*, goes to infinity, then the semi-ideal model is the equivalent to the ideal model.

OPERATIONAL AMPLIFIER

Ch5. IV. Fundamental OpAmp Circuits

› OpAmp Circuit: Non-Inverting Amplifier

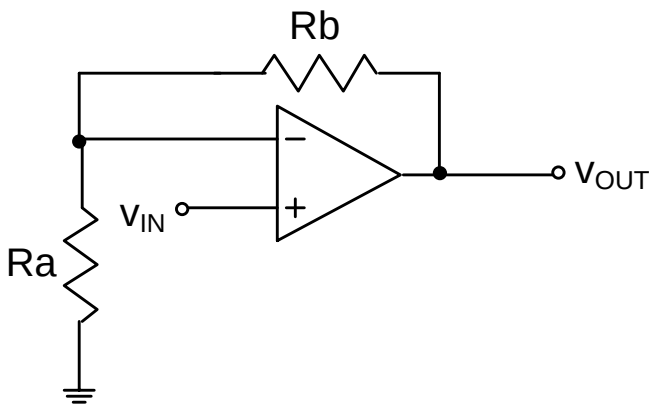

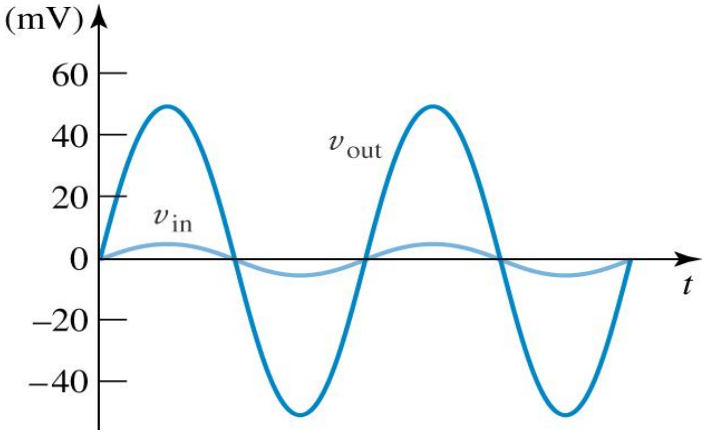

Output characteristics.

Ch5. IV. Fundamental OpAmp Circuits

› OpAmp Circuits: Inverting Amplifier

Ideal Analysis:

$$v_p = 0$$

$$v_n = 0$$

$$\frac{-V_{in}}{R_a} + \frac{-V_{out}}{R_b} = 0$$

$$V_{out} = -\frac{R_b}{R_a} V_{in}$$

$$K_n = \frac{R_b}{R_a} \text{ and } K_p = \frac{R_a + R_b}{R_a}$$

$$V_{out} = -K_n V_{in}$$

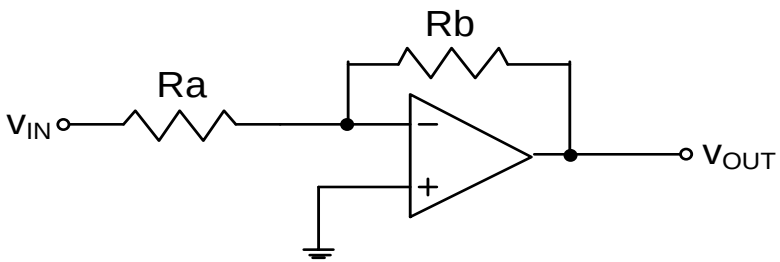

Semi-Ideal Analysis:

$$V_{out} = -\frac{K_n}{1 + \frac{K_p}{A}} V_{in}$$

In the limit that the open-loop gain, *A*, goes to infinity, then the semi-ideal model is the equivalent to the ideal model.

Ch5. IV. Fundamental OpAmp Circuits

› OpAmp Circuits: Inverting Amplifier

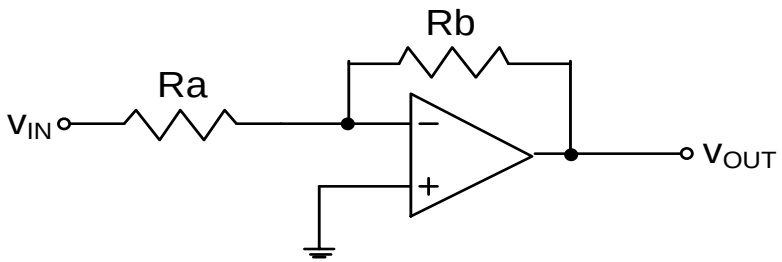

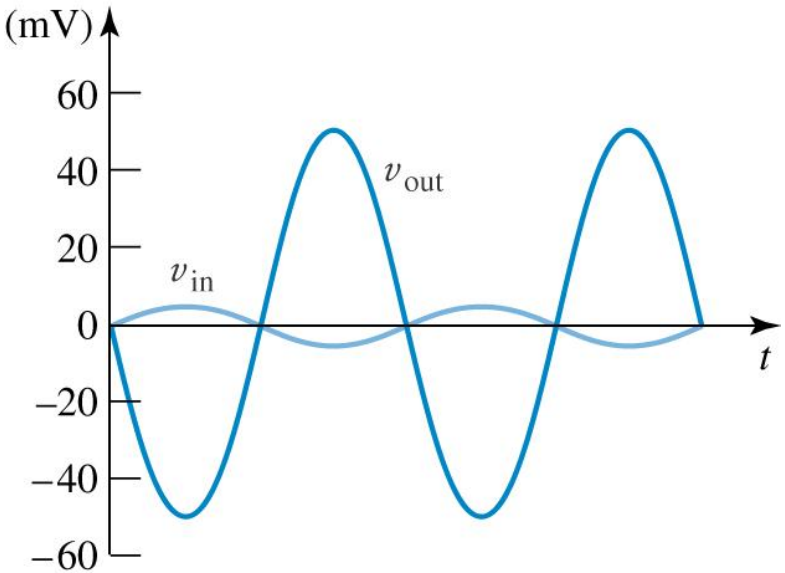

Output characteristics.

Ch5. IV. Fundamental OpAmp Circuits

› OpAmp Circuits: Summing Amplifier

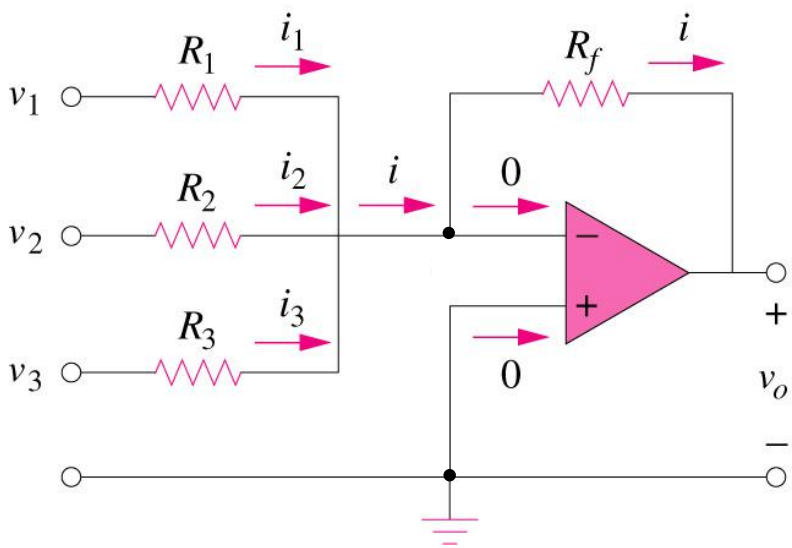

Ideal Analysis:

$$v_p = 0$$

$$v_n = 0$$

Apply nodal analysis at v_n

$$\frac{v_1}{R_1} + \frac{v_2}{R_2} + \frac{v_3}{R_3} + \frac{v_o}{R_f} = 0$$

$$v_o = -\left(\frac{R_f}{R_1}v_1 + \frac{R_f}{R_2}v_2 + \frac{R_f}{R_3}v_3\right)$$

Ch5. IV. Fundamental OpAmp Circuits

› OpAmp Circuits: Summing Amplifier

Example: Calculate i_o and v_o .

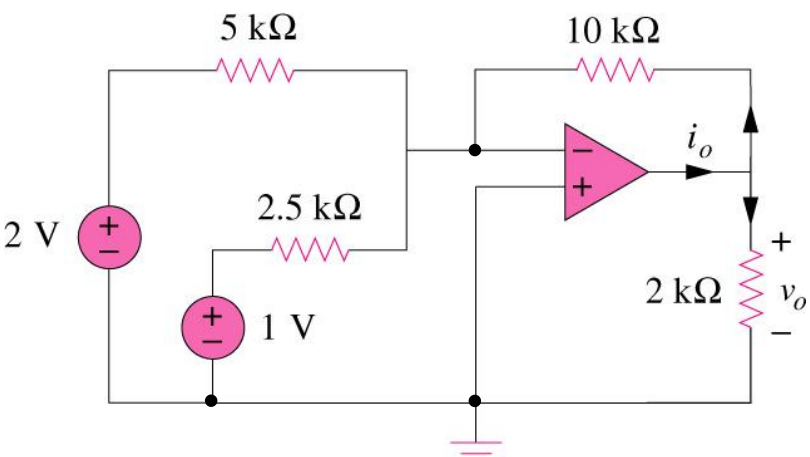

Ideal Analysis:

$$v_p = 0$$

$$v_n = 0$$

Apply nodal analysis at v_n

$$\frac{2}{5000} + \frac{1}{2500} + \frac{v_o}{10000} = 0$$

$$v_o = -8$$

$$i_o = \frac{-8}{10000} - \frac{8}{2000} = -4.8[\text{mA}]$$

Note: We never, never, never apply nodal analysis at the output node of the opamp!

Ch5. IV. Fundamental OpAmp Circuits

› OpAmp Circuits: Difference Amplifier

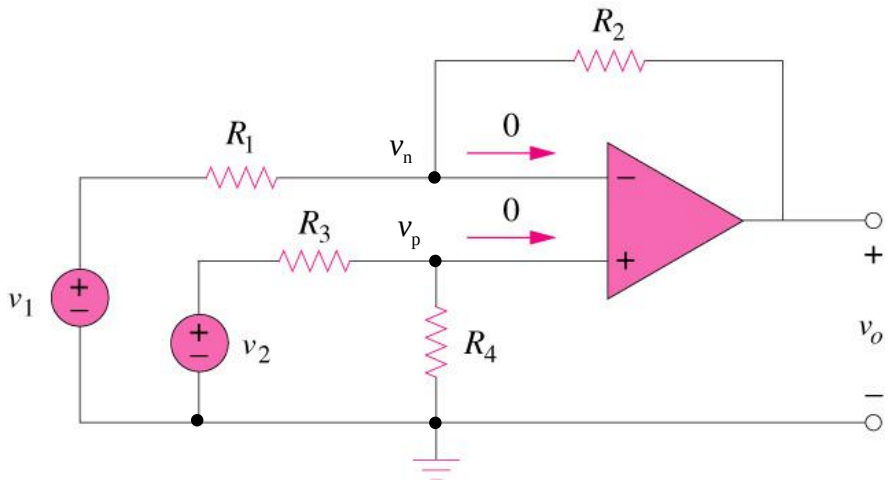

Difference amplifier amplifies the difference between the input voltages but rejects any signal common to the two inputs.

Ideal Analysis:

$$v_p = v_2 \frac{R_4}{R_3 + R_4}$$

$$v_n = v_p$$

Apply nodal analysis at v_n

$$\frac{v_2 \dfrac{R_4}{R_3 + R_4} - v_1}{R_1} + \frac{v_2 \dfrac{R_4}{R_3 + R_4} - v_o}{R_2} = 0$$

$$v_o = \frac{\left(\dfrac{R_2}{R_1} + 1\right)}{\left(\dfrac{R_3}{R_4} + 1\right)} v_2 - v_1 \frac{R_2}{R_1}$$

$$v_o = v_2 - v_1 \text{ , if } \frac{R_2}{R_1} = \frac{R_3}{R_4} = 1$$

Ch5. V. Common Mode Rejection Ratio

$$\text{Common Mode Rejection Ratio} := \left| \frac{\text{Differential Gain}}{\text{Common Mode Gain}} \right|$$

Measuring the CMRR:

Step 1: Measure differential gain:

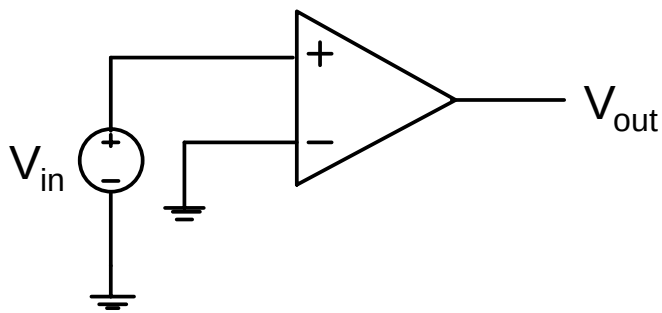

$$A_{diff} = \frac{V_{out}}{V_{in}}$$

Step 2: Measure the common mode gain:

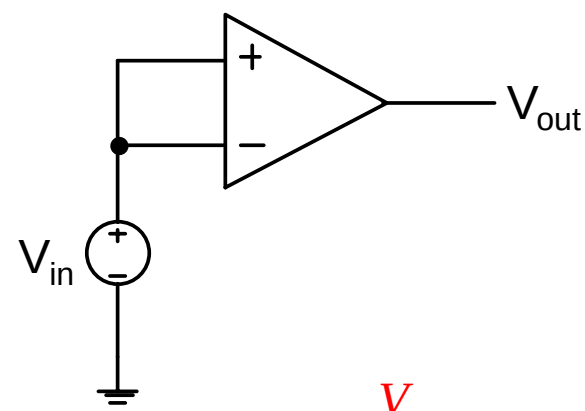

$$A_{cm} = \frac{V_{out}}{V_{in}}$$

$$\text{CMRR} = \left| \frac{A_{diff}}{A_{cm}} \right|$$

Ch5. VI. Example Applications: Classic Instrumentation Amplifier

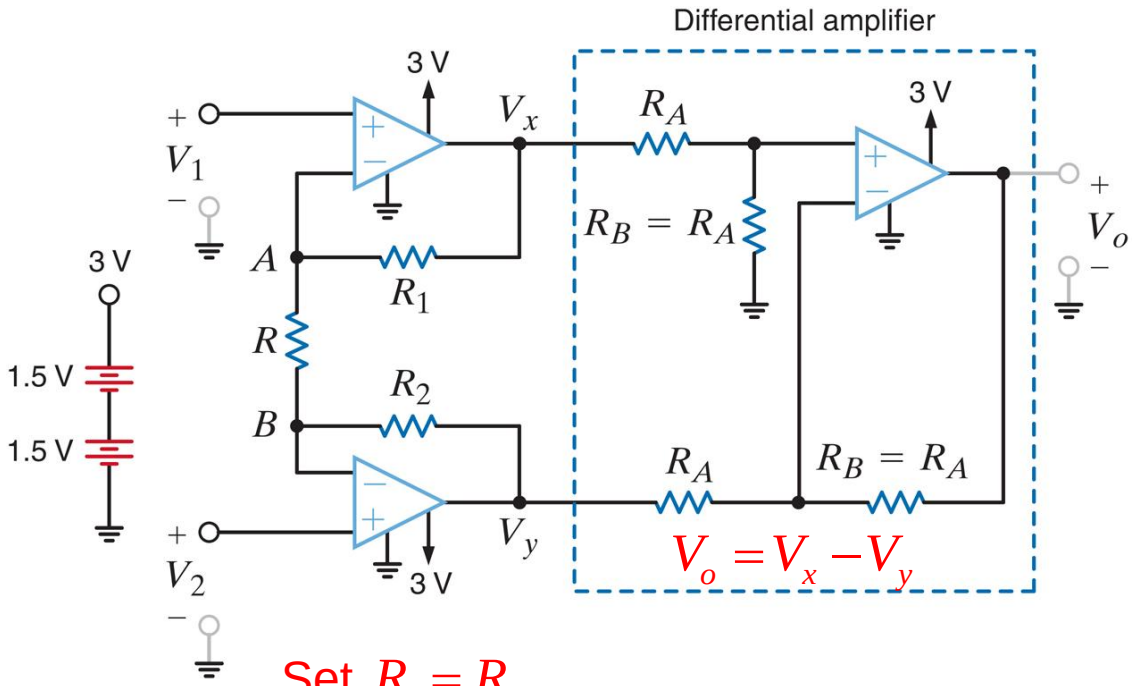

High input resistance

Low power dissipation

Operate from 2 AA batteries

Can use MAX4240 opamp

Set $R_1 = R_2$

$$V_o = \left(1 + \frac{2R_1}{R}\right)(V_1 - V_2)$$

Ch5. VI. Example Applications: Comparator Circuit

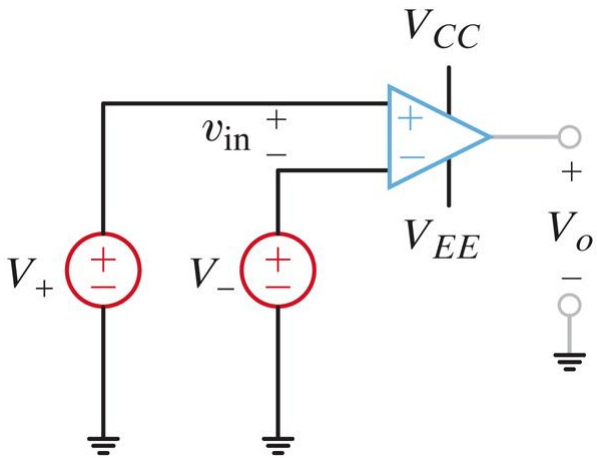

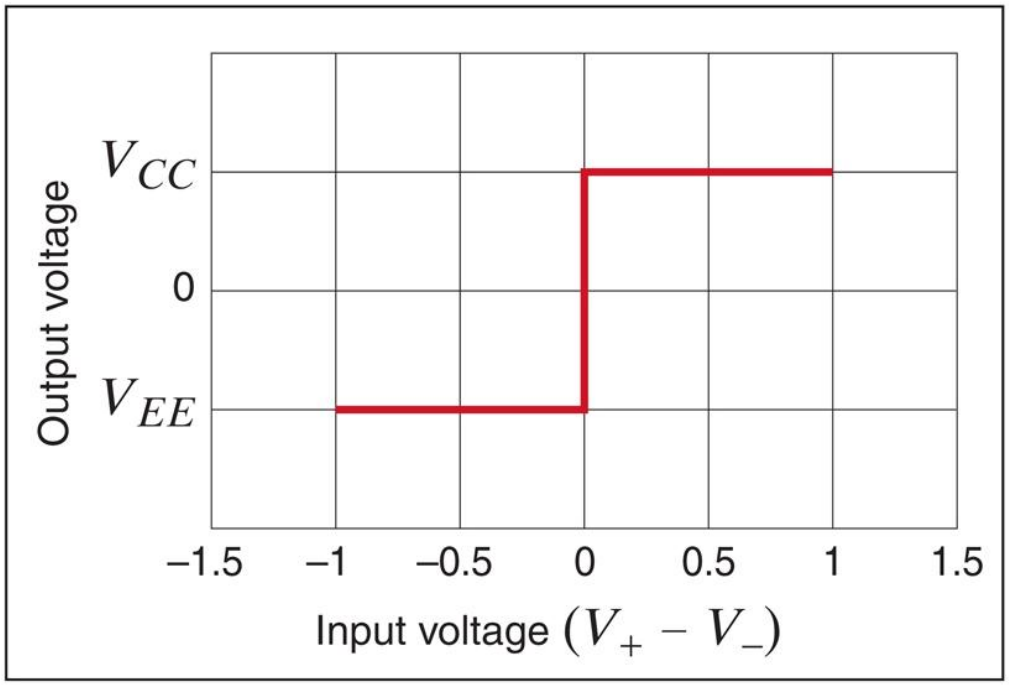

Ch5. VI. Example Applications: Zero-Crossing Comparator Circuit

Some REAL OpAmps require a “pull up resistor.”

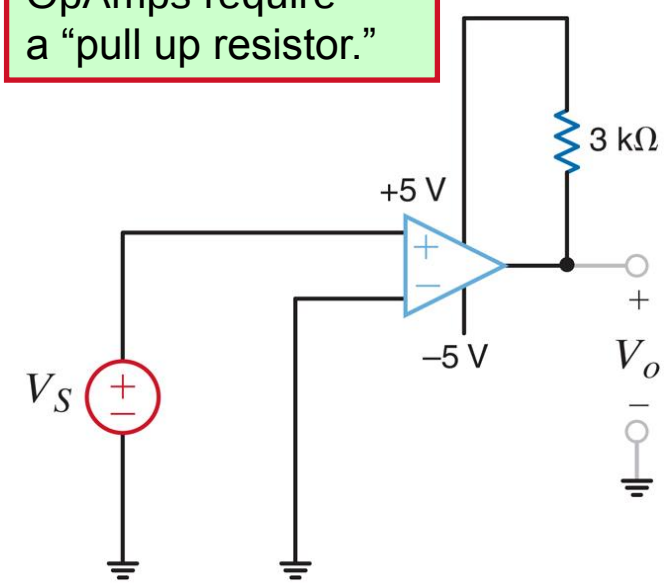

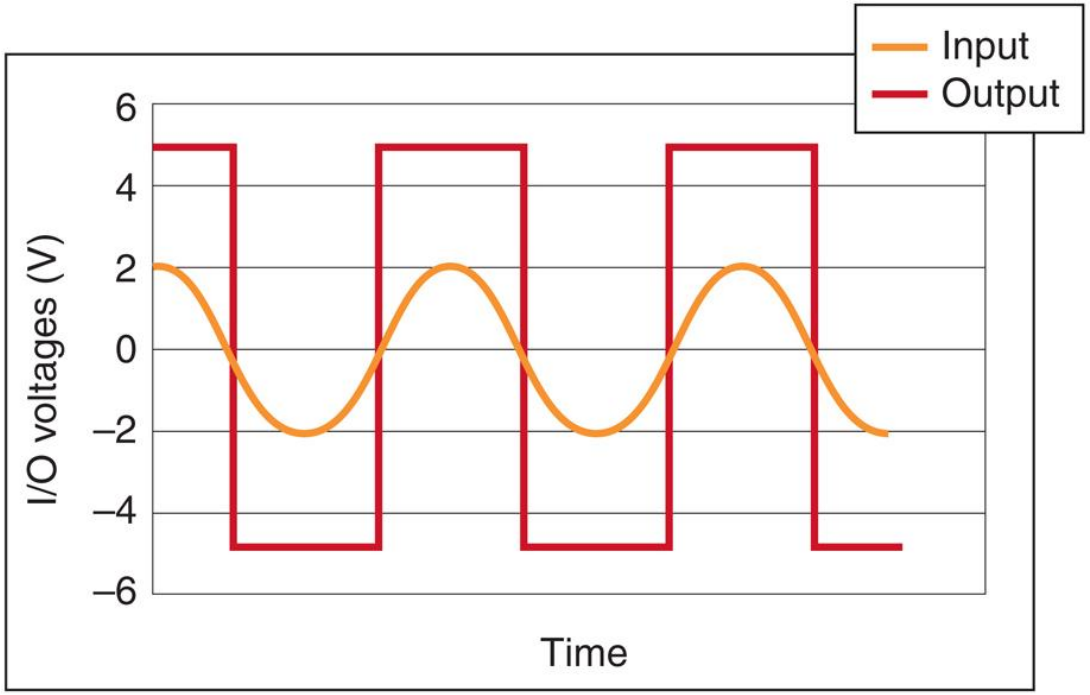

Ch5. VI. Example Applications: Digital to Analogue Comparator Circuit

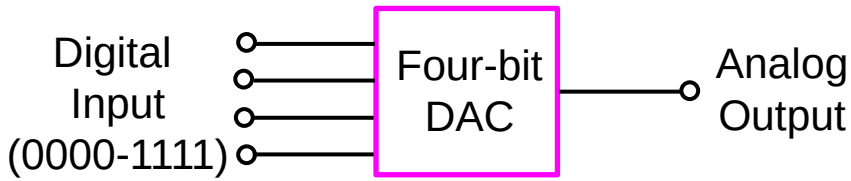

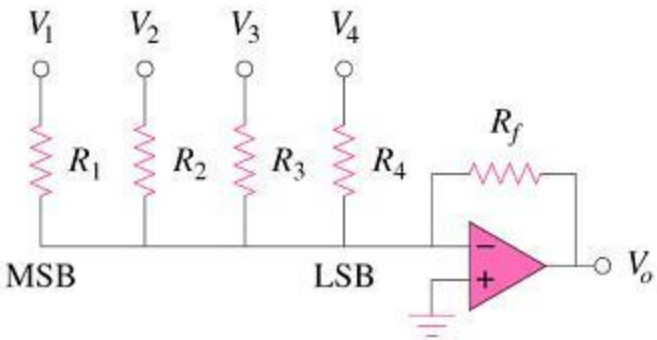

$$-V_0 = \frac{R_f}{R_1}V_1 + \frac{R_f}{R_2}V_2 + \frac{R_f}{R_3}V_3 + \frac{R_f}{R_4}V_4$$

$$R_1 = \frac{R_f}{8},\ R_2 = \frac{R_f}{4},\ R_3 = \frac{R_f}{2},\ R_4 = R_f$$

V_1 to V_4 are either 0 or 1 (unit voltage)

V_1 is the most significant bit.

V_4 is the least significant bit.

Ch6. I. Capacitors

Capacitors are formed when two electrical conductors are separated.

Consider two conductors with +Q of charge on one and –Q charge on the other.

$$V = V_+ - V_- = -\int_-^+ \vec{E} \cdot d\vec{l}$$

Physics tells us that: $Q = CV$

C is referred to as the capacitance and is a geometric quantity because it is determined by the size, shape, and separation of the two conductors.

Ch6. I. Capacitors

Capacitors are formed when two electrical conductors are separated.

We can move charge from one conductor to the other.

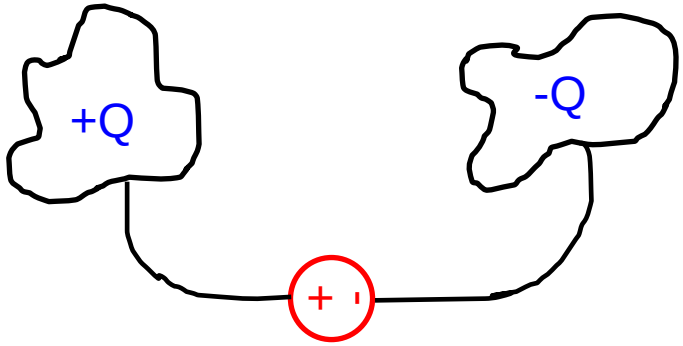

$$Q = CV$$

$$\frac{dQ}{dt} = C\frac{dV}{dt} \Rightarrow I = C\frac{dV}{dt}$$

Equivalent of Ohm's Law

Ch6. II. Capacitor Physics (Physics Review hopefully! – not on exam)

Consider an infinite parallel plate capacitor with charge/area = σ.

$$\frac{Q}{A} = \sigma$$

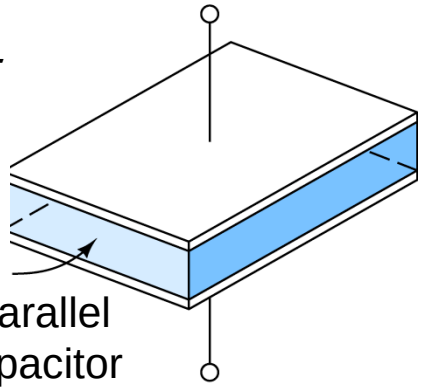

Infinite Parallel Plate Capacitor

There is an electric field between the plates.

$\vec{E}$ is the Electric Field Intensity

$\vec{D} = \varepsilon_r \varepsilon_o \vec{E}$ is the Electric Flux Density

$$\frac{1}{4\pi\varepsilon_o} = 10^{-7} c^2 = 9 \times 10^9 \left[\frac{\text{Volt} \cdot \text{meter}}{\text{Coulomb}} \right]$$

ε_r is dimensionless and depends on the material between the plates.

ε_o is the permittivity of free space.

$$\varepsilon_o = 8.85 \times 10^{-12} \left[\frac{\text{Coulomb}}{\text{Volt} \cdot \text{meter}} \right]$$

Ch6. II. Capacitor Physics (Physics Review hopefully! – not on exam)

Consider an infinite parallel plate capacitor with charge/area = σ.

By symmetry, there is no electric field parallel to the plates because there is nothing unique about any particular direction.

Gauss's Law tells us that the net electric flux through a closed surface is equal to the net enclosed charge.

$$\frac{Q}{A} = \sigma$$

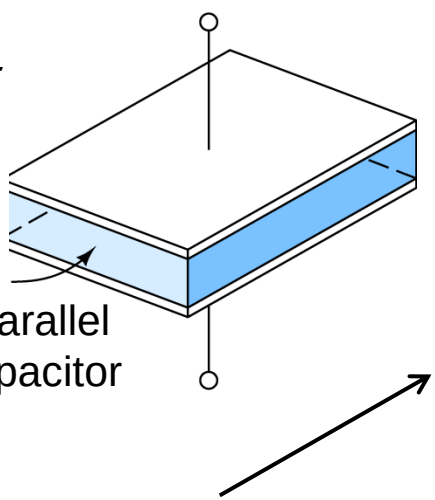

Infinite Parallel Plate Capacitor

This box contains zero net charge. Gauss's law applied to this box tells us there is no electric field outside the parallel plates.

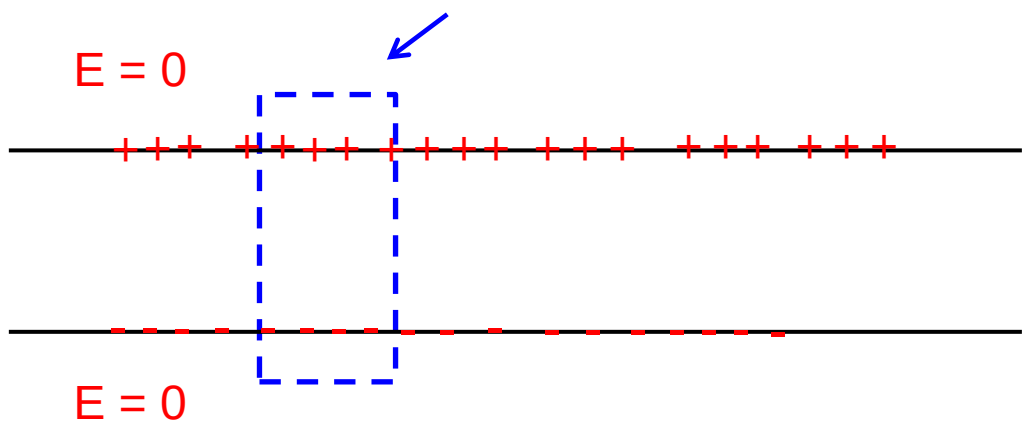

Side-view of parallel plate capacitor.

Ch6. II. Capacitor Physics (Physics Review hopefully! – not on exam)

Consider an infinite parallel plate capacitor with charge/area = Q/A = σ

This box contains net positive charge. Gauss's law applied to this box tells us that: $\varepsilon_o E \cdot A = \sigma \cdot A$

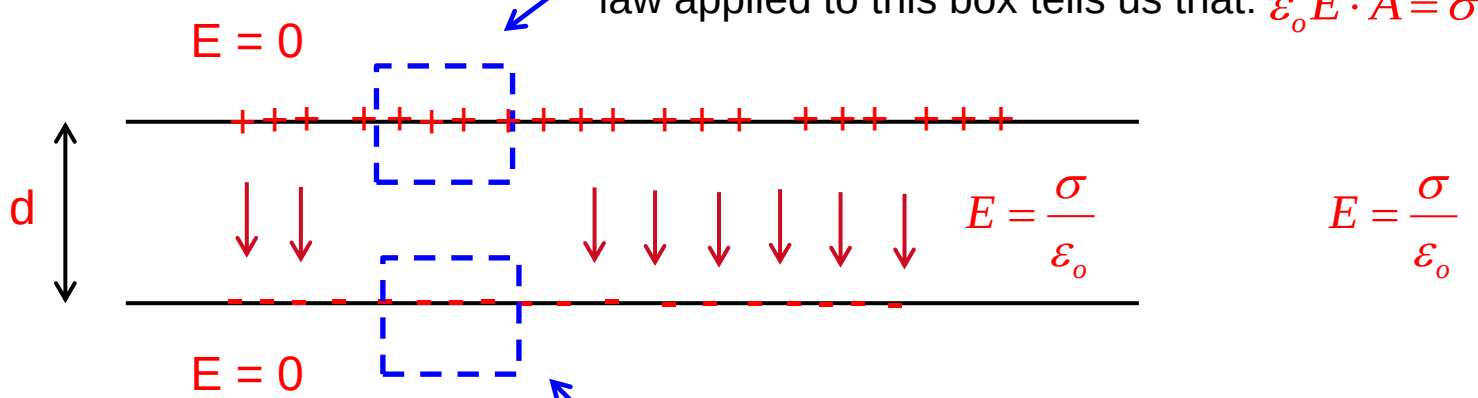

This box contains net negative charge. Gauss's law applied to this box tells us that: $\varepsilon_o E \cdot A = \sigma \cdot A$

$$V = E \cdot d = \frac{\sigma}{\varepsilon_o} \cdot d = \frac{Q}{\varepsilon_o A} \cdot d \quad \Rightarrow \frac{\varepsilon_o A}{d} V = Q$$

Since $Q = CV$ we must have $C = \frac{\varepsilon_o A}{d}$

Ch6. II. Capacitor Physics

Faraday discovers that putting an insulating material between the conducting plates increases the capacitance because polarization charge appears. This insulating material is called a dielectric material.

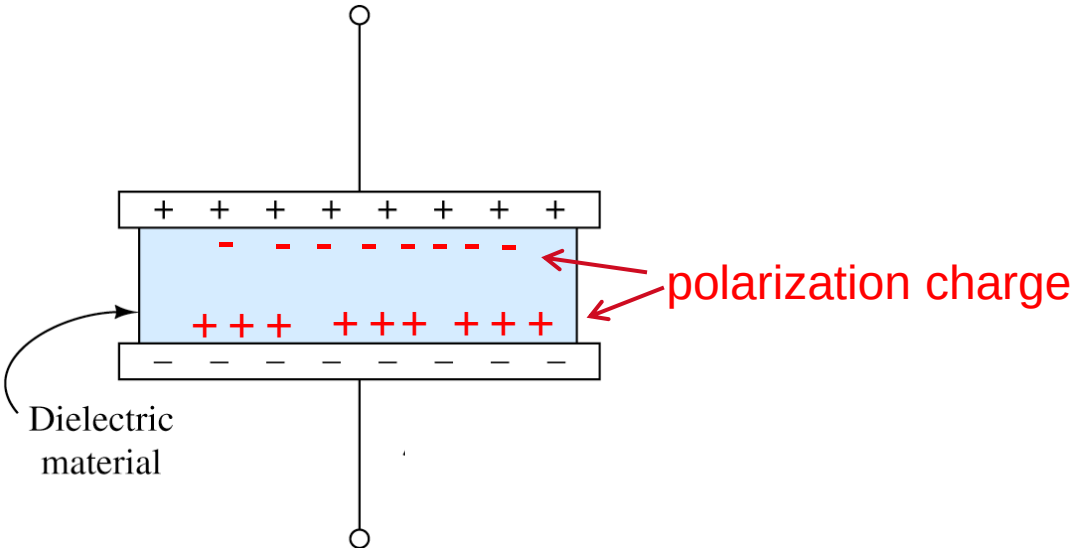

Ch6. II. Capacitor Physics

How much work is done in charging a capacitor ? Consider moving charge from one plate to the other in small increments dQ.

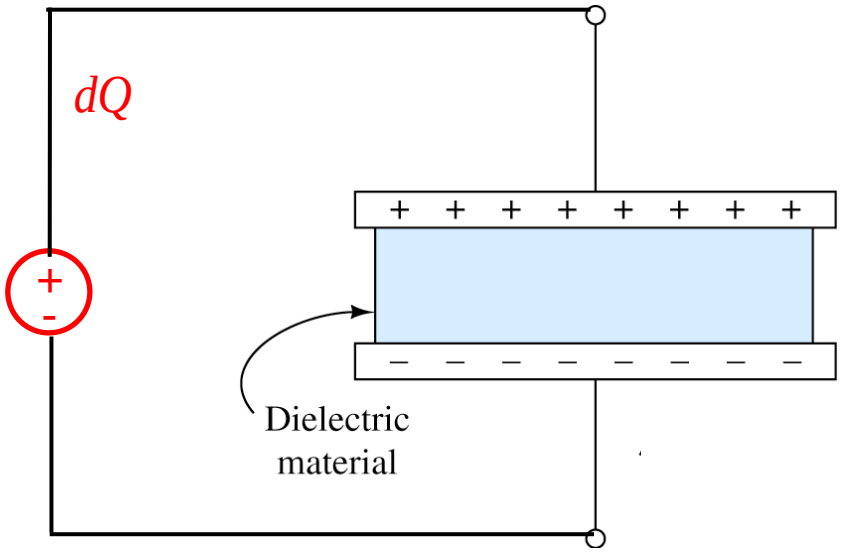

$$dU = VdQ$$ By def. of energy

$$\int_0^U dU' = \int_0^Q VdQ'$$ Sum it up

$$\int_0^U dU' = \int_0^Q \frac{Q'}{C} dQ'$$ V depends on Q

$$U = \frac{1}{2}\frac{Q^2}{C} = \frac{1}{2}CV^2$$ Eval. Integral

Ch6. III. Capacitors - Electrical Viewpoint

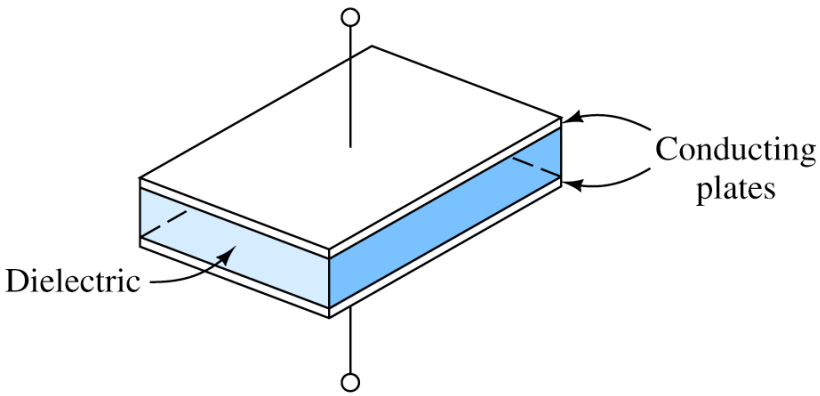

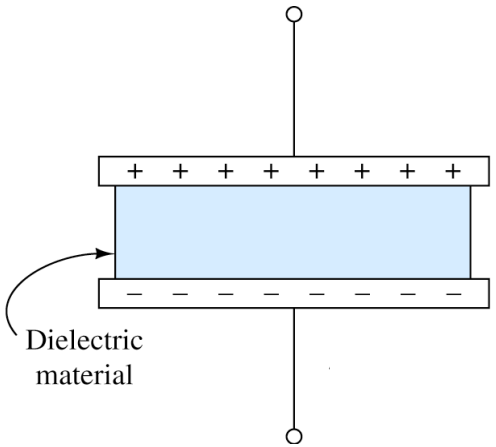

Formal definition: A capacitor is a two-terminal device that consists of two conducting bodies (called plates) that are separated by a nonconducting material (called dielectric). One very simple type, called a parallel-plate capacitor is shown here.

Ch6. III. Capacitors – Electrical Viewpoint

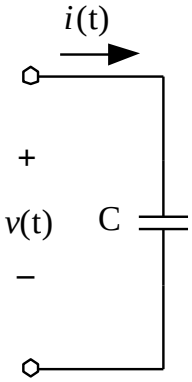

For an ideal capacitor, the stored charge is proportional to the voltage across its plates.

Using the passive sign convention $\boxed{q(t) = C\,v(t)}$

$$\boxed{\Rightarrow i(t) = \frac{dq(t)}{dt} = C\frac{dv(t)}{dt}}$$

The constant of proportionality is the capacitance C. The units of capacitance are C/V, which are called farads (F). Typical capacitance values range from picofarads (pF) to millifarads(mF).

If a capacitor's voltage and current are not in passive sign configuration, (you can mentally flip one of them to get it in the passive configuration).

$$i(t) = -C\frac{dv(t)}{dt}$$

Ch6. III. Capacitors – Electrical Viewpoint

A capacitor is an example of an energy-storage element. The energy in a capacitor is stored in an electric field (and can be extracted later by the circuit, e.g. in an electronic photo flash). Like resistors it is a passive element.

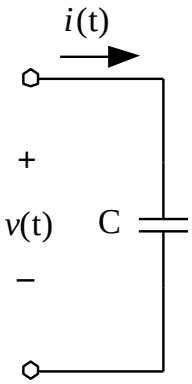

Because of the energy storage, the capacitors have a memory of the past events in the circuit.

"Thinking" analogy to a bucket of water is OK.

Caps store charge

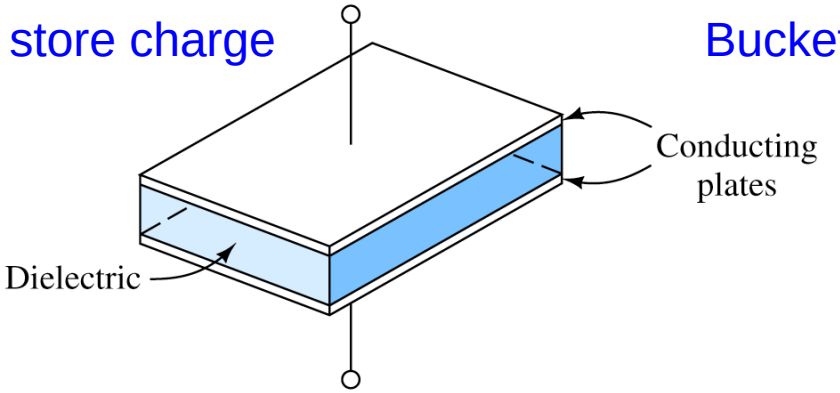

Buckets store water

Ch6. III. Capacitors – Electrical Viewpoint

The capacitance of a capacitor depends on its geometry and the dielectric material used.

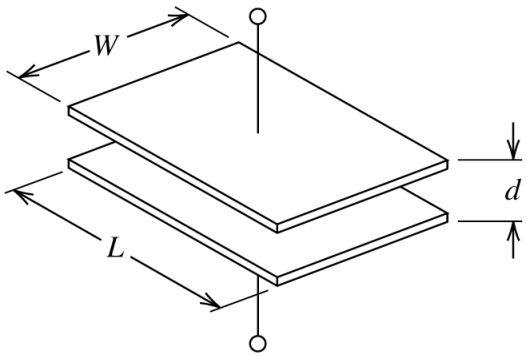

e.g. for a parallel-plate capacitor, if the distance between the plates is much smaller than both the width and the length of the plates, then

$$C = \frac{\varepsilon A}{d} \quad \text{where area } A = W\,L$$

ε is called the dielectric constant of the material. Dielectric constants of the materials are usually given relative (ε_r) to that of vacuum (ε_0).

$$\varepsilon = \varepsilon_r\,\varepsilon_0 \quad \text{where } \varepsilon_0 \approx 8.85 \times 10^{-12}\ \text{F/m}$$

Relative Dielectric Constants (ε_r) for Selected Materials

Vacuum	1.0
Diamond	5.5
Mica	7.0
Polyester	3.4
Quartz	4.3
Water	78.5

Ch6. III. Capacitors – Electrical Viewpoint

Example: Calculate the capacitance given W = 20 cm, L = 10 cm, d = 0.1 mm

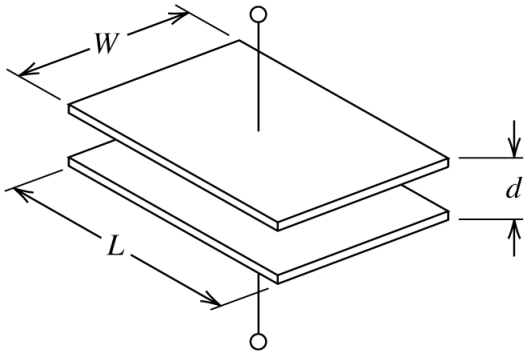

$$A = W\,L = 0.02\ \mathrm{m}^2$$

If dielectric used is air:

$$C_{air} = \frac{\varepsilon_0 A}{d} = \frac{(8.85\times10^{-12})(0.02)}{(0.0001)} = 1.77\ \mathrm{nF}$$

If dielectric used is mica:

$$C_{mica} = \frac{\varepsilon_r \varepsilon_0 A}{d} = \varepsilon_r C_{air} = 12.39\ \mathrm{nF}$$

Relative Dielectric Constants (ε_r) for Selected Materials

Air	1.0
Diamond	5.5
Mica	7.0
Polyester	3.4
Quartz	4.3
Water	78.5

Ch6. III. Capacitors – Electrical Viewpoint

Practical capacitance can be constructed by interleaving the plates with two dielectric layers and rolling them up. By staggering the plates, connection can be made to one plate at each end of the roll.

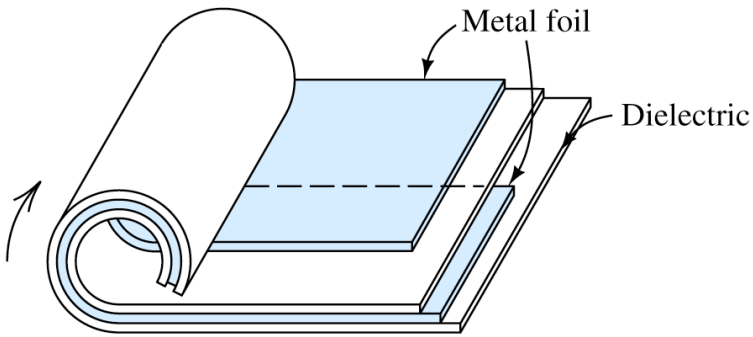

High value compact capacitors, require small d and high ε_r. However the dielectric breaks down for high electric field intensity (which for a given voltage becomes higher for a smaller d). So real capacitors have maximum voltage ratings and there is trade-off between size and voltage rating.

Ch6. III. Capacitors – Electrical Viewpoint

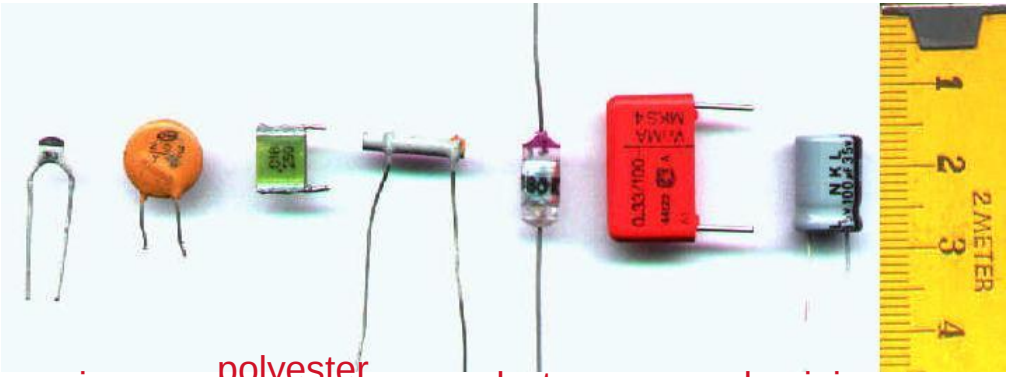

ceramic

ceramic disk

polyester film

tubular ceramic

polystyrene

metalized polyester film

aluminium electrolytic

Ch6. IV. Capacitor – Current/Voltage Examples

Example 1: current through an ideal capacitor for a given voltage (C = 1 μF)

$$i(t) = C\frac{dv(t)}{dt}$$

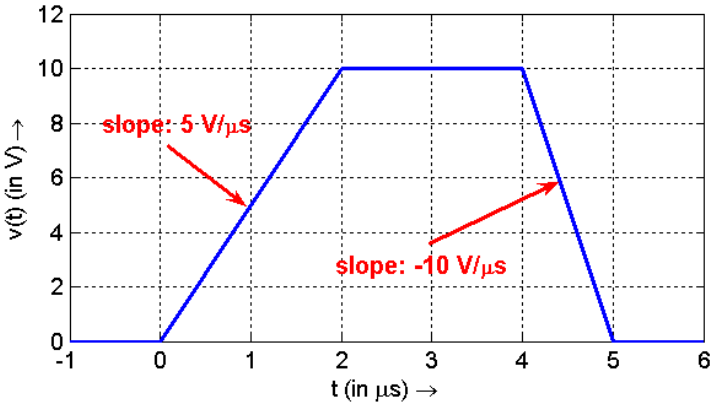

i(t) = 0 when v(t) is constant (e.g. for t < 0 μs, 2 μs < t < 4 μs, and t > 5 μs).

For 0 μs < t < 2 μs: $i(t) = (1\ \frac{\mu C}{V})(5\frac{V}{\mu s}) = 5\ A$

For 4 μs < t < 5 μs: $i(t) = (1\ \frac{\mu C}{V})(-10\frac{V}{\mu s}) = -10\ A$

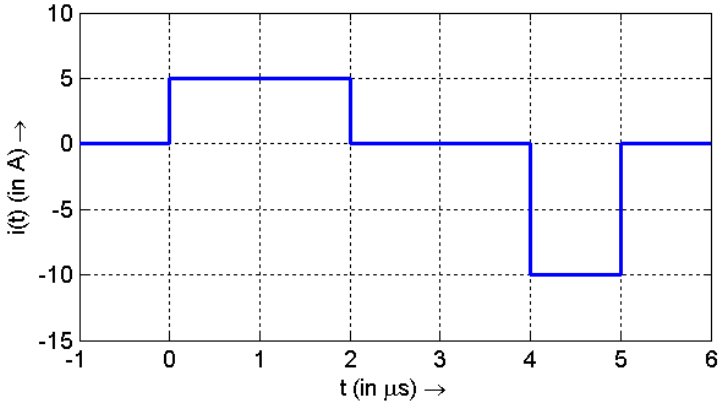

of course $p(t) = v(t)i(t)$

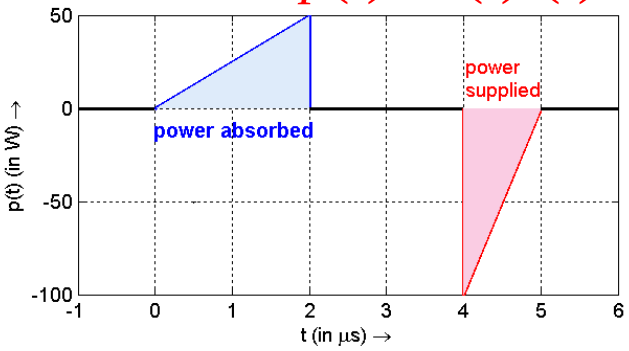

Ch6. IV. Capacitor – Current/Voltage Examples

Example 2: voltage across an ideal capacitor for a given current (C = 0.1 μF)

$$v(t) = \frac{1}{C}\int_{t_0}^{t} i(\tau)\, d\tau + v(t_0)$$

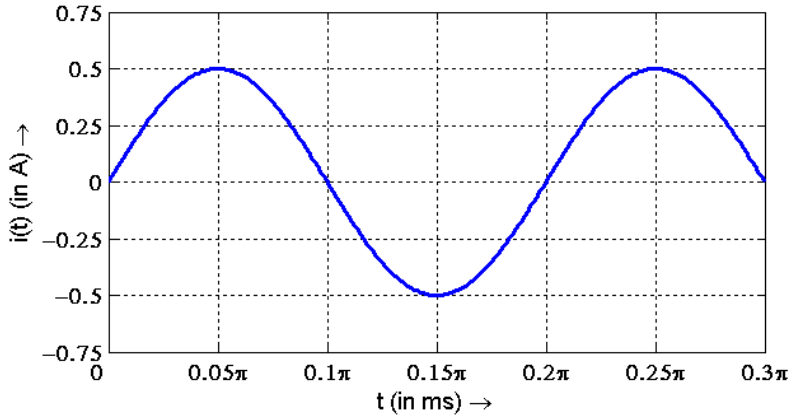

Initial capacitor charge (and thus voltage) is zero, i.e. q(0⁻) = 0 and v(0⁻) = 0.

Given current: $i(t) = 0.5\sin(10^4 t)$ A

$$\Rightarrow v(t) = \frac{1}{10^{-7}}\int_0^t 0.5\sin(10^4\tau)\, d\tau = \left[-\frac{500\cos(10^4\tau)}{\tau}\right]_{\tau=0}^{\tau=t}$$

$$= 500[1-\cos(10^4 t)] \text{ V}$$

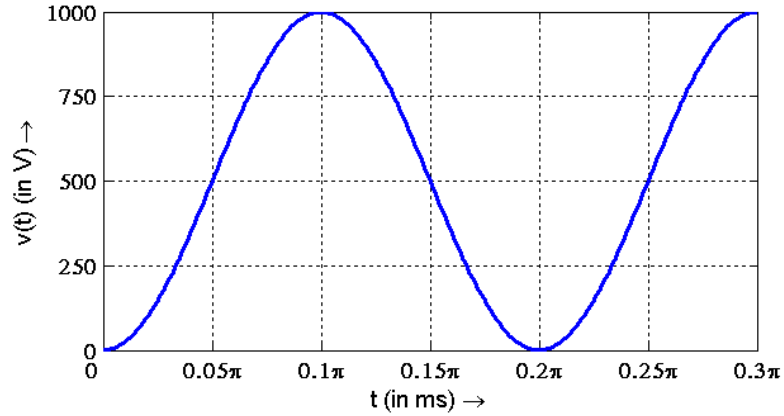

of course $p(t) = v(t)\,i(t)$

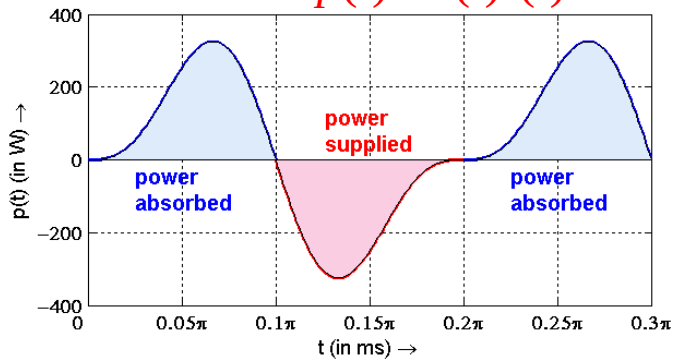

Ch6. V. Capacitor Circuits

$$i(t) = C\frac{dv(t)}{dt} \qquad v(t) = \frac{1}{C}\int_{t_0}^{t} i(\tau)\,d\tau + v(t_0)$$

Two Important Ideas:

(1) Voltage cannot jump (be discontinuous) because it depends on the integration of the current.

(2) The steady-state behaviour of the capacitor is an open-circuit because the derivative of the voltage is zero and there is no current.

Ch6. V. Capacitor Circuits

Consider the circuit shown below: What is the starting and final voltage across the capacitor ? Assume the switch had been closed for a long time.

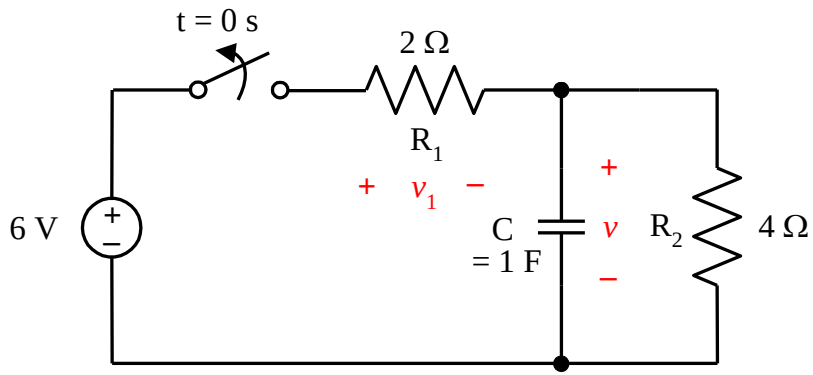

Just prior to the switch opening, the capacitor is open-circuit and the voltage across R_2 is:

$$v(0^-) = \left(\frac{4}{2+4}\right)(6) = 4 \text{ V}$$

Because the capacitor voltage can't change instantaneously: $v(0^+) = v(0^-) = 4 \text{ V}$

Ch6. V. Capacitor Circuits

Consider the circuit shown below: What is the starting and final voltage ?

Assume the switch has been closed for a long time.

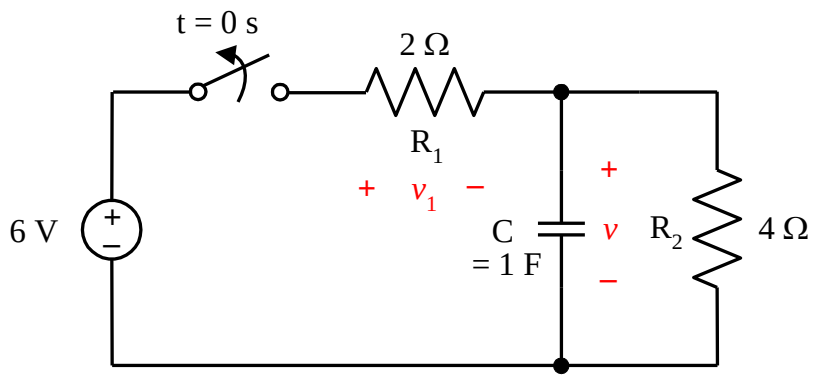

The energy stored on the capacitor at t = 0 s: $w(0) = \frac{1}{2} C v^2(0) = \frac{1}{2} 1(4)^2 = 8 \text{ J}$

This energy is dissipated through R_2 over a period of time after the switch is opened.

$$v(\infty) = 0 \text{ V}$$

In the next chapter we learn the transient response of the capacitor during charging and discharging

Ch6. V. Capacitor Circuits

Consider the parallel combination of capacitors.

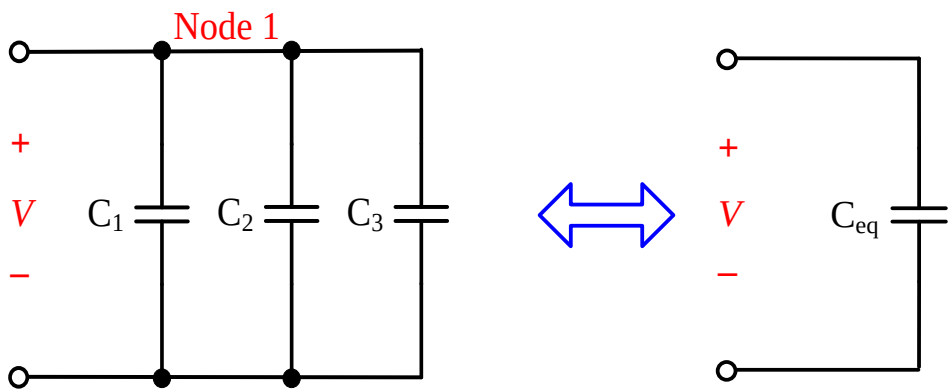

With capacitors, it is good to be able to think in terms of charge.

$$Q_1 = C_1 V \quad Q_2 = C_2 V \quad Q_3 = C_3 V$$

$$Q_{\text{Total}} = (C_1 + C_2 + C_3)V$$

$$Q_{\text{Total}} = C_{\text{eq}} V \quad C_{\text{eq}} = C_1 + C_2 + C_3$$

Observe that:

$$Q_1 = C_1 V = \frac{C_1}{C_1 + C_2 + C_3} Q_{\text{Total}} \quad Q_2 = C_2 V = \frac{C_2}{C_1 + C_2 + C_3} Q_{\text{Total}} \quad Q_3 = C_3 V = \frac{C_3}{C_1 + C_2 + C_3} Q_{\text{Total}}$$

Capacitors in parallel provide: Charge Division

Capacitors in parallel add like resistors in series.

For N capacitors in parallel: $C_{eq} = C_1 + C_2 + \cdots + C_N$

Ch6. V. Capacitor Circuits

Consider the series combination of capacitors.

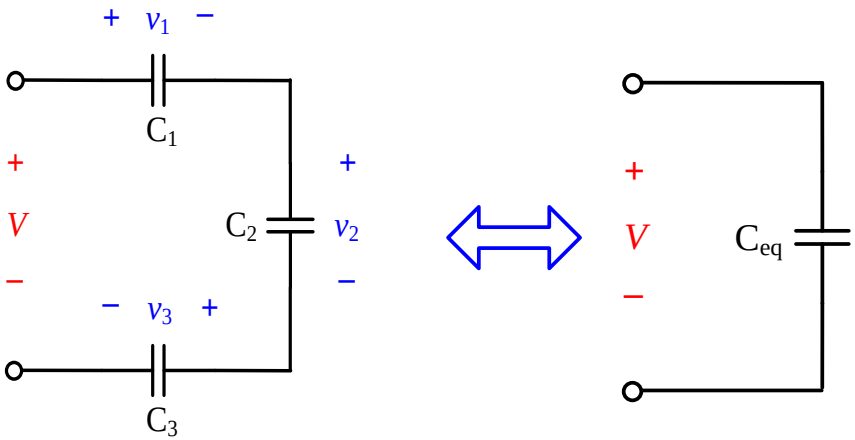

$$V_1 + V_2 + V_3 = V$$

$$\frac{Q}{C_1} + \frac{Q}{C_2} + \frac{Q}{C_3} = Q\left(\frac{1}{C_1} + \frac{1}{C_2} + \frac{1}{C_3}\right) = V$$

$$QC_{eq} = V \quad C_{eq} = \left(\frac{1}{C_1} + \frac{1}{C_2} + \frac{1}{C_3}\right)^{-1} = C_1 \parallel C_2 \parallel C_3$$

How is the voltage V divided among the capacitors ?

With capacitors, it is good to be able to think in terms of charge.

What is the charge on C_1 , C_2 , and C_3 ?

The critical observation is that whatever charge is put on the top plate of C_1, it must come from the bottom place of C_3 .

Thus, the charge on all capacitors must be the same !

Capacitors in series perform voltage addition and add like resistors in parallel.

For N capacitors in series: $C_{eq} = \left(\frac{1}{C_1} + \frac{1}{C_2} + \cdots + \frac{1}{C_N}\right)^{-1}$

Ch6. V. Capacitor Circuits

Consider the series combination of capacitors.

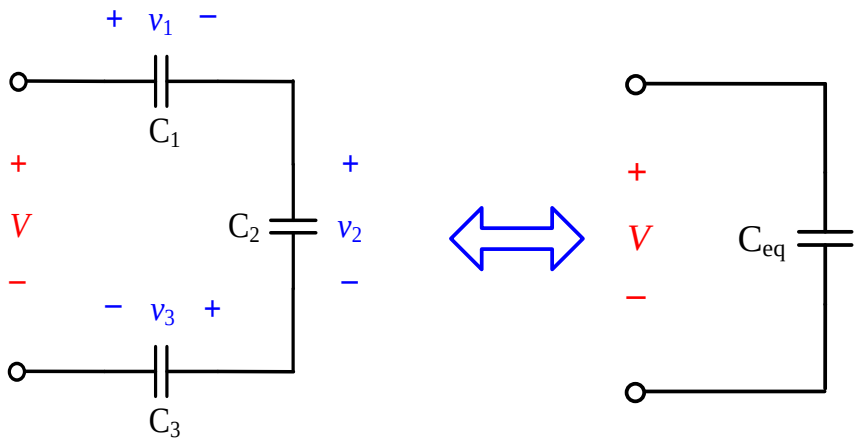

$$V_1 + V_2 + V_3 = V$$

$$\frac{Q}{C_1} + \frac{Q}{C_2} + \frac{Q}{C_3} = Q\left(\frac{1}{C_1} + \frac{1}{C_2} + \frac{1}{C_3}\right) = V$$

$$V_1 = V\frac{\frac{1}{C_1}}{\frac{1}{C_1} + \frac{1}{C_2} + \frac{1}{C_3}} \qquad V_2 = V\frac{\frac{1}{C_2}}{\frac{1}{C_1} + \frac{1}{C_2} + \frac{1}{C_3}} \qquad V_3 = V\frac{\frac{1}{C_3}}{\frac{1}{C_1} + \frac{1}{C_2} + \frac{1}{C_3}}$$

Capacitors in series perform voltage division. Be careful, have to use $\frac{1}{C}$

Ch6. V. Capacitor Circuits

What is $V_1(t=\infty)$ and $V_2(t=\infty)$?

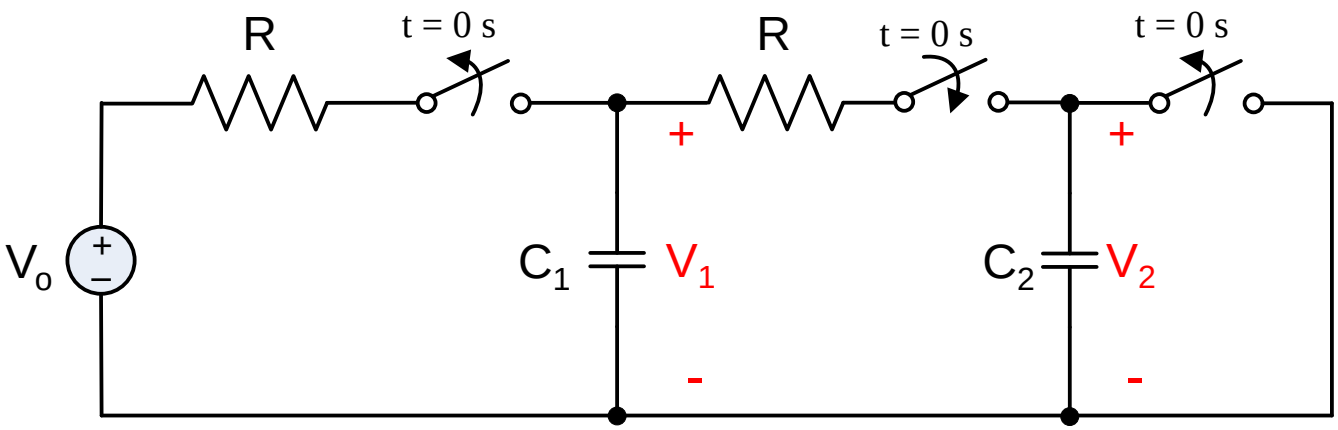

Ch6. V. Capacitor Circuits

What is $V_1(t=\infty)$ and $V_2(t=\infty)$?

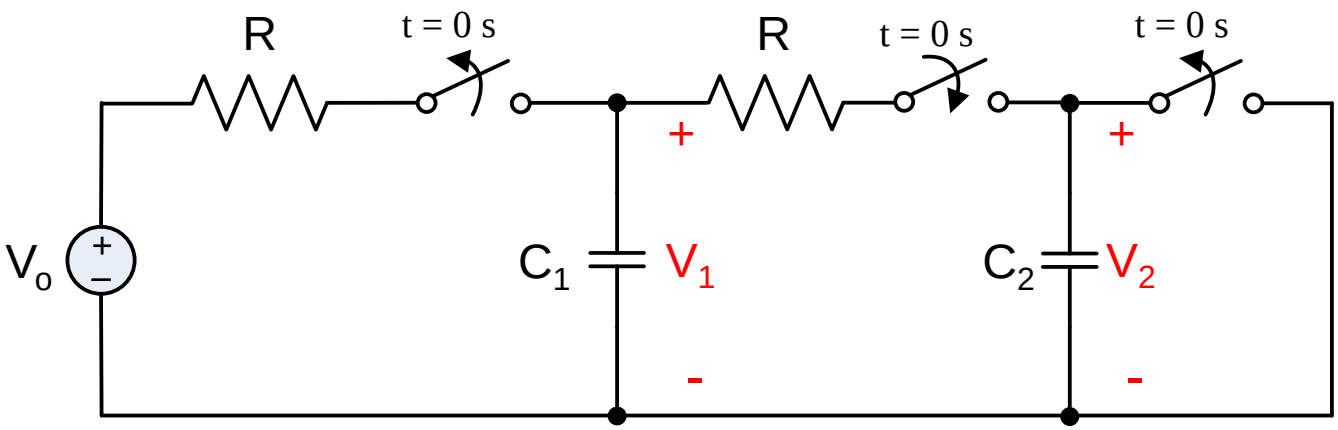

$Q = C_1 V_o$ of charge must be shared between C_1 and C_2. The two caps are effectively connected in parallel and there is charge division.

$$Q_1 = \frac{C_1}{C_1 + C_2} Q \quad \text{and} \quad Q_2 = \frac{C_2}{C_1 + C_2} Q$$

Thus $$V_1(t=\infty) = V_2(t=\infty) = \frac{C_1}{C_1 + C_2} V_o$$

Ch6. V. Capacitor Circuits

Find the equivalent capacitance.

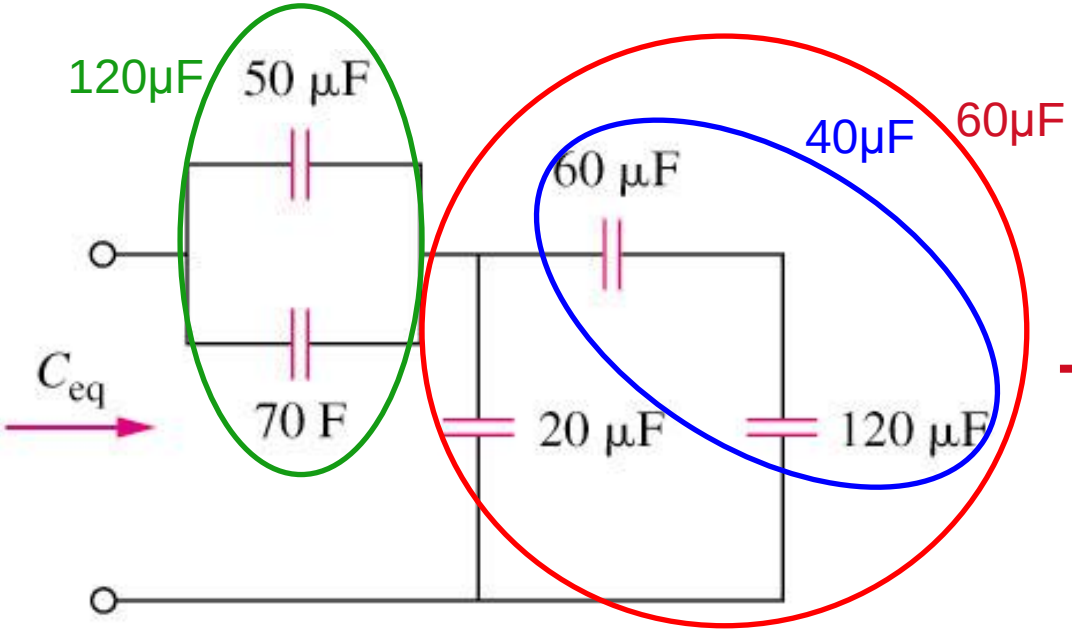

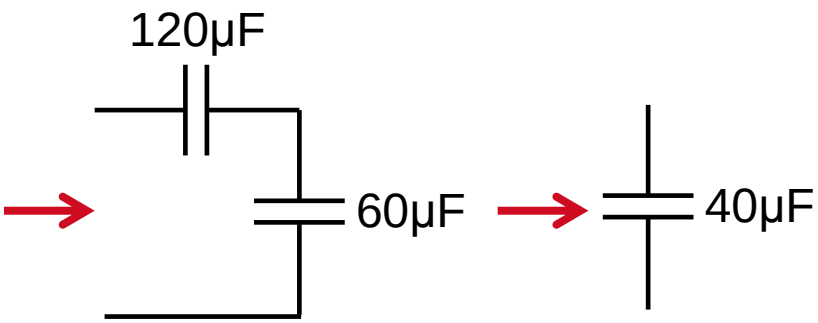

C_{eq} = 40μF

Ch6. V. Capacitor Circuits

Find the voltage across each capacitor.

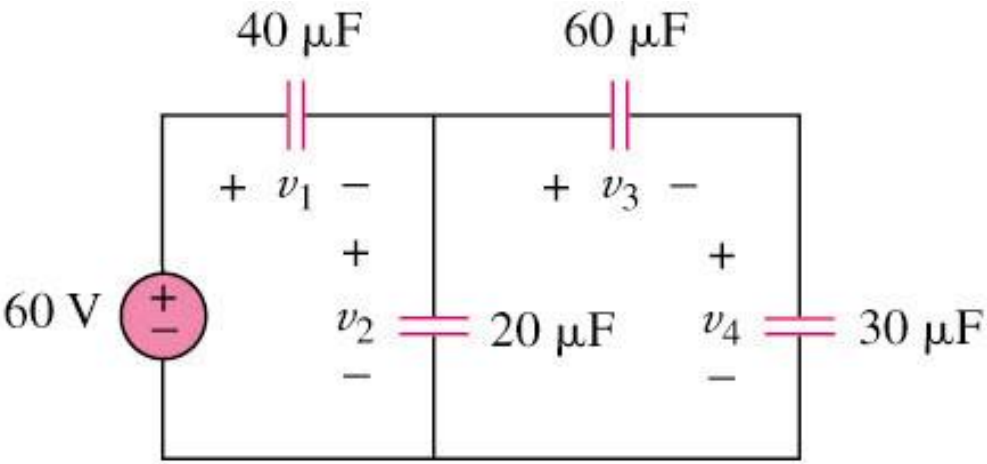

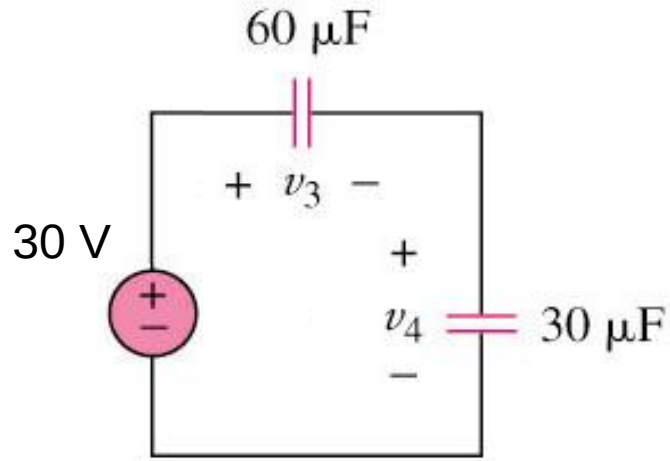

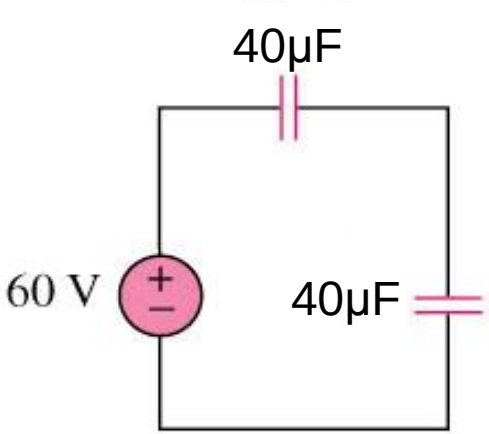

v_1 =30 V

v_2 =30 V

$$v_3 = 30\frac{\frac{1}{60}}{\frac{1}{60}+\frac{1}{30}} = 30\frac{30}{90} = 30\cdot\frac{1}{3} = 10$$

$$v_4 = 30\frac{\frac{1}{30}}{\frac{1}{60}+\frac{1}{30}} = 30\frac{60}{90} = 30\cdot\frac{2}{3} = 20$$

v_3 =10 V

v_4 =20 V

Ch6. VI. Inductors – Physics (hopefully review)

In order to understand inductors, we need to understand magnetism.

Oersted's Experiment: In 1820, Hans Christian Oersted (1777-1851) used a compass to discover that a current produces magnetic fields that circle around the current wire.

$\vec{H}$ is used to represent the magnetic field intensity

Ch6. VI. Inductors - Physics

Jean Baptiste Biot (1774-1862) and Felix Savart (1791-1841) discover the law below:

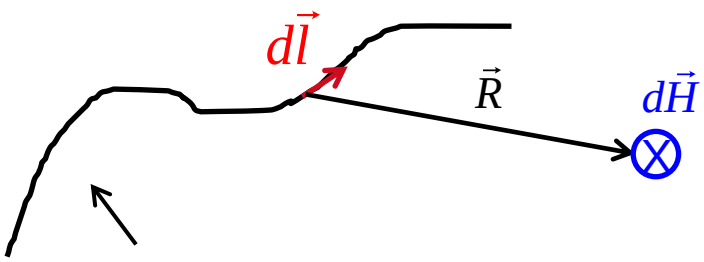

A wire carrying current

Vector cross product

$$d\vec{H} = \frac{Id\vec{l} \times \vec{R}}{4\pi R^2} \qquad \vec{H} = \int \frac{Id\vec{l} \times \vec{R}}{4\pi R^2}$$

$\vec{H}$ has units of $\left[\frac{\mathrm{A}}{\mathrm{m}}\right]$

Ch6. VI. Inductors - Physics

Andre-Marie Ampere expressed the Biot-Savart law more beautifully:

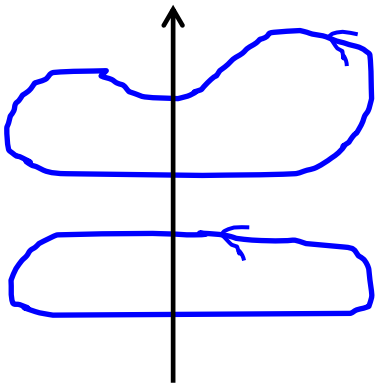

Amperian closed paths around the current.

$$\oint \vec{H} \cdot d\vec{l} = I_{\text{enclosed}}$$

Ch6. VI. Inductors - Physics

Relationship of Magnetic Field Intensity and Magnetic Flux Density:

$\vec{B} = \mu_r \mu_o \vec{H}$ is the magnetic flux density.

$\mu_o = 4\pi \times 10^{-7} \left[\frac{\mathrm{N}}{\mathrm{A}^2} \right]$ μ_o is the permeability of free space

μ_r depends on the material in which the magnetic field resides.

Units of $\vec{B}$ are $\left[\frac{\mathrm{N}}{\mathrm{A} \cdot \mathrm{m}} = \frac{\mathrm{Weber}}{\mathrm{m}^2} = \mathrm{Tesla} \right]$

Ch6. VI. Inductors - Physics

Ampere explained the force between current carrying wires:

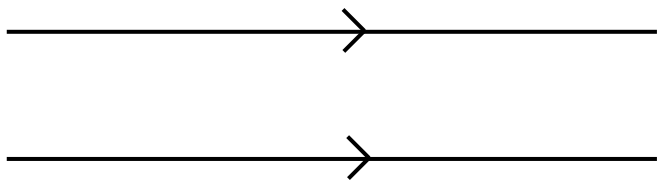

Why does ‘like charge’ repel, but moving ‘like charge’ attract ?

Both Electric Fields and Magnetic Fields exert force on electric charge:

vector cross product

Lorentz Force law: $F = q\left(\vec{E} + \vec{v} \times \vec{B}\right)$

The currents create a magnetic field and the magnetic field exerts a force on the moving charge.

Ch6. VI. Inductors - Physics

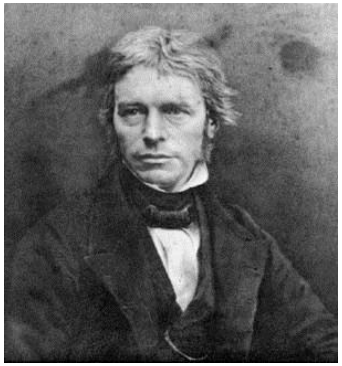

Michael Faraday (1791-1867) answered the question: If a current produces a magnetic field, can a magnetic field produce a current?

We first introduce the concept of “flux linkage”.

First, consider a loop of current. There is magnetic flux through the loop.

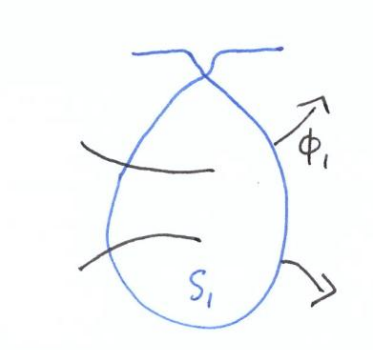

$$\phi_1 = \int_{S_1} \vec{B} \cdot d\vec{S}$$

Consider two loops of current. Each loop generates magnetic flux.

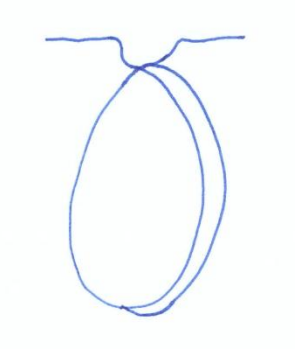

Total flux is $2\phi_1$

Units of ϕ_1 is Weber.

Ch6. VI. Inductors - Physics

Definition of Flux Linkage: It is the total flux passing through the surface bounded by the total contour of the coil carrying current.

The flux linkage is the number of loops multiplied by the flux linking them.

Flux Linkage: λ

One loop

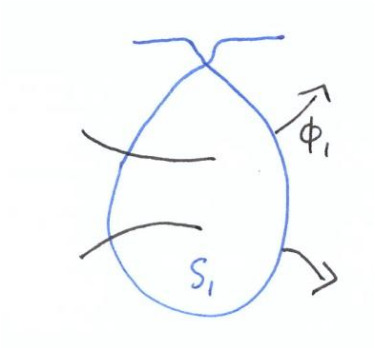

$$\lambda = \phi_1$$

Two loops

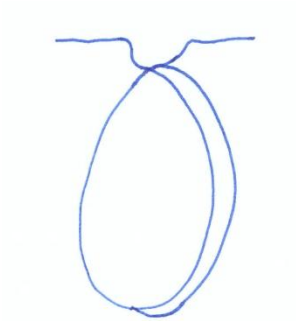

$$\lambda = 2 \cdot 2\phi_1 = 4\phi_1$$

N loops

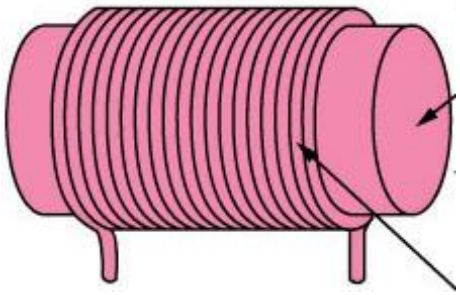

$$\lambda = N \cdot N\phi_1 = N^2\phi_1$$

Ch6. VI. Inductors - Physics

Calculating the Flux Linkage for an infinite solenoid using Ampere's Law:

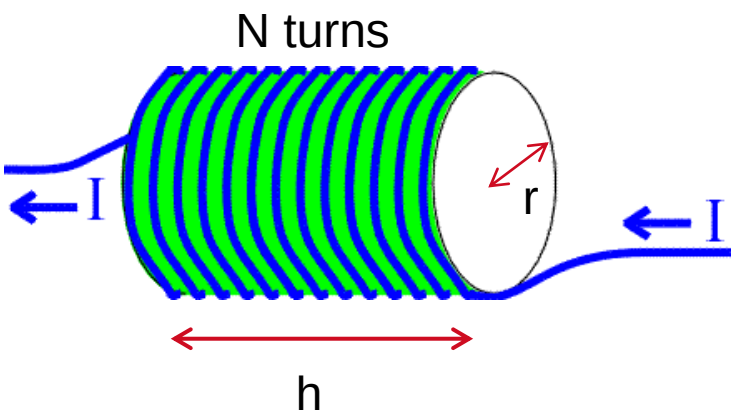

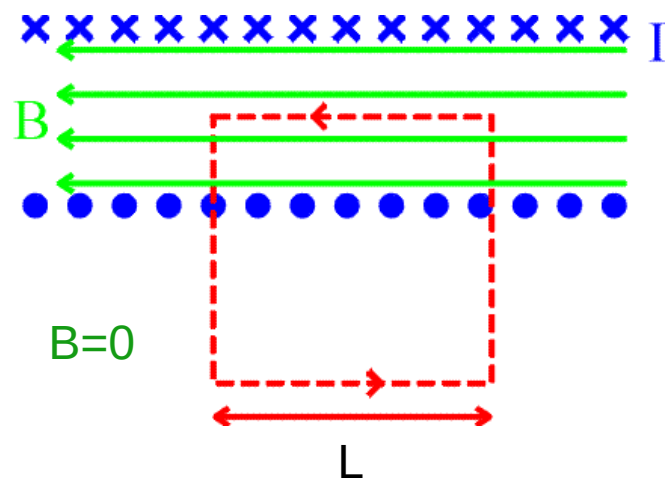

$$BL = \mu_r \mu_o \frac{N}{h} LI \Rightarrow B = \mu_r \mu_o \frac{N}{h} I$$

Ampere's Law

$$\phi = B\pi r^2 = \mu_r \mu_o \frac{N}{h} \pi r^2 I$$

Flux density, B, times the area is the flux, ϕ

$$\lambda = N\phi = \mu_r \mu_o \frac{N^2}{h} \pi r^2 I$$

Flux Linkage accounts for the flux through all loops. It is always a function of N^2.

Ch6. VII. Inductors – Electrical Viewpoint

We see that for an ideal coil of wire, we have: $\lambda = N\phi = \mu_r \mu_o \frac{N^2}{h} \pi r^2 I$

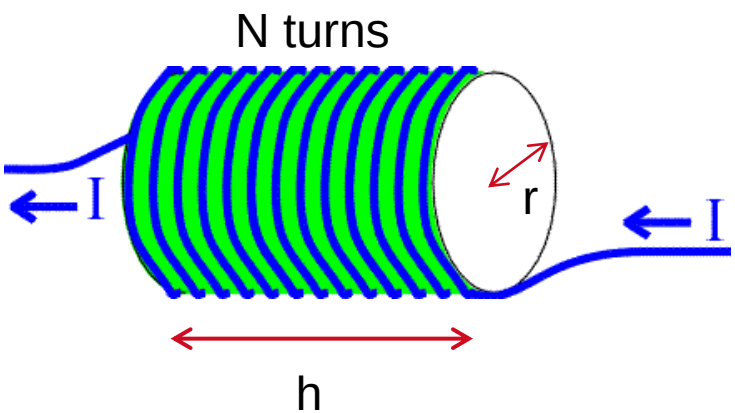

The flux linkage is directly proportional to the current. The constant of proportionality that relates the flux linkage to the current is called the inductance, L.

$$L = \mu_r \mu_o \frac{N^2}{h} \pi r^2$$

The fundamental law for a coil, or inductor, is: $\lambda = LI$

The units of inductance are $\frac{\text{Weber}}{\text{Ampere}}$ which are referred to as Henrys (H).

Note that the inductance is proportional to the area of the coil and inversely proportional to the length of the coil (keeping the N turns fixed).

Ch6. VII. Inductors – Electrical Viewpoint

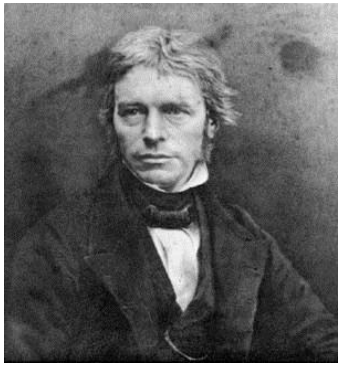

Michael Faraday moves a magnet into a coil of wire and measures an induced voltage.

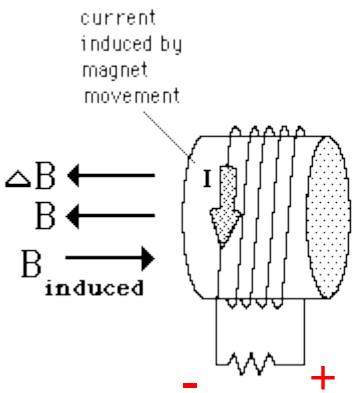

Magnetic approaching coil

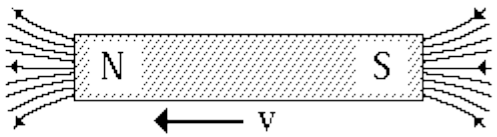

Physics tells us that the induced voltage is equal to the derivative of the flux linkage. Note the sign of V depends on the reference polarity.

$$V_{\text{emf}} = \frac{d\lambda}{dt}$$

Emf stands for electromotive force

Ch6. VII. Inductors – Electrical Viewpoint

The correct way to 'think' about Faraday's law and the electromotive force is that it is a 'kick-back' voltage that opposes the change in the magnetic field in the coil. This is known as Lenz's principle.

$$V_{\text{emf}} = \frac{d\lambda}{dt}$$

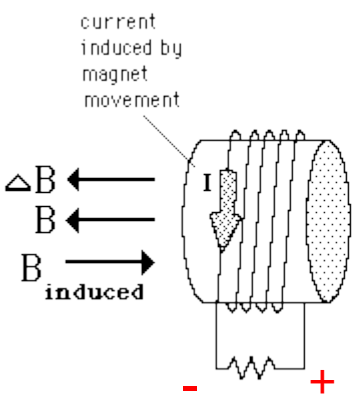

Magnetic approaching coil

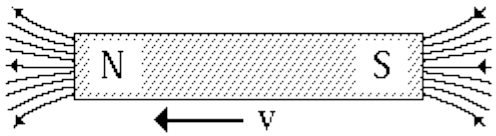

The induced voltage creates a current opposing the magnetic field of approaching magnet.

Ch6. VII. Inductors – Electrical Viewpoint

Faraday's 'kick-back' voltage: $V_{\text{emf}} = \dfrac{d\lambda}{dt}$

Faraday kick-back voltage trying to push the current back out.

Applied voltage trying to push current into the coil.

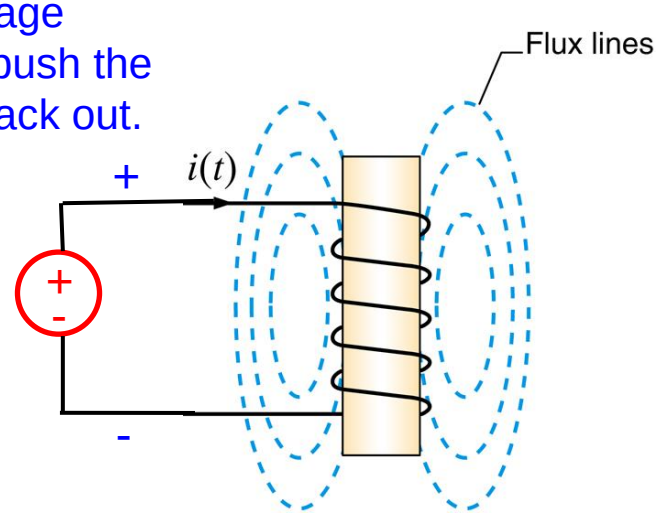

Ch6. VII. Inductors – Electrical Viewpoint

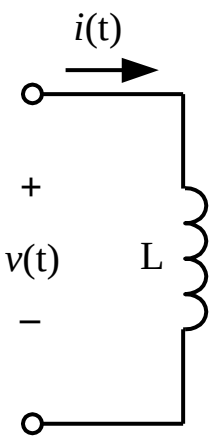

Starting with: $\lambda = LI$

we take the derivative, and using passive sign convention we obtain the equivalent of Ohm's law for the inductor:

$$\frac{d\lambda}{dt} = V = L\frac{dI}{dt}$$

Ch6. VII. Inductors – Electrical VIewpoint

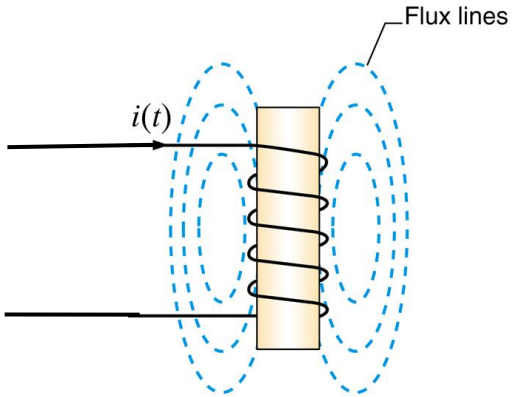

What is the magnetic energy stored in a coil ?

Current is the flow of charge: I = dQ/dt. Each increment of charge dQ carries an energy increment dW = VdQ into the coil that fights the kick-back voltage. The total energy stored in the coil is:

$$W = \int VdQ = \int_0^T VIdt = \int_0^T L\frac{dI}{dt}Idt = L\int_0^I I'dI' = \frac{1}{2}LI^2 = \frac{1}{2}\frac{\lambda^2}{L}$$

Ch6. VII. Inductors = Electrical Viewpoint

$$v(t) = L\frac{di(t)}{dt} \qquad i(t) = \frac{1}{L}\int_{t_0}^{t} v(\tau)\,d\tau + i(t_0)$$

Two Important Ideas:

(1) Current cannot jump (be discontinuous) because it depends on the integration of the voltage.

(2) The steady-state behaviour of the inductor is a short-circuit because the derivative of the current is zero and the voltage drop is zero.

Ch6. VII. Inductors – Electrical Viewpoint

Inductors are a two terminal device that consists of a coil of wire (often wound around a core).

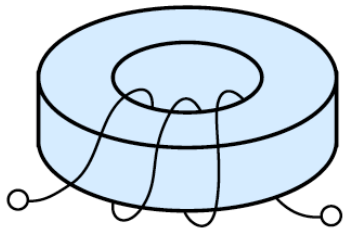

(a) Toriodal inductor

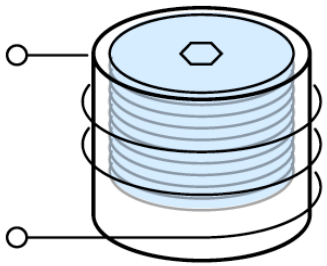

(b) Coil with an iron-oxide slug that can be screwed in or out to adjust the inductance

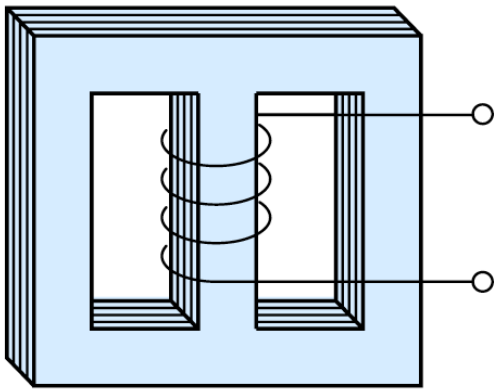

(c) Inductor with a laminated iron core

Ch6. VII. Inductors – Electrical Viewpoint

Inductors are a two terminal device that consists of a coil of wire (often wound around a core).

Ch6. VII. Inductors – Electrical Viewpoint

The current flowing through the inductor creates a magnetic field or flux that links the coil.

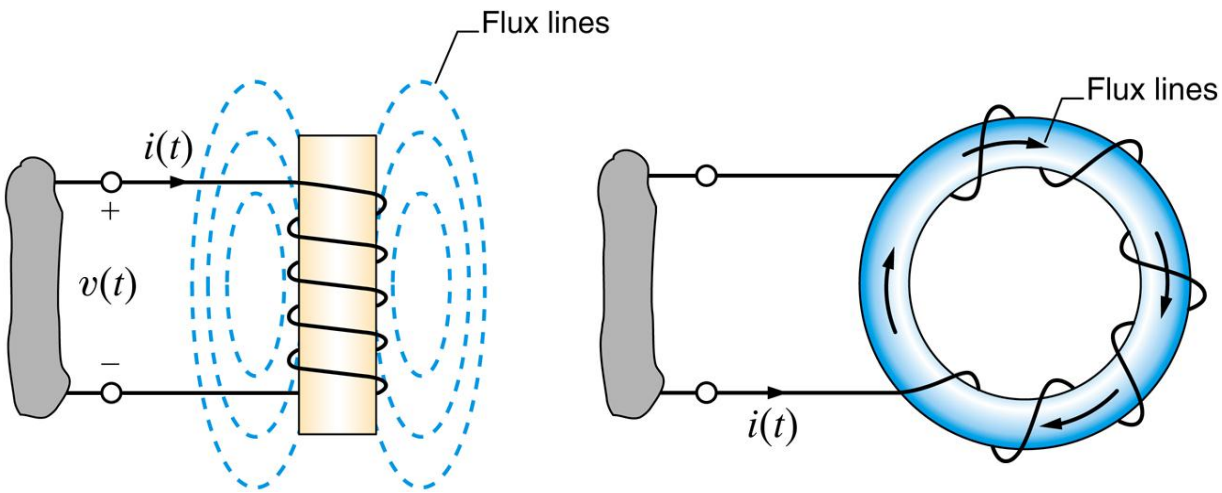

Ch6. VII. Inductors – Electrical Viewpoint

The core helps in concentrating the magnetic flux. The permeability of the core determines how well it concentrates the magnetic flux. Permeability of the materials are usually given relative (μ_r) to that of air (μ_0).

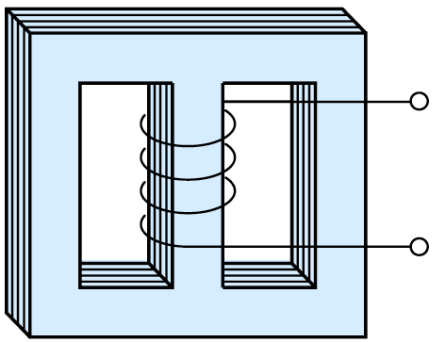

(c) Inductor with a laminated iron core

The inductor is an energy storage element. The energy is stored in the magnetic field. Like resistors and capacitors it is a passive circuit element.

Because the inductor stores magnetic energy, it has memory of past events in the circuit.

Ch6. VIII. Inductor Circuits

Consider the circuit shown below. What is the starting and final current in the inductor?

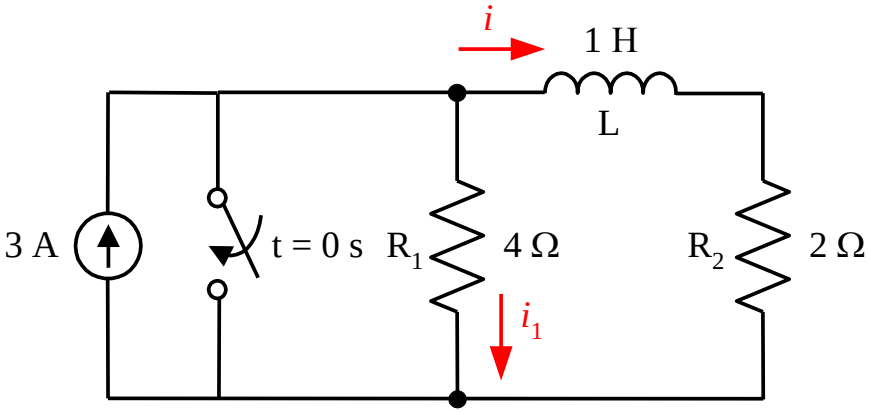

Assume the switch had been open for a long time.

When the switch was open, the steady-state behaviour of the inductor is a short-circuit. Thus:

$$i(0^-) = \left(\frac{\frac{1}{2}}{\frac{1}{2} + \frac{1}{4}} \right)(3) = 2 \text{ A}$$

Because the current in an inductor cannot jump or change instantaneously: $i(0^+) = i(0^-) = 2 \text{ A}$

The magnetic energy stored in the inductor at t=0, is:

$$w(0) = \frac{1}{2} L i^2(0) = 2 \text{ J}$$

The magnetic energy is dissipated in the resistor R_2 and at t=∞:

$$i(\infty) = 0$$

In the next chapter we learn the transient response of the inductor during charging and discharging

Ch6. VIII. Inductor Circuits

Consider the circuit shown below. What is the starting voltage across the capacitor and the starting current in the inductor after the switch is opened?

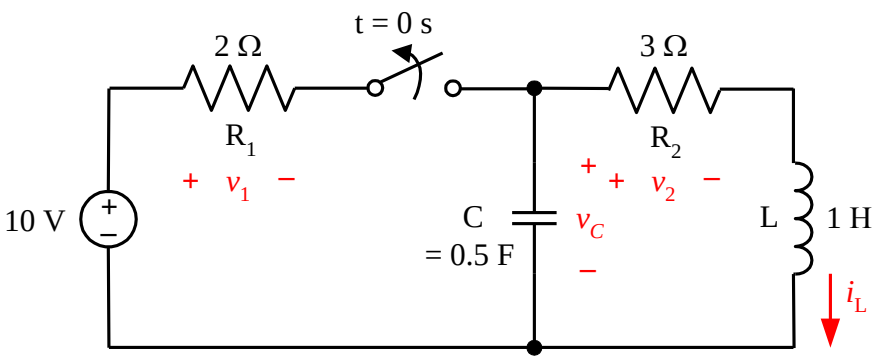

Assume the switch had been closed for a long time.

The starting inductor current is:

$$i_L(0^-) = (10)/(2+3) = 2\ \text{A}$$

The starting capacitor voltage is:

$$v_C(0^-) = \left(\frac{3}{2+3}\right)(10) = 6\ \text{V}$$

At t=0$^-$, the circuit is:

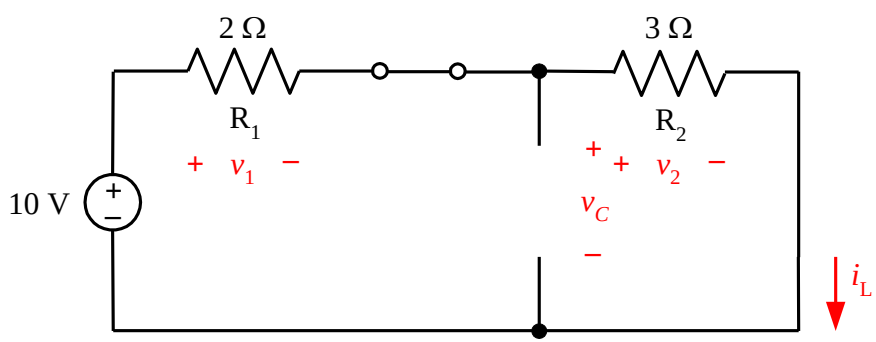

Because the inductor current and capacitor voltage cannot 'jump':

$$v_C(0^+) = v_C(0^-) = 6\ \text{V}$$

$$i_L(0^+) = i_L(0^-) = 2\ \text{A}$$

Ch6. VIII. Inductor Circuits

Consider the series combination of inductors.

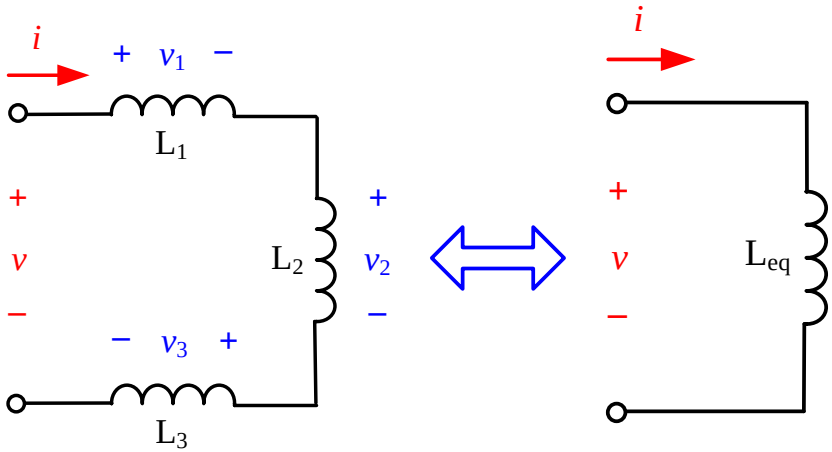

With inductors it is good to be able to think in terms of flux linkage.

The current must be the same in L_1, L_2, and L_3. Thus:

$$\lambda_1 = L_1 i,\ \lambda_2 = L_2 i,\ \lambda_3 = L_3 i$$

$$\lambda_{\text{Total}} = \lambda_1 + \lambda_2 + \lambda_3 = \left(L_1 + L_2 + L_3\right) i$$

$$\lambda_{\text{Total}} = L_{\text{eq}} i \qquad L_{\text{eq}} = L_1 + L_2 + L_3$$

Observe that:

$$\lambda_1 = L_1 i = \frac{L_1}{L_1 + L_2 + L_3}\lambda_{\text{Total}} \quad \lambda_2 = L_2 i = \frac{L_2}{L_1 + L_2 + L_3}\lambda_{\text{Total}} \quad \lambda_3 = L_3 i = \frac{L_3}{L_1 + L_2 + L_3}\lambda_{\text{Total}}$$

Inductors in series provide: Flux Linkage Division

Inductors in series add like resistors in series.

For N inductors in series:

$$L_{eq} = L_1 + L_2 + \cdots + L_N$$

Ch6. VIII. Inductor Circuits

Consider the parallel combination of inductors.

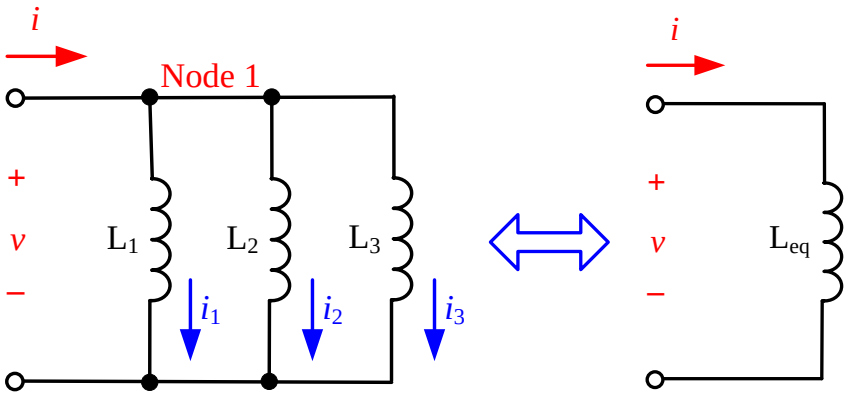

How is the current i divided among the inductors ?

With inductors, it is good to be able to think in terms of flux linkage.

What is the flux linkage in L_1 , L_2 , and L_3 ?

The critical observation is that flux linkage is the integral of voltage and the inductors have the same voltage.

Thus, the flux linkage in all inductors must be the same !

$$i_1 + i_2 + i_3 = i$$

$$\frac{\lambda}{L_1} + \frac{\lambda}{L_2} + \frac{\lambda}{L_3} = \lambda\left(\frac{1}{L_1} + \frac{1}{L_2} + \frac{1}{L_3}\right) = i$$

$$\lambda L_{eq} = i \quad L_{eq} = \left(\frac{1}{L_1} + \frac{1}{L_2} + \frac{1}{L_3}\right)^{-1} = L_1 \parallel L_2 \parallel L_3$$

Inductors in parallel perform current division and add like resistors in parallel.

For N inductors in parallel: $L_{eq} = \left(\frac{1}{L_1} + \frac{1}{L_2} + \cdots + \frac{1}{L_N}\right)^{-1}$

Ch6. VIII. Inductor Circuits

Calculate the equivalent inductance of the inductive ladder network.

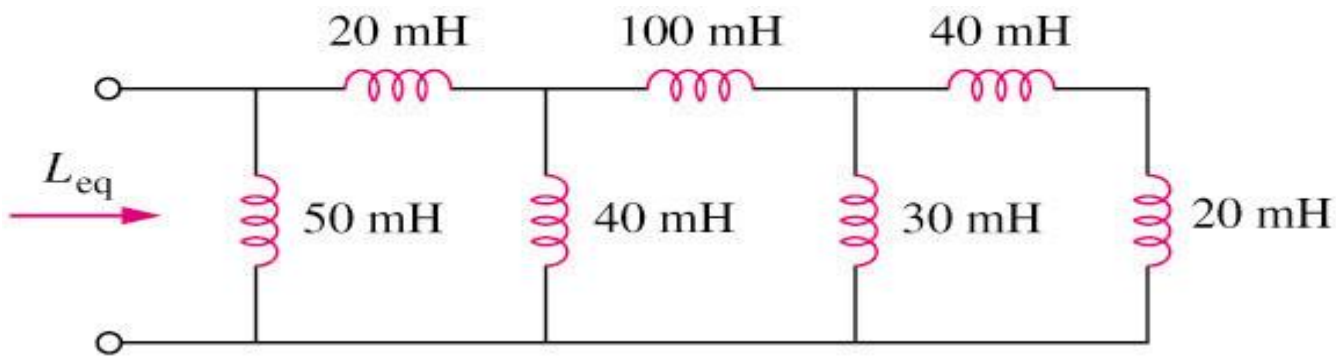

$$L_{eq} = \left(\left(\left(\left((40+20)\,\|\,30\right)+100\right)\,\|\,40\right)+20\right)\,\|\,50\,[\text{mH}]$$

$$L_{eq} = \left(120\,\|\,40+20\right)\,\|\,50 = 50\,\|\,50 = 25\,[\text{mH}]$$

CAPACITORS AND INDUCTORS

Ch6. IX. Summary

	Resistor	Capacitor	Inductor
Symbol & units	R (Ohms)	C (Farads)	L (Henrys)
v-i relation	$v(t) = R\,i(t)$	$i(t) = C\dfrac{dv(t)}{dt}$	$v(t) = L\dfrac{di(t)}{dt}$
	$i(t) = G\,v(t)$	$v(t) = \dfrac{1}{C}\int_{t_0}^{t} i(\tau)\,d\tau + v(t_0)$	$i(t) = \dfrac{1}{L}\int_{t_0}^{t} v(\tau)\,d\tau + i(t_0)$
Stored energy	none	$w(t) = \dfrac{1}{2}C\,v^2(t)$	$w(t) = \dfrac{1}{2}L\,i^2(t)$
Continuity	no constraint	v(t) continuous	i(t) continuous
In series	$R_{eq} = R_1 + R_2 + \cdots + R_N$	$C_{eq} = \left(\dfrac{1}{C_1} + \dfrac{1}{C_2} + \cdots + \dfrac{1}{C_N}\right)^{-1}$	$L_{eq} = L_1 + L_2 + \cdots + L_N$
In parallel	$R_{eq} = \left(\dfrac{1}{R_1} + \dfrac{1}{R_2} + \cdots + \dfrac{1}{R_N}\right)^{-1}$	$C_{eq} = C_1 + C_2 + \cdots + C_N$	$L_{eq} = \left(\dfrac{1}{L_1} + \dfrac{1}{L_2} + \cdots + \dfrac{1}{L_N}\right)^{-1}$

Ch6. X. Mutual Inductance (not on the exam)

Magnetically coupled circuits are typically covered in detail in power engineering courses. However, we provide a brief overview here.

Magnetically coupled coils may be used to transfer energy from one circuit to another. For example, transformers are used for stepping up or stepping down ac voltages and currents. Transformers are also used for impedance matching and isolation.

Mutual inductance refers to the ability of one inductor to induce a voltage across a neighbouring inductor.

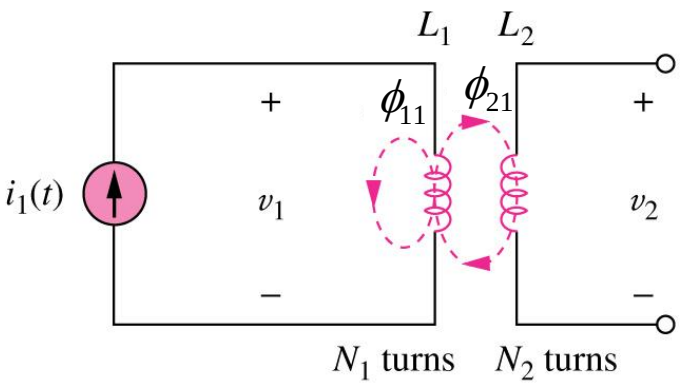

$$v_2 = M_{21}\frac{di_1}{dt}$$

v_2: open-circuit mutual voltage across coil 2

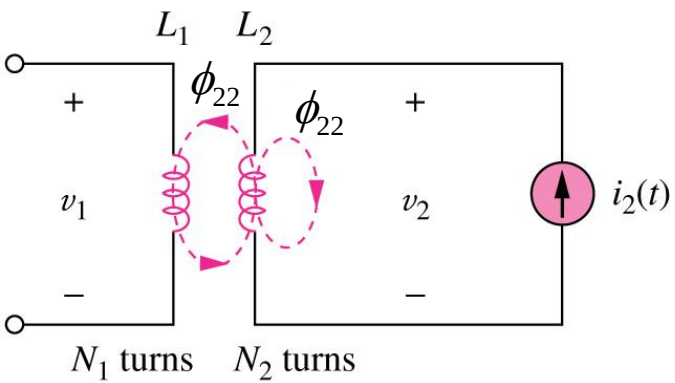

$$v_1 = M_{12}\frac{di_2}{dt}$$

v_1: open-circuit mutual voltage across coil 1

Ch6. X. Mutual Inductance

Two fundamental equations for coils:

1. $\lambda = N\phi$ 2. $\phi = \mathcal{P}Ni$ $\mathcal{P}$ is the permeance

With mutual inductance, we need to keep track of which coil the flux links and which coil is carrying the current:

ϕ_{ij} i labels the flux linking coil,
j labels the current carrying coil

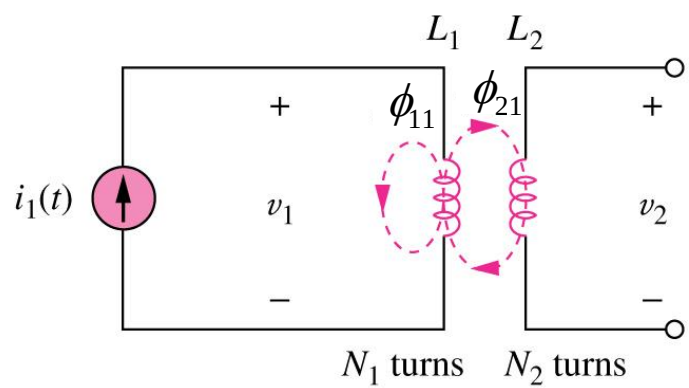

Flux and Permeance are linearly additive:

$$\phi_1 = \phi_{11} + \phi_{21} \qquad \mathcal{P}_1 = \mathcal{P}_{11} + \mathcal{P}_{21}$$

Ch6. X. Mutual Inductance

Flux linkage equations:

$$\lambda_1 = N_1^2 \mathcal{P}_1 i_1 \qquad \lambda_2 = N_2^2 \mathcal{P}_2 i_2 \qquad \lambda_{21} = N_2 N_1 \mathcal{P}_{21} i_1 \qquad \lambda_{12} = N_1 N_2 \mathcal{P}_{12} i_2$$

$$L_1 = N_1^2 \mathcal{P}_1 \qquad L_2 = N_2^2 \mathcal{P}_2 \qquad M_{21} = N_2 N_1 \mathcal{P}_{21} \qquad M_{12} = N_1 N_2 \mathcal{P}_{12}$$

In magnetic materials the permeance, $\mathcal{P}$, varies nonlinearly with the current.

In non-magnetic materials the permeance, $\mathcal{P}$, is independent of the current.

For non-magnetic materials:

$$\mathcal{P}_{21} = \mathcal{P}_{12}$$

$$M_{21} = M_{12} = M$$

$$\Rightarrow$$

$$M = k\sqrt{L_1 L_2}\ , \quad 0 \le k \le 1$$

$$\frac{1}{k^2} = \left(1 + \frac{\mathcal{P}_{11}}{\mathcal{P}_{12}}\right)\left(1 + \frac{\mathcal{P}_{22}}{\mathcal{P}_{12}}\right)$$

Ch6. X. Mutual Inductance

The dot convention:

- If a current enters the dotted terminal of one coil, the reference polarity of the mutual voltage in the second coil is positive at the dotted terminal of the second coil.

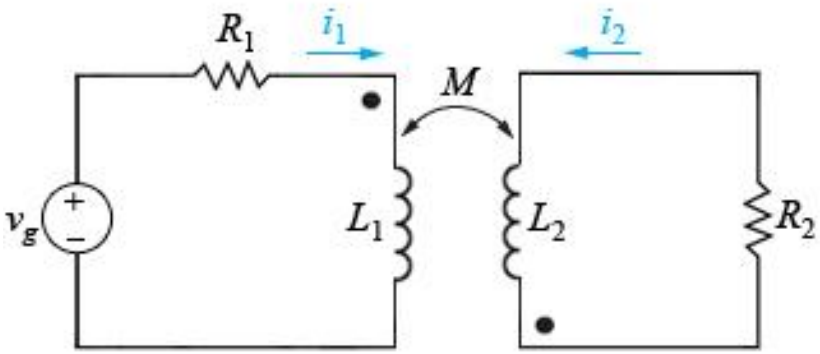

Ch6. X. Mutual Inductance

The dot convention:

- If a current enters the dotted terminal of one coil, the reference polarity of the mutual voltage in the second coil is positive at the dotted terminal of the second coil.

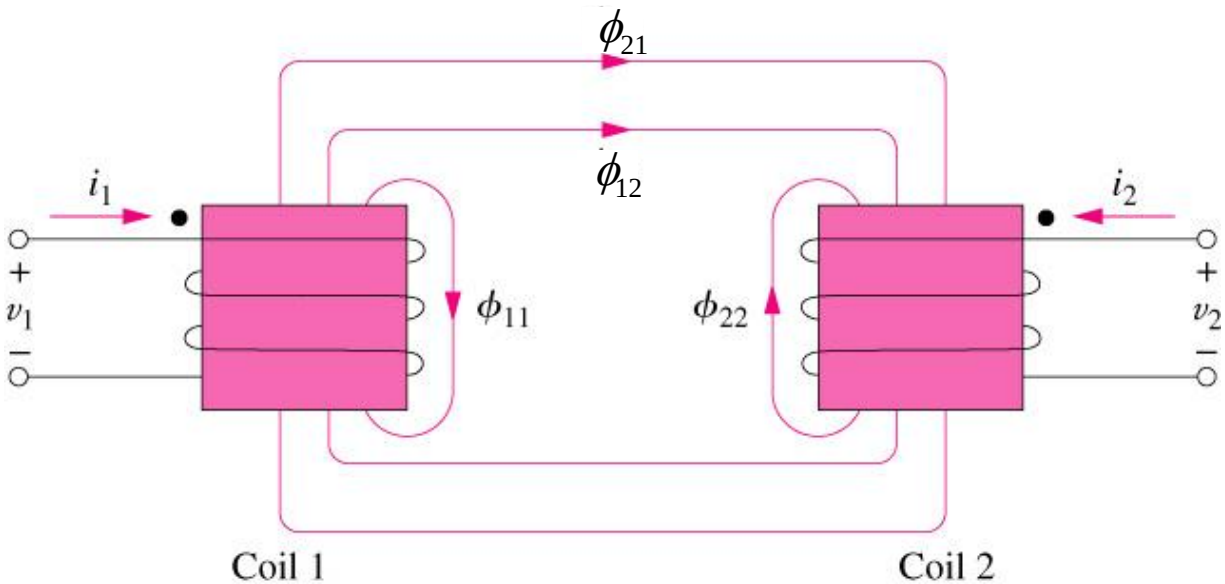

Ch6. X. Mutual Inductance

The dot convention: how to place the dots

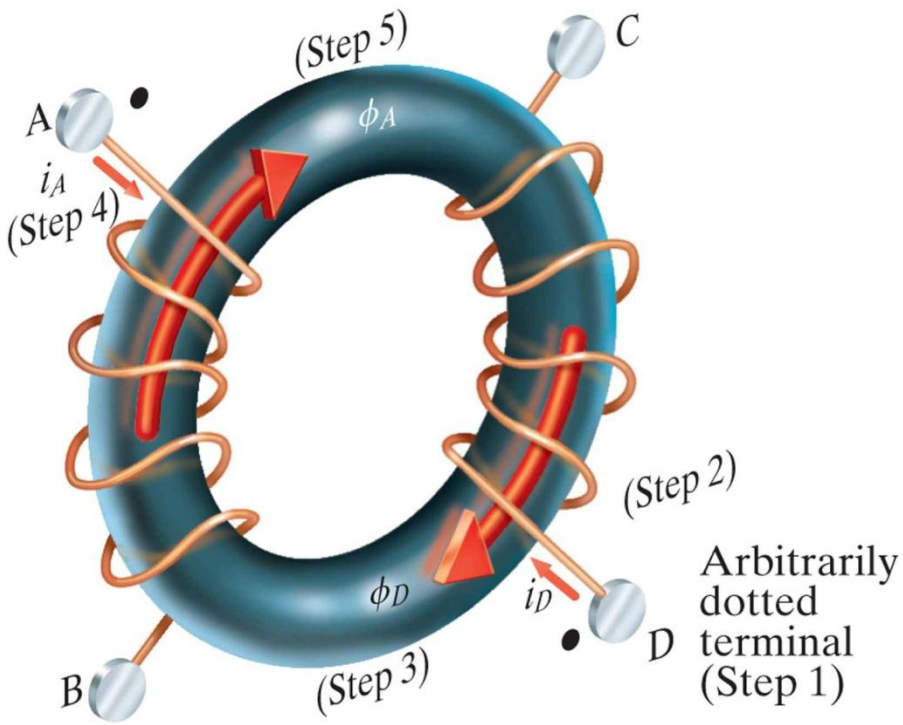

Step 1: Select a terminal and mark a dot

Step 2: Determine the flux direction

Step 3: Select a terminal of the other coil

Step 4: Determine the flux direction

Step 5: If flux is in the same direction, then mark a dot on that terminal, otherwise mark a dot on the opposite terminal.

Ch6. X. Mutual Inductance

Calculate the equivalent inductance:

Use $v = L\frac{di}{dt} \pm M\frac{di}{dt}$ and apply dot convention

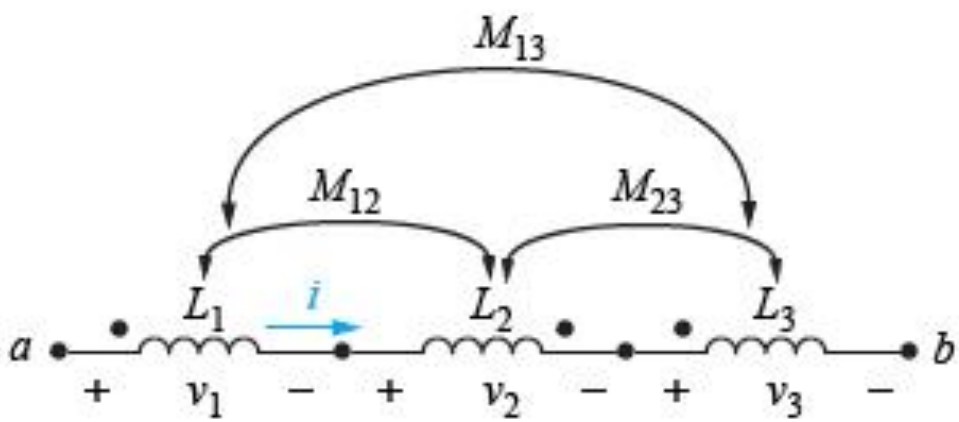

$$v_1 = \left(L_1 - M_{12} + M_{13}\right)\frac{di}{dt}$$

$$v_2 = \left(L_2 - M_{12} - M_{23}\right)\frac{di}{dt}$$

$$v_3 = \left(L_3 + M_{13} - M_{23}\right)\frac{di}{dt}$$

$$v_{ab} = \left(L_1 + L_2 + L_3 - 2M_{12} + 2M_{13} - 2M_{23}\right)\frac{di}{dt}$$

$$L_{eq} = \left(L_1 + L_2 + L_3 - 2M_{12} + 2M_{13} - 2M_{23}\right)$$

Ch6. X. Mutual Inductance

Calculate the equivalent inductance:

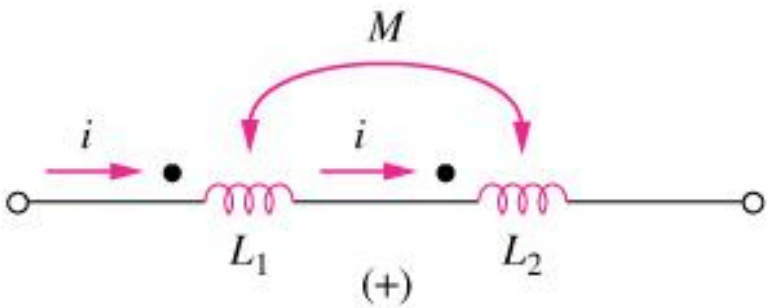

$$L_{eq} = L_1 + L_2 + 2M$$

(series-aiding connection)

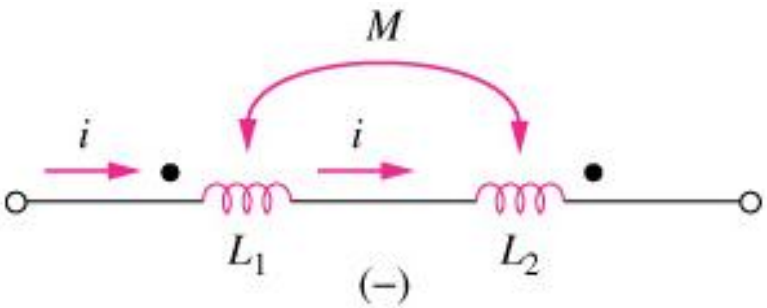

$$L_{eq} = L_1 + L_2 - 2M$$

(series-opposing connection)

Ch6. X. Mutual Inductance

Write the mesh equation for i_1:

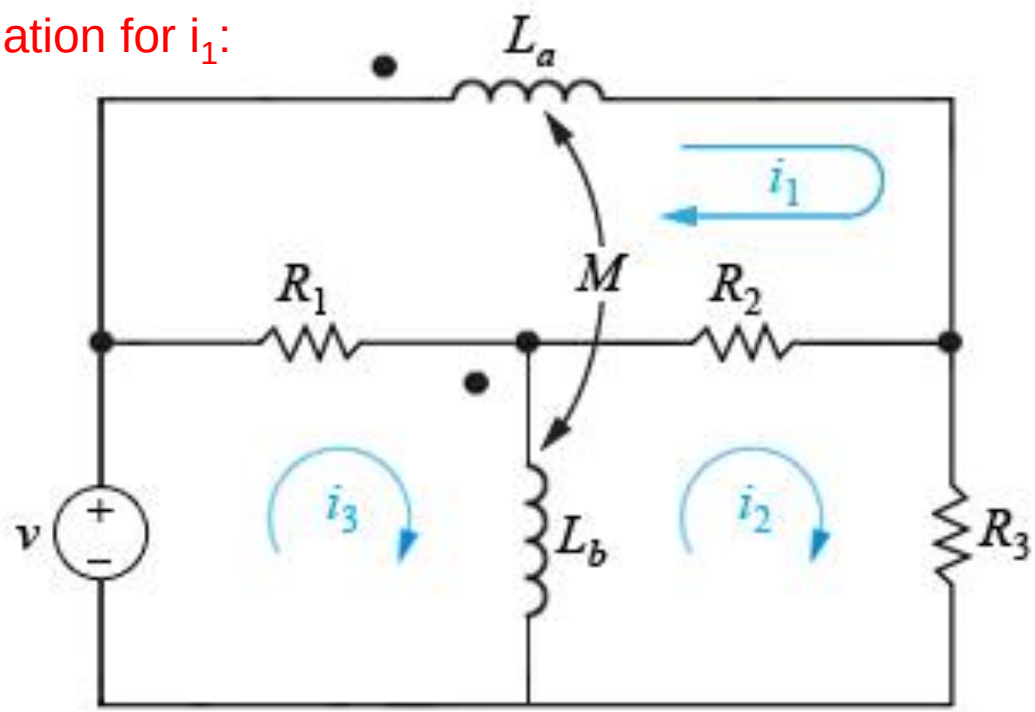

$$R_1(i_1 - i_3) + L_a \frac{di_1}{dt} + R_2(i_1 - i_2) + M\left(\frac{di_3}{dt} - \frac{di_2}{dt}\right) = 0$$

Ch7. I. First-Order RC Circuits

Consider the source free RC circuit:

We assume that before the switch is closed, the capacitor has been charged to voltage V_o.

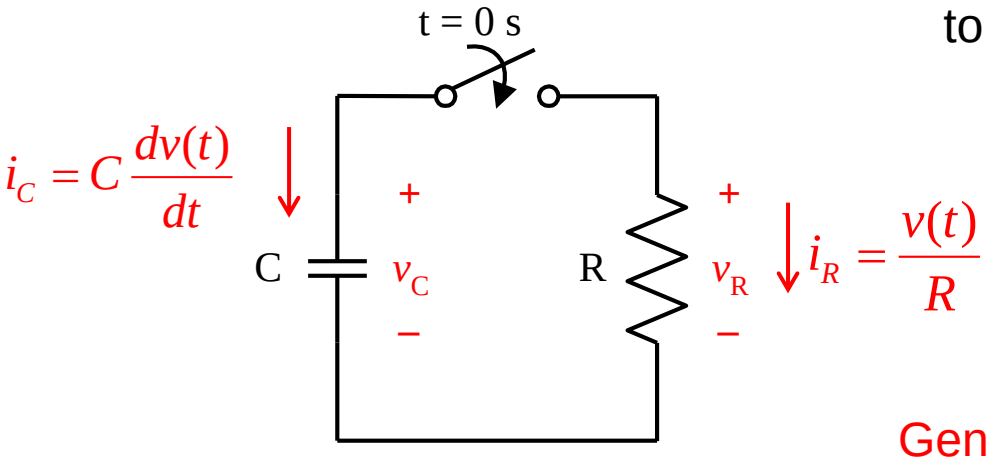

As capacitor voltage can't change instantaneously:

$$v_C(0^+) = v_C(0^-) = V_o$$

Generally use nodal analysis with capacitors.

By KCL

$$i_R + i_C = 0 \quad \rightarrow \quad \frac{v}{R} + C\frac{dv}{dt} = 0$$

Apply Kirchhoff's laws to purely resistive circuit results in algebraic equations.

Apply the laws to RC and RL circuits produces differential equations.

Ch7. I. First-Order RC Circuits

What is the solution of $RC\dfrac{dv(t)}{dt}+v(t)=0$ with initial condition $v(0^+)=V_o$?

Method 1:

$$\Rightarrow \frac{dv(t)}{v(t)}=-\frac{dt}{RC} \qquad \Rightarrow \int_{v(0^+)}^{v(t)}\frac{dv}{v}=-\int_{0^+}^{t}\frac{d\tau}{RC} \qquad \Rightarrow \left[\ln(v)\right]_{v(0^+)}^{v(t)}=-\left[\frac{\tau}{RC}\right]_{0^+}^{t}$$

$$\Rightarrow \ln(v(t))-\ln(v(0^+))=-\left[\frac{t}{RC}-\frac{0}{RC}\right] \qquad \Rightarrow \ln\left(\frac{v(t)}{v(0^+)}\right)=-\frac{t}{RC}$$

$$\boxed{\Rightarrow v(t)=v(0^+)e^{-t/RC}=V_o\,e^{-t/RC}=V_o\,e^{-t/\tau}}$$

(τ = RC: time constant of the circuit)

$$\boxed{\text{more generally : } v(t)=v(\infty)+[v(0^+)-v(\infty)]e^{-t/RC}}$$

Ch7. I. First-Order RC Circuits

$$v(t) = V_o\, e^{-t/RC} = V_o\, e^{-t/\tau}$$

(τ = RC: time constant of the circuit)

$$\frac{dv(t)}{dt} = -\frac{V_o}{RC}\, e^{-t/RC}$$

$$\text{So slope at } t = 0^+ : -\frac{V_o}{RC} = -\frac{V_o}{\tau}$$

Exponential decay with time constant τ

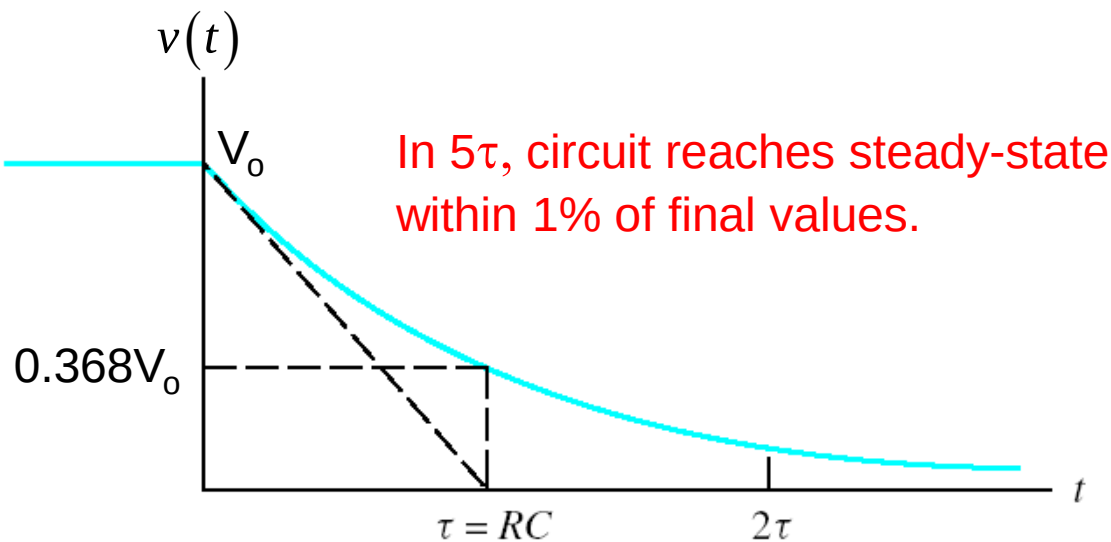

In 5τ, circuit reaches steady-state within 1% of final values.

	v(t)
t = τ	0.3679 V_o
t = 2τ	0.1353 V_o
t = 3τ	0.0498 V_o
t = 4τ	0.0183 V_o
t = 5τ	0.0067 V_o

Ch7. I. First-Order RC Circuits

The time constant τ:

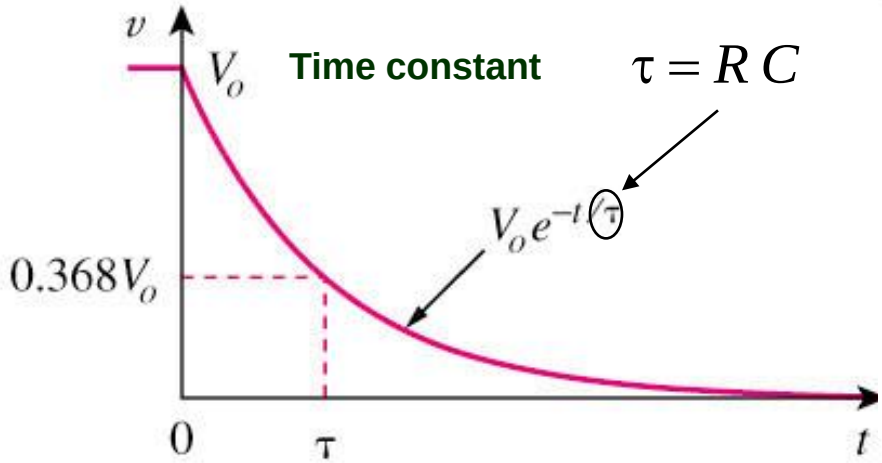

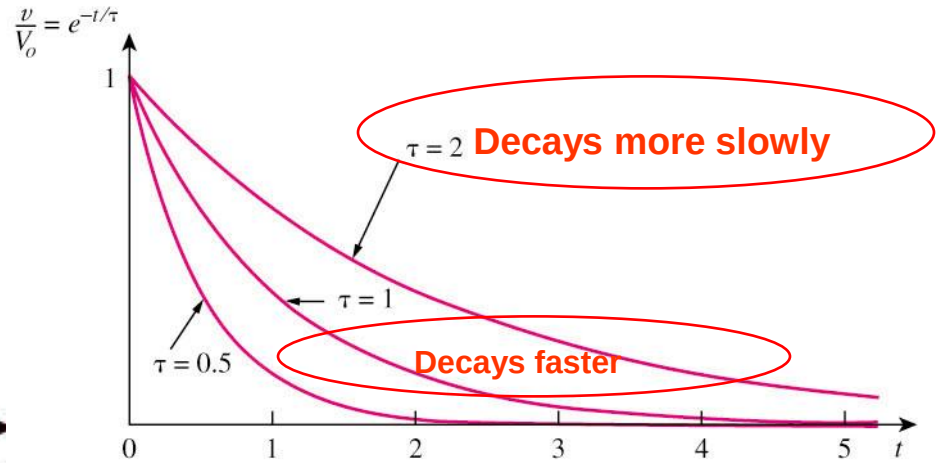

- The **time constant** τ of a circuit is the time required for the response to decay by a factor of 1/*e* or 36.8% of its initial value.
- *v* decays faster for small τ and slower for large τ.

Ch7. I. First-Order RC Circuits

What is the solution of $RC\dfrac{dv(t)}{dt}+v(t)=0$ with initial condition $v(0^+)=V_o$?

Method 2: As the solution to differential equations with constant coefficients and zero right hand side (called homogeneous equations) involve exponentials, we can begin by assuming that solution is of the form $v(t) = K\,e^{st}$

$$\Rightarrow RC\frac{dv(t)}{dt}+v(t)=RCKs\,e^{st}+K\,e^{st}=0 \quad \Rightarrow RCs+1=0$$

(characteristic equation)

as solution of characteristic equation is $s = -1/RC$, we must have $v(t) = K\,e^{-t/RC}$. The constant K, can be evaluated from the initial conditions.

$$\Rightarrow v(0^+)=K=V_o \qquad \boxed{\text{again } v(t)=V_o\,e^{-t/RC}}$$

Ch7. I. First-Order RC Circuits

Consider the driven RC circuit:

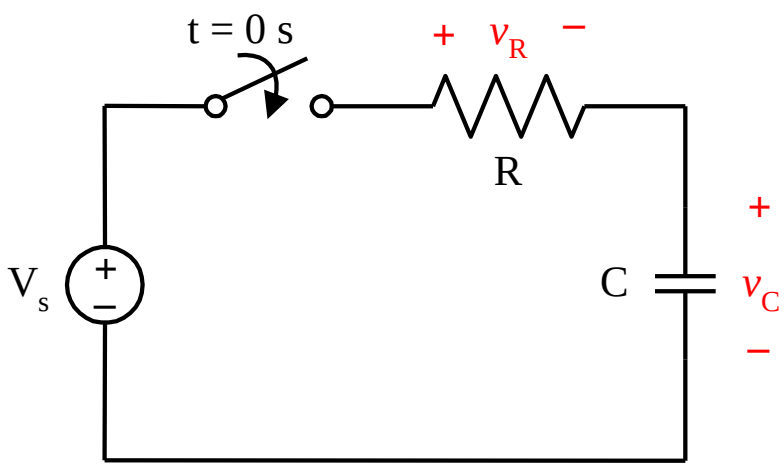

Before the switch is closed, the capacitor has a voltage V_o, i.e. $v_C(0^-) = V_o$

Nodal analysis: $$C\frac{dv(t)}{dt} + \frac{v - V_s}{R} = 0$$

$$\frac{dv(t)}{dt} + \frac{v}{RC} = \frac{V_s}{RC}$$

Homogenous equation: $$\frac{dv(t)}{dt} + \frac{v}{RC} = 0$$

Particular equation: $$\frac{dv(t)}{dt} + \frac{v}{RC} = \frac{V_s}{RC}$$

$\frac{V_s}{RC}$ is referred to as the forcing function.

Ch7. I. First-Order RC Circuits

Consider solving: $$\frac{dv(t)}{dt}+\frac{v}{RC}=\frac{V_s}{RC}$$

Homogenous equation: $$\frac{dv(t)}{dt}+\frac{v}{RC}=0$$

Solution: $v_g(t)$

Particular equation: $$\frac{dv(t)}{dt}+\frac{v}{RC}=\frac{V_s}{RC}$$

Solution: $v_p(t)$

Note that any solution to the homogenous equation can be added to the solution of the particular equation.

$$v(t)=v_p(t)+v_g(t)$$

Ch7. I. First-Order RC Circuits

What is the solution of $\dfrac{dv(t)}{dt}+\dfrac{v}{RC}=\dfrac{V_s}{RC}$ with initial condition $v(0^+)=V_o$?

Method 1:

$$\Rightarrow \frac{dv(t)}{v(t)-V_s}=-\frac{dt}{RC} \quad \Rightarrow \int_{v(0^+)}^{v(t)} \frac{dv}{v-V_s}=-\int_{0^+}^{t}\frac{d\tau}{RC} \quad \Rightarrow \left[\ln(v-V_s)\right]_{v(0^+)}^{v(t)}=-\left[\frac{\tau}{RC}\right]_{0^+}^{t}$$

$$\Rightarrow \ln(v(t)-V_s)-\ln(v(0^+)-V_s)=-\left[\frac{t}{RC}-\frac{0}{RC}\right] \quad \Rightarrow \ln\left(\frac{v(t)-V_s}{v(0^+)-V_s}\right)=-\frac{t}{RC}$$

$$\boxed{\Rightarrow v(t)=V_s+[v(0^+)-V_s]\,e^{-t/RC}=V_s+[V_o-V_s]\,e^{-t/RC}}$$ (τ = RC: time constant of the circuit)

$$\boxed{\text{can also be written as : } v(t)=v(\infty)+[v(0^+)-v(\infty)]e^{-t/RC}}$$

Ch7. I. First-Order RC Circuits

$$v(t) = V_s + [v(0^+) - V_s]\, e^{-t/RC} = V_s + [V_o - V_s]\, e^{-t/RC}$$

(τ = RC: time constant of the circuit)

To better understand the time constant, we compute dv/dt. We will assume V_o is 0, so there was no initial charge on the capacitor.

$$\frac{dv(t)}{dt} = \frac{V_s}{RC}\, e^{-t/RC}$$

So slope at $t = 0^+$: $\dfrac{V_s}{\tau}$

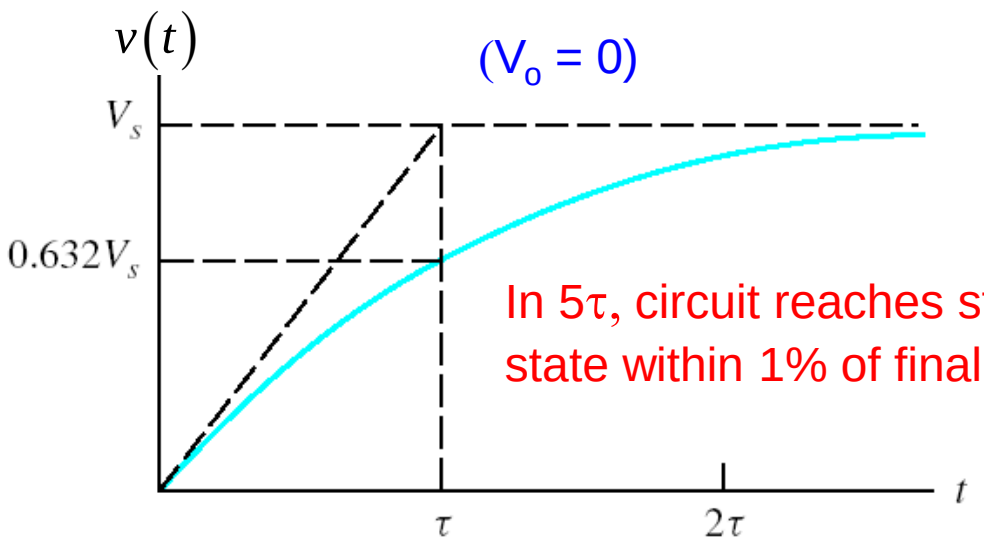

In 5τ, circuit reaches steady-state within 1% of final values.

	v(t)
t = τ	0.6321 V_s
t = 2τ	0.8647 V_s
t = 3τ	0.9502 V_s
t = 4τ	0.9817 V_s
t = 5τ	0.9933 V_s

Ch7. I. First-Order RC Circuits

$$RC\frac{dv(t)}{dt}+v(t)=f(t)$$

Method 2: We can solve for any arbitrary forcing function (f(t)), i.e

homogeneous equation: $RC\dfrac{dv(t)}{dt}+v(t)=0$

homogeneous solution is worked out as before by assuming the form $v(t) = K_2\, e^{st}$, determining and solving the characteristic equation.

$$\Rightarrow RC\frac{dv(t)}{dt}+v(t)=RCK_2 s\, e^{st}+K_2\, e^{st}=0 \quad \Rightarrow RCs+1=0$$ (characteristic equation)

as solution of characteristic equation is $s = -1/RC$, we must have $v(t) = K_2\, e^{-t/RC}$. The constant K_2, can be evaluated from the initial conditions later.

Ch7. I. First-Order RC Circuits

Method 2: (continued)

particular equation: $RC\dfrac{dv(t)}{dt}+v(t)=V_s$

Basic trick to determine the particular solution is to assume that *v*(t) is a linear combination of the mathematical form of f(t) and its derivatives that are different in form from f(t).

Here the forcing function is constant and the derivative of a constant is 0, so we assume that *v*(t) = K_1, where K_1 is an unknown constant.

$$RC\frac{dv(t)}{dt}+v(t)=V_s \quad \Rightarrow RC(0)+K_1=V_s \quad \Rightarrow K_1=V_s$$

So the complete solution is given by $v(t) = v_g(t) + v_p(t) = K_2\, e^{-t/RC} + V_s$. Constant K_2 can now be evaluated from initial conditions.

$$\Rightarrow v(0^+)=V_s+K_2=V_o \qquad \Rightarrow K_2=V_o-V_s \text{ and } v(t)=V_s+[V_o-V_s]\,e^{-t/RC}$$

Ch7. I. First-Order RC Circuits: Exponential Decay or Exponential Rise

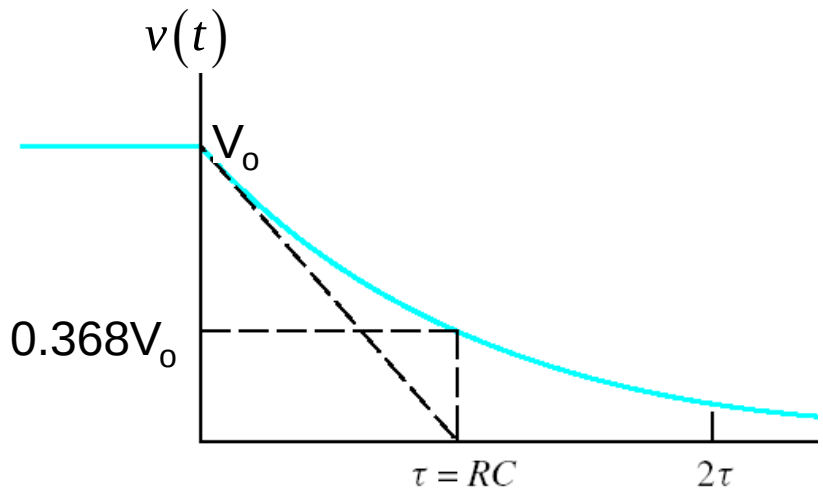

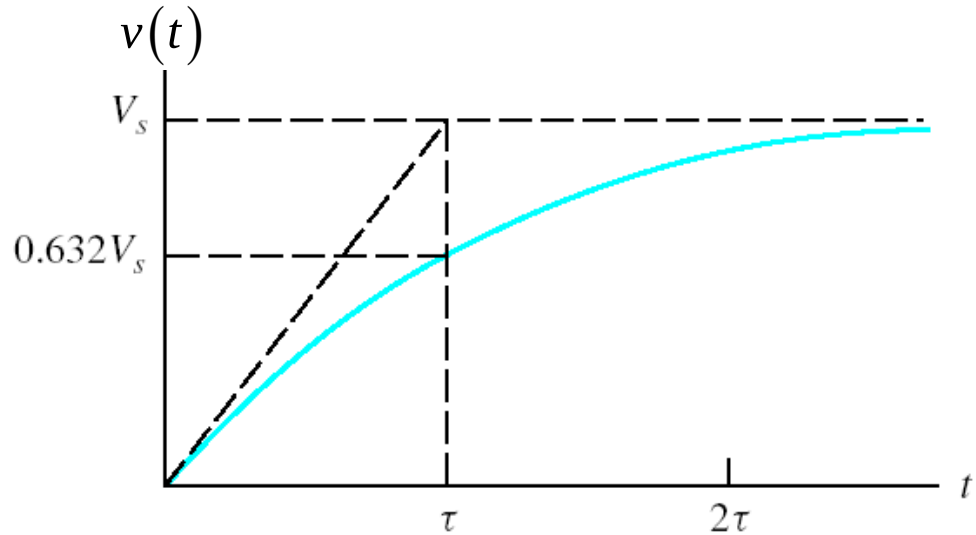

	v(t)
t = τ	0.3679 V_o
t = 2τ	0.1353 V_o
t = 3τ	0.0498 V_o
t = 4τ	0.0183 V_o
t = 5τ	0.0067 V_o

In 5τ, circuit reaches steady-state within 1% of final values.

	v(t)
t = τ	0.6321 V_s
t = 2τ	0.8647 V_s
t = 3τ	0.9502 V_s
t = 4τ	0.9817 V_s
t = 5τ	0.9933 V_s

Ch7. I. First-Order RC Circuits

Example 1: Find the voltage across the capacitor for t > 0 (given $v_C(0^-) = 5$ V)

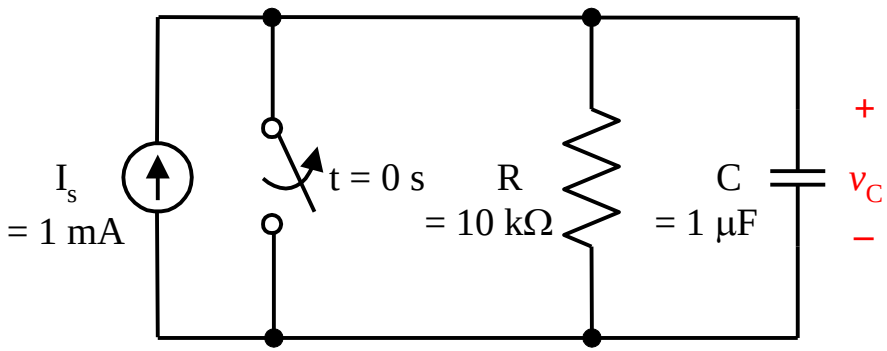

The differential equation is given by:

$$\text{KCL} \Rightarrow I_s = C\frac{dv_C(t)}{dt} + \frac{v_C(t)}{R}$$

$$\boxed{\Rightarrow RC\frac{dv_C(t)}{dt} + v_C(t) = R\,I_s}$$

(so time constant τ = RC = 10 ms)

After the switch is opened, the capacitor charges to a steady-state value. At steady-state the capacitor is open-circuit.

$$v_C(\infty) = R\,I_s = 10\ \text{V}$$

As the capacitor voltage can't change instantaneously:

$$v_C(0^+) = v_C(0^-) = 5\ \text{V}$$

Ch7. I. First-Order RC Circuits

Example 1: Find the voltage across the capacitor for t > 0 (given $v_C(0^-) = 5$ V)

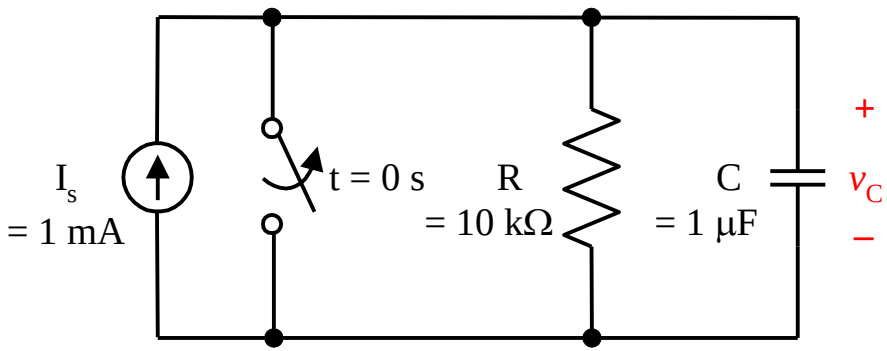

$$v_C(0^+) = v_C(0^-) = 5 \text{ V}$$

$$v_C(\infty) = R I_s = 10 \text{ V}$$

$$\boxed{\begin{aligned} v_C(t) &= v_C(\infty) + [v_C(0^+) - v_C(\infty)]e^{-t/RC} \\ &= 10 - 5e^{-100t} \end{aligned}}$$

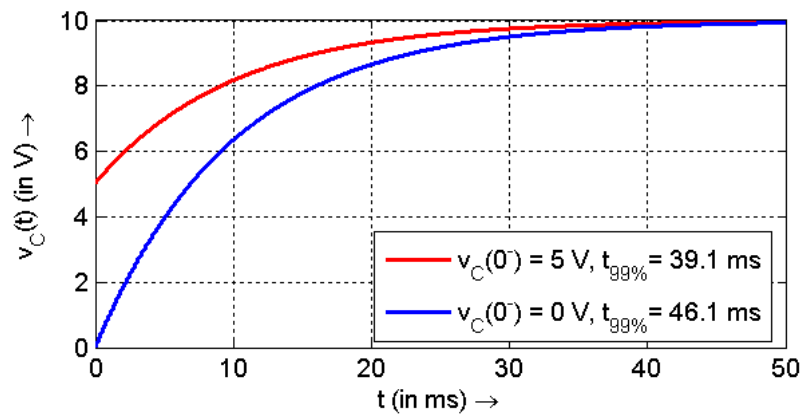

When does $v_C(t)$ reach within 1% of its final value?

$$\Rightarrow 9.9 = 10 - 5e^{-100t} \quad \boxed{\Rightarrow t = -\ln(0.02)/100 = 39.12 \text{ ms}}$$

Ch7. I. First-Order RC Circuits

Example 2: Find v(t) for t > 0. Assume the circuit had reached steady-state before the switch opened.

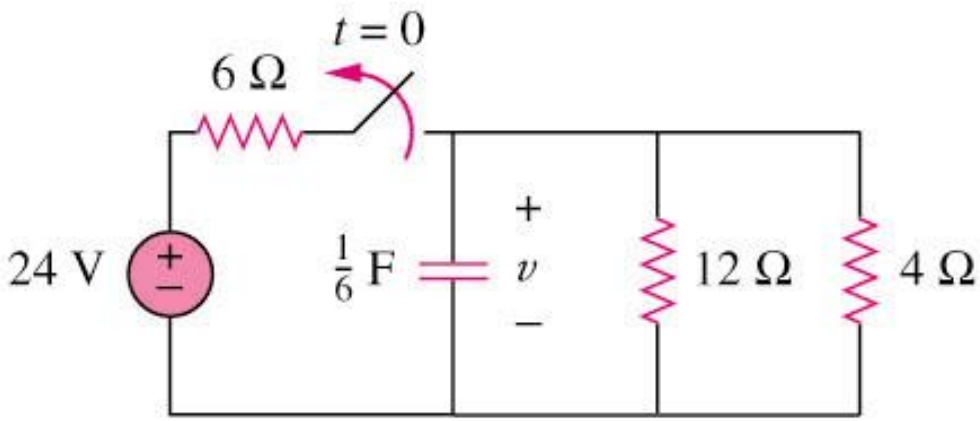

$$v(0^-) = 24\frac{3}{6+3} = 8[\mathrm{V}]$$

$$v(0^+) = v(0^-) = 8[\mathrm{V}]$$

$$v(\infty) = 0$$

$$\tau = RC = 3\cdot\frac{1}{6} = \frac{1}{2}$$

$$v_C(t) = v_C(\infty) + [v_C(0^+) - v_C(\infty)]e^{-t/RC}$$

$$v_C(t) = 8e^{-2t}$$

Ch7. II. First-Order RL Circuits

Consider the circuit shown below. Find $i_L(t)$. Assume that before the switch closed $i_L(0^-) = I_o$.

We generally use mesh analysis with inductors.

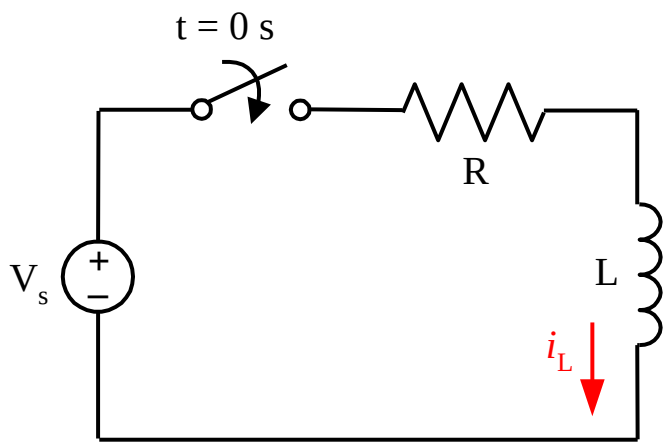

KVL for t > 0: $V_s - R\,i_L(t) - L\dfrac{di_L(t)}{dt} = 0$

$$\boxed{\Rightarrow \left(\frac{L}{R}\right)\frac{di_L(t)}{dt} + i_L(t) = \frac{V_s}{R}}$$

After the switch is closed, the current builds up to a steady-state value of:

$$i_L(\infty) = V_s / R$$

This differential equation is the same as for the capacitor circuits, except that $\tau = L/R$ is the time constant of the circuit.

Ch7. II. First-Order RL Circuits

Consider the circuit shown below. Find $i_L(t)$. Assume that before the switch closed $i_L(0^-) = I_o$.

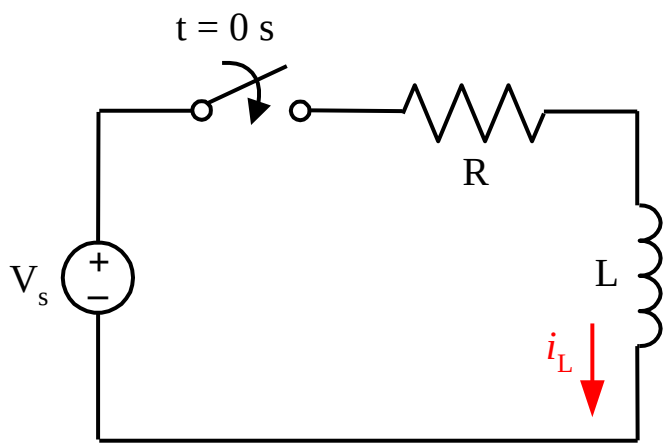

$$\boxed{\left(\frac{L}{R}\right)\frac{di_L(t)}{dt} + i_L(t) = \frac{V_s}{R}}$$

$$i_L(\infty) = V_s / R$$

Solve this differential equation using direct integration or as the sum of the homogeneous and particular solution.

Answer always has the same form:

$$\boxed{i_L(t) = i_L(\infty) + [i_L(0^+) - i_L(\infty)]e^{-tR/L}}$$

$$\boxed{i_L(t) = \frac{V_s}{R} + \left(I_o - \frac{V_s}{R}\right)e^{-tR/L}}$$

Ch7. II. First-Order RL Circuits

Example 1: Find the current through the inductor for t > 0 (assume the switch has been closed for a long time before t = 0 s)

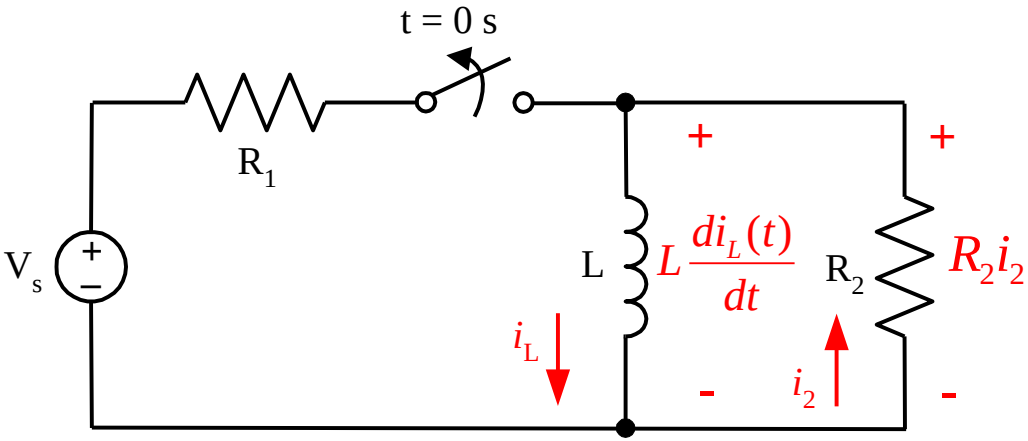

As the circuit is in a steady state before t = 0 s, the inductor is behaving like a short circuit.

$$\Rightarrow i_L(0^-) = \frac{V_s}{R_1} \quad (\text{and } i_2(0^-) = 0)$$

As the inductor current can't change instantaneously:

$$i_L(0^+) = i_L(0^-) = \frac{V_s}{R_1}$$

$$\text{Mesh Analysis} \Rightarrow L\frac{di_L(t)}{dt} + R_2\, i_L(t) = 0$$

$$\boxed{\Rightarrow \left(\frac{L}{R_2}\right)\frac{di_L(t)}{dt} + i_L(t) = 0}$$

Ch7. II. First-Order RL Circuits

Example 1: Find the current through the inductor for t > 0 (assume the switch has been closed for a long time before t = 0 s)

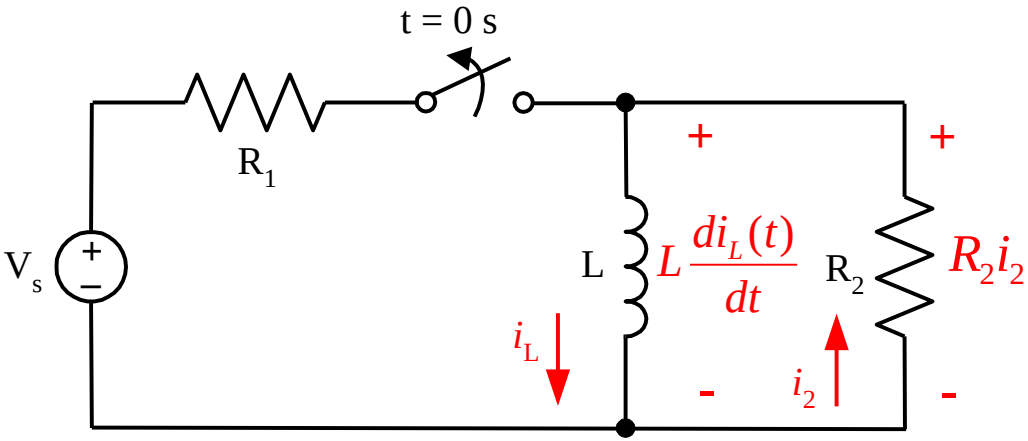

$$\Rightarrow \left(\frac{L}{R_2}\right)\frac{di_L(t)}{dt} + i_L(t) = 0$$

Long time after t > 0, the circuit is again in steady state and inductor will behave like a short circuit, resulting in $i_L(\infty) = 0$

Recognize the form of the solution:

$$i_L(t) = i_L(\infty) + [i_L(0^+) - i_L(\infty)]e^{-tR_2/L}$$

Time constant is $\tau = L/R_2$

$$i_L(t) = \left(\frac{V_s}{R_1}\right)e^{-tR_2/L}$$

$$\Rightarrow v_L(t) = L\frac{di_L(t)}{dt} = -\left(\frac{V_s R_2}{R_1}\right)e^{-tR_2/L}$$

Ch7. II. First-Order RL Circuits

Example 1:

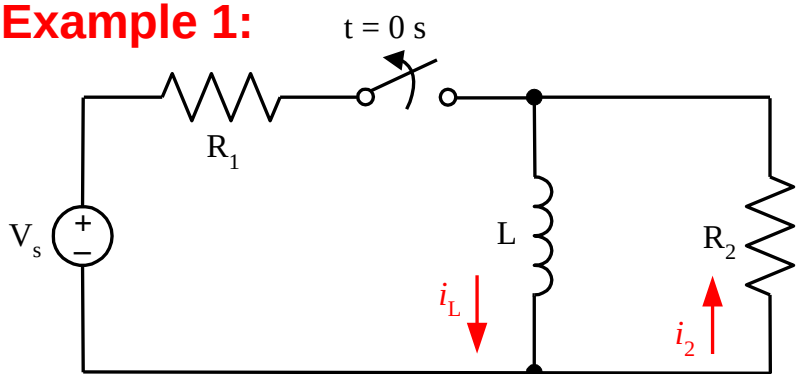

$$i_L(t) = \left(\frac{V_s}{R_1}\right) e^{-tR_2/L}$$

$$\Rightarrow v_L(t) = L\frac{di_L(t)}{dt} = -\left(\frac{V_s R_2}{R_1}\right) e^{-tR_2/L}$$

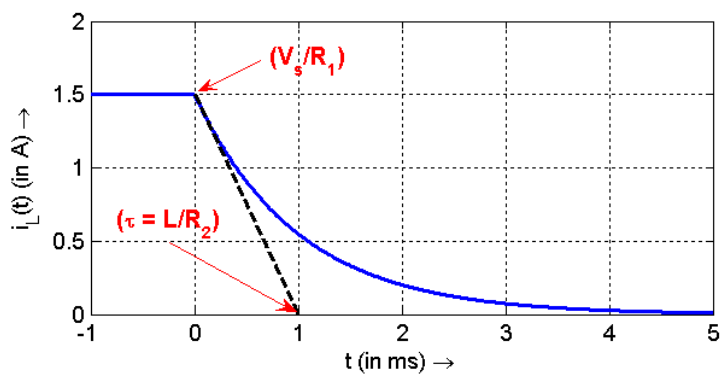

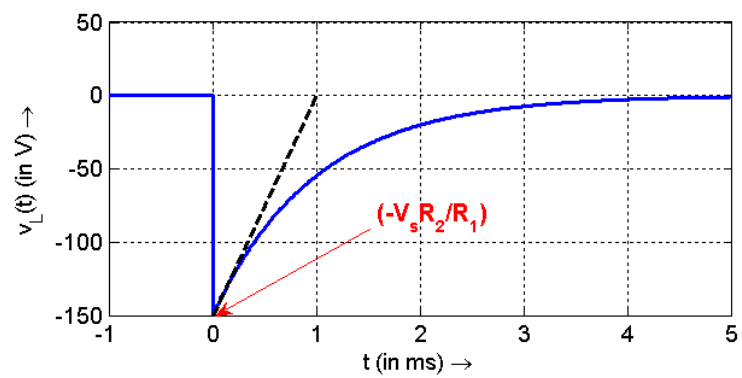

Note that the inductor voltage is discontinuous and becomes negative at 0^+ in order to maintain its current. By proper choice of R_1 and R_2, the inductor voltage can be much greater than V_s !

Ch7. III. First-Order response with multiple sources and resistances.

When multiple sources and resistances are present in a circuit with an inductor or capacitor, you should apply the Thévenin equivalent circuit.

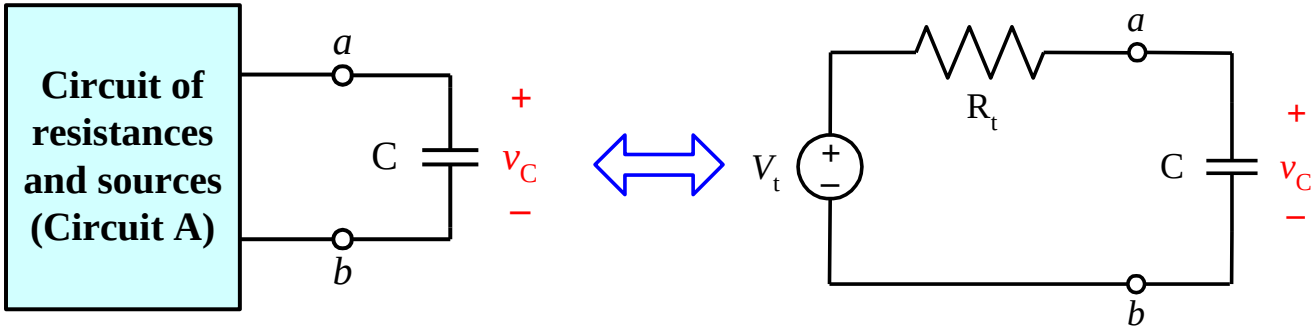

$$\Rightarrow R_t C \frac{dv_C(t)}{dt} + v_C(t) = V_t(t)$$

(in general V_t can vary with time)

Ch7. III. First-Order response with multiple sources and resistances.

When multiple sources and resistances are present in a circuit with an inductor or capacitor, you should apply the Thévenin equivalent circuit.

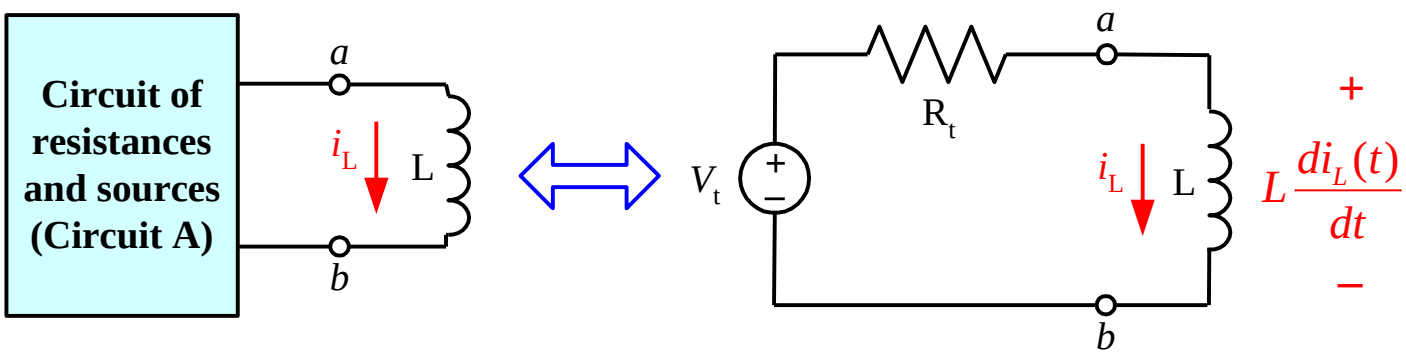

$$\Rightarrow \left(\frac{L}{R_t}\right)\frac{di_L(t)}{dt} + i_L(t) = \frac{V_t(t)}{R_t}$$

(in general V_t can vary with time)

Ch7. III. First-Order response with multiple sources and resistances.

Three steps to find out the step response of an RC circuit: (caveat: voltage/current source are constant)

1. The initial capacitor voltage v(0).
2. The final capacitor voltage v(∞) — DC voltage across C.
3. The time constant $\tau = R_{Th}C$.

$$v(t) = v(\infty) + [v(0+) - v(\infty)]e^{-t/\tau}$$

Ch7. III. First-Order response with multiple sources and resistances.

Three steps to find out the step response of an RL circuit: (caveat: voltage/current source are constant)

1. The initial inductor current i(0) at t = 0+.
2. The final inductor current i(∞).
3. The time constant $\tau = L/R_{Th}$.

$$i(t) = i(\infty) + [i(0+) - i(\infty)]e^{-t/\tau}$$

Ch7. III. First-Order response with multiple sources and resistances.

Example 2: Find the voltage across the capacitor for t > 0 (switch has been open for a long time before t = 0 s)

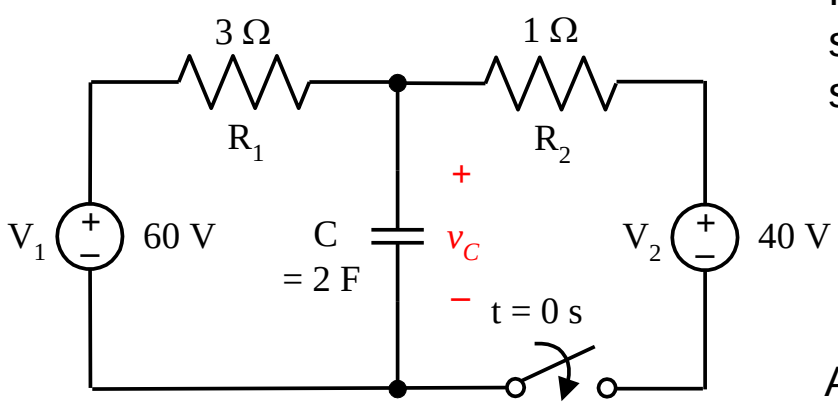

Prior to t = 0 s, the capacitor is charged from the 60 V source through resistance R_1 and reaches the steady state voltage of 60 V, i.e. $v_C(0^-) = 60\ \text{V}$

capacitor voltage can't change instantaneously

$$v_C(0^+) = v_C(0^-) = 60\ \text{V}$$

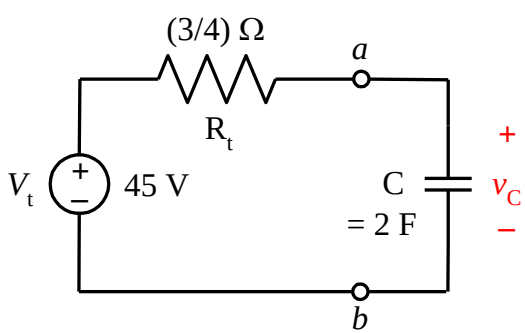

After the switch is closed, we can replace the rest of the circuit by its Thévenin equivalent without affecting the capacitor response. Here we can easily determine that V_{th} = 45 V and R_{th} = (3/4) Ω

the capacitor would reach a steady state voltage of V_{th}, i.e. $v_C(\infty) = 45\ \text{V}$

Ch7. III. First-Order response with multiple sources and resistances.

Example 2: Find the voltage across the capacitor for t > 0 (switch has been open for a long time before t = 0 s)

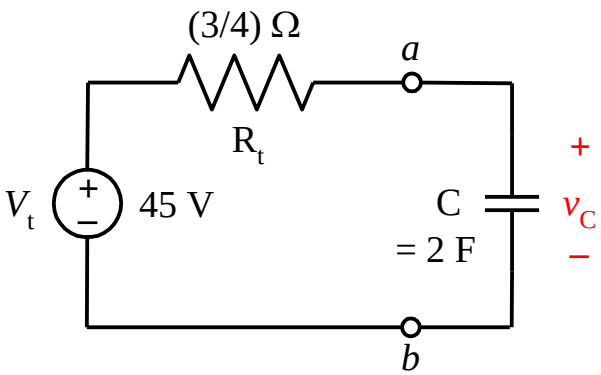

$$R_t C \frac{dv_C(t)}{dt} + v_C(t) = V_t$$

time constant $\tau = R_t C = 1.5$ s

$$v_C(0^+) = 60 \text{ V} \qquad v_C(\infty) = 45 \text{ V}$$

$$v_C(t) = v_C(\infty) + [v_C(0^+) - v_C(\infty)]e^{-t/R_t C}$$
$$= 45 + 15e^{-2t/3}$$

Ch7. III. First-Order response with a sinusoidal source. (Not on the exam)

Example 1: Find the voltage across the capacitor for t > 0 (given $v_C(0^-) = 1$ V)

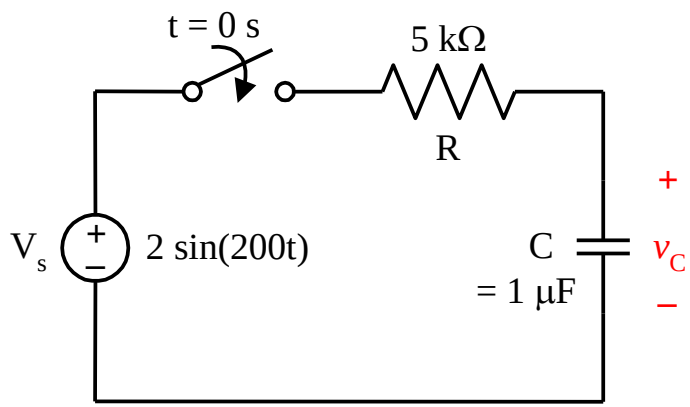

$$RC\frac{dv_C(t)}{dt} + v_C(t) = V_s$$

$$\boxed{\Rightarrow (5\times10^{-3})\frac{dv_C(t)}{dt} + v_C(t) = 2\sin(200t)}$$

homogeneous equation: $\boxed{(5\times10^{-3})\frac{dv_C(t)}{dt} + v_C(t) = 0}$

Assume homogeneous solution has the form: $v_g(t) = K_0\, e^{st}$

Ch7. III. First-Order response with a sinusoidal source. (Not on the exam)

Example 1: Find the voltage across the capacitor for t > 0 (given $v_C(0^-) = 1$ V)

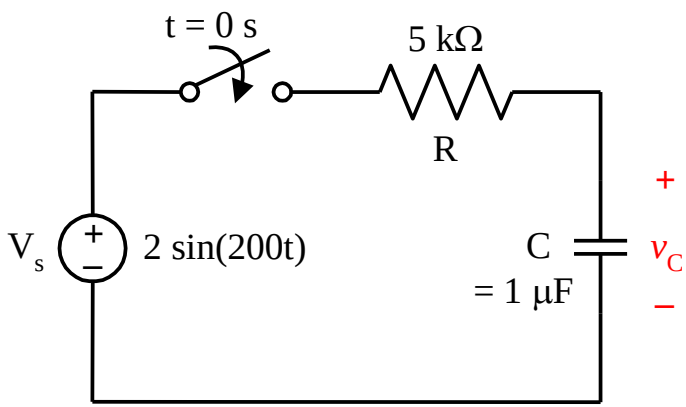

homogeneous equation: $\boxed{(5\times10^{-3})\dfrac{dv_C(t)}{dt}+v_C(t)=0}$

Assume: $v_g(t) = K_0\, e^{st}$

$$\Rightarrow (5\times10^{-3})\frac{dv_g(t)}{dt}+v_g(t)=(5\times10^{-3})K_0 s\, e^{st}+K_0\, e^{st}=0$$

$$\Rightarrow (5\times10^{-3})s+1=0$$ (characteristic equation)

$s = -200$

$v_g(t) = K_0\, e^{-200t}$ where K_0 is an unknown constant.

Ch7. III. First-Order response with a sinusoidal source. (Not on the exam)

Example 1: Find the voltage across the capacitor for t > 0 (given $v_C(0^-) = 1$ V)

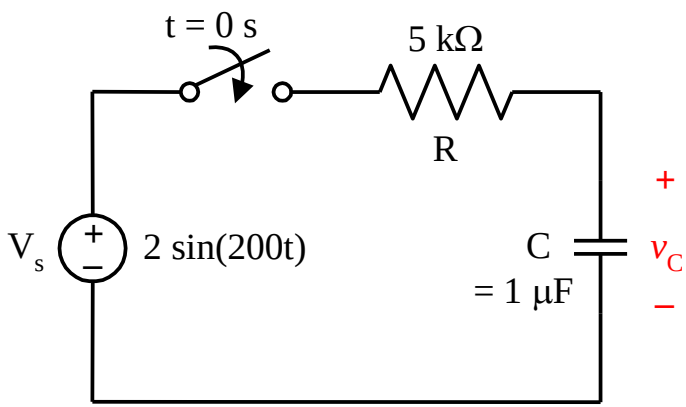

Particular Solution:

$$\boxed{\Rightarrow (5\times10^{-3})\frac{dv_p(t)}{dt} + v_p(t) = 2\sin(200t)}$$

Assume that $v_p(t) = K_1 \sin(200t) + K_2 \cos(200t)$

$$\boxed{\begin{aligned}\Rightarrow (5\times10^{-3})\left[200K_1\cos(200t) - 200K_2\sin(200t)\right] \\ +\left[K_1\sin(200t) + K_2\cos(200t)\right] = 2\sin(200t)\end{aligned}}$$

equating coefficients of sine and cosine terms:

$$\begin{cases} K_1 - K_2 = 2 \\ K_1 + K_2 = 0 \end{cases}$$

$$\Rightarrow K_1 = 1,\ K_2 = -1$$

Ch7. III. First-Order response with a sinusoidal source. (Not on the exam)

Example 1: Find the voltage across the capacitor for t > 0 (given $v_C(0^-) = 1$ V)

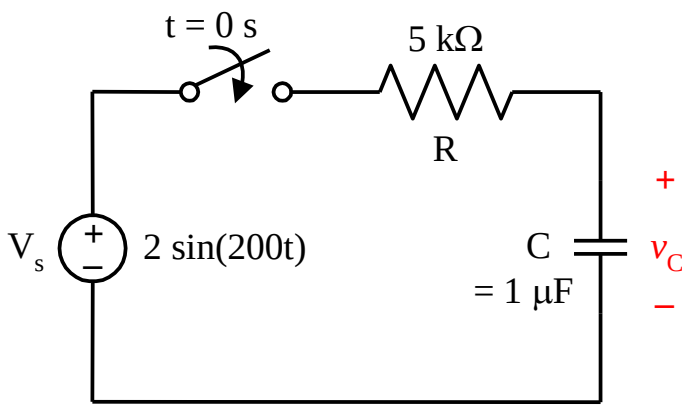

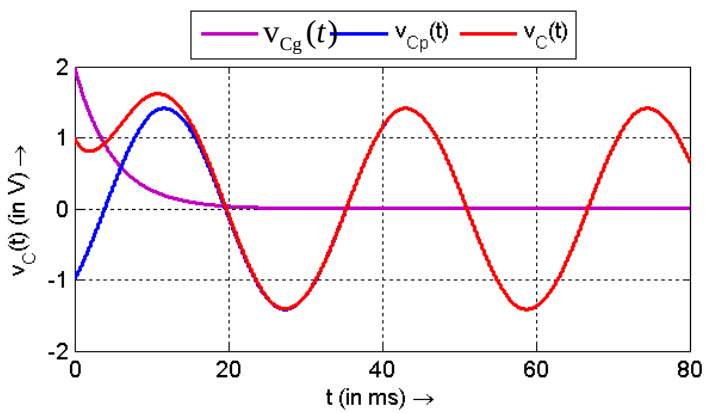

The complete solution is given by:

$$v(t) = v_p(t) + v_g(t)$$

$$v_C(t) = K_0\, e^{-200t} + \sin(200t) - \cos(200t).$$

Constant K_0 can now be evaluated from initial conditions as follows:

$$\Rightarrow v_C(0^+) = K_0 - 1 \qquad (\text{But } v_C(0^+) = v_C(0^-) = 1)$$

$$\Rightarrow K_0 = 2$$

$$\boxed{v_C(t) = 2\, e^{-200t} + \sin(200t) - \cos(200t)}$$

Ch9. I. Sinusoids and Mathematics

BASIC TRIGONOMETRY

ESSENTIAL IDENTITIES

$$\sin(\alpha+\beta)=\sin\alpha\cos\beta+\cos\alpha\sin\beta$$

$$\cos(\alpha+\beta)=\cos\alpha\cos\beta-\sin\alpha\sin\beta$$

$$\sin(-\alpha)=-\sin\alpha$$

$$\cos(-\alpha)=\cos\alpha$$

SOME DERIVED IDENTITIES

$$\sin(\alpha-\beta)=\sin\alpha\cos\beta-\cos\alpha\sin\beta$$

$$\cos(\alpha-\beta)=\cos\alpha\cos\beta+\sin\alpha\sin\beta$$

$$\sin\alpha\cos\beta=\frac{1}{2}\sin(\alpha+\beta)+\frac{1}{2}\sin(\alpha-\beta)$$

$$\cos\alpha\cos\beta=\frac{1}{2}\cos(\alpha+\beta)+\frac{1}{2}\cos(\alpha-\beta)$$

$$\cos\omega t=\sin(\omega t+\frac{\pi}{2})$$

$$\sin\omega t=\cos(\omega t-\frac{\pi}{2})$$

$$\cos\omega t=-\cos(\omega t\pm\pi)$$

$$\sin\omega t=-\sin(\omega t\pm\pi)$$

RADIANS AND DEGREES

2π radians = 360 degrees

$$\theta(\text{rads})=\frac{180}{\pi}\theta\ (\text{degrees})$$

ACCEPTED EE CONVENTION

$$\sin(\omega \boldsymbol{t}+\frac{\pi}{2})=\sin(\omega \boldsymbol{t}+90^\circ)$$

Ch9. I. Sinusoids

- A sinusoid is a signal that has the form of the sine or cosine function.
- A general expression for the sinusoid,

$$v(t) = V_m \sin(\omega t + \phi)$$

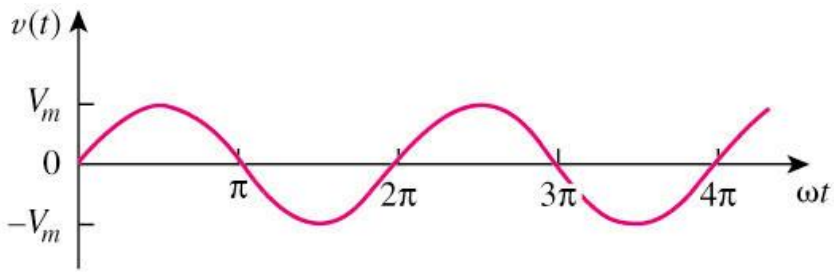

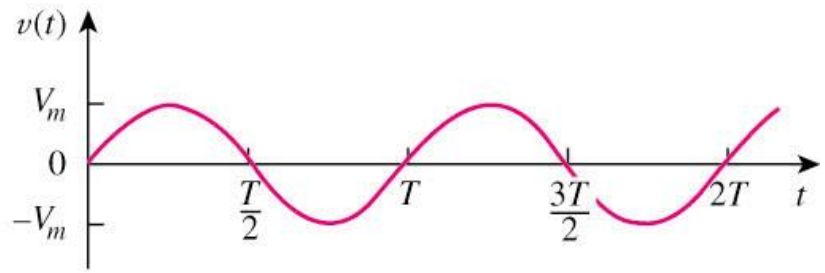

where

Vm = the **amplitude** of the sinusoid

ω = the angular frequency in radians/s

Φ = the phase

Ch9. I. Sinusoids

A <u>periodic function</u> is one that satisfies *v(t) = v(t + nT)*, for all t and for all integers n.

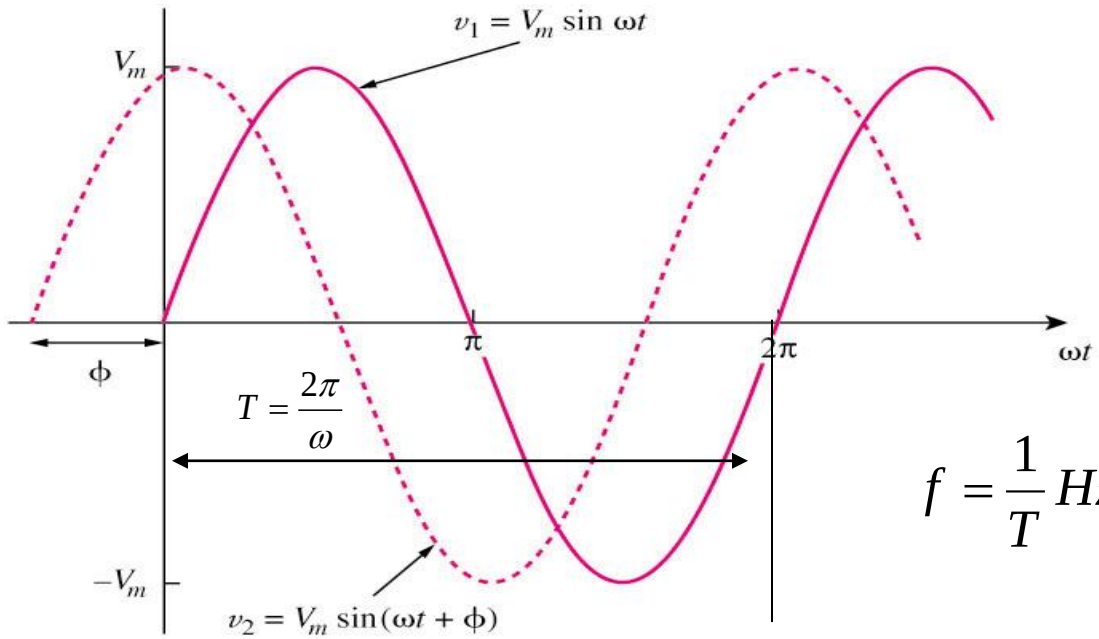

$$f = \frac{1}{T}\,\text{Hz} \qquad \omega = 2\pi f$$

- Only two sinusoidal values with the <u>same frequency</u> can be compared by their amplitude and phase difference.
- If phase difference is zero, they are in phase; if phase difference is not zero, they are out of phase.

Ch9. I. Sinusoids

Example 1

Given a sinusoid, $5\sin(4\pi t - 60^o)$, calculate its amplitude, phase, angular frequency, period, and frequency.

Solution:

Amplitude = 5, phase = -60°, angular frequency = 4π rad/s, Period = 0.5 s, frequency = 2 Hz.

Ch9. I. Sinusoids

Example 2

Find the phase angle between $i_1 = -4\sin(377t + 25^o)$ and $i_2 = 5\cos(377t - 40^o)$, does i_1 lead or lag i_2?

Solution:

Since $\sin(\omega t+90^o) = \cos \omega t$

$$i_2 = 5\sin(377t - 40^o + 90^o) = 5\sin(377t + 50^o)$$

$$i_1 = -4\sin(377t + 25^o) = 4\sin(377t + 180^o + 25^o) = 4\sin(377t + 205^o)$$

therefore, i_1 leads i_2 by 155°.

Ch9. II. Phasors and Complex Numbers

› A phasor is a complex number that represents the amplitude and phase of a sinusoid.

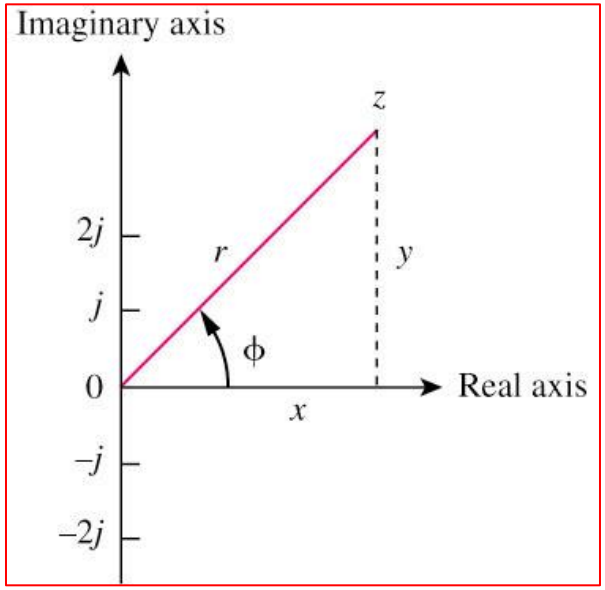

› Complex numbers can be represented in one of the following three forms:

a. Rectangular $z = x + jy = r(\cos\phi + j\sin\phi)$

b. Polar $z = r\angle\phi$

c. Exponential $z = re^{j\phi}$

where $r = \sqrt{x^2 + y^2}$

$\phi = \tan^{-1}\dfrac{y}{x}$

Ch9. II. Phasors and Complex Numbers

Mathematic operation of complex number:

1. Addition

$$z_1 + z_2 = (x_1 + x_2) + j(y_1 + y_2)$$

2. Subtraction

$$z_1 - z_2 = (x_1 - x_2) + j(y_1 - y_2)$$

3. Multiplication

$$z_1 z_2 = r_1 r_2 \angle \phi_1 + \phi_2$$

4. Division

$$\frac{z_1}{z_2} = \frac{r_1}{r_2} \angle \phi_1 - \phi_2$$

5. Reciprocal

$$\frac{1}{z} = \frac{1}{r} \angle -\phi$$

6. Square root

$$\sqrt{z} = \sqrt{r} \angle \phi/2$$

7. Complex conjugate

$$z^* = x - jy = r \angle -\phi = re^{-j\phi}$$

8. Euler's identity

$$e^{\pm j\phi} = \cos\phi \pm j\sin\phi$$

Ch9. II. Phasors and Complex Numbers

Example 1: Express $\dfrac{3+4j}{1+2j}$ in rectangular, exponential and polar form.

Method 1: Work in polar form.

$$\frac{3+4j}{1+2j}=\frac{5\angle 53.1301^\circ}{\sqrt{5}\angle 63.4349^\circ}=\sqrt{5}\angle\left(53.1301^\circ-63.4349^\circ\right)=\sqrt{5}\angle -10.0348^\circ$$

Angles in degrees

Method 2: Work in exponential form.

$$\frac{3+4j}{1+2j}=\frac{5e^{j0.9273}}{\sqrt{5}e^{j1.1071}}=\sqrt{5}e^{j(0.9273-1.1071)}=\sqrt{5}e^{j(-0.1798)}$$

Angles in radians

Method 3: Work in rectangular form.

$$\frac{3+4j}{1+2j}=\frac{3+4j}{1+2j}\cdot\frac{1-2j}{1-2j}=\frac{(3+8)+j(4-6)}{5}=\frac{11-j2}{5}=2.2-0.4j$$

Ch9. II. Phasors and Complex Numbers

Example 2

› Evaluate the following complex numbers: (try at home)

a. $[(5+j2)(-1+j4)-5\angle 60^{o}]$

b. $\dfrac{10+j5+3\angle 40^{o}}{-3+j4}+10\angle 30^{o}$

Solution:

a. −15.5 + j13.67

b. 8.293 + j2.2

Ch9. II. Phasors and Complex Numbers

Complex numbers in MATLAB.

MATLAB knows that j := i for engineers.

```
>> A = 5+2*j
>> B = -1+j*4
>> C = 5*exp(j*60*pi/180)
>> D = A*B-C
```

$$[(5+j2)(-1+j4)-5\angle 60^{o}]$$

```
>> angle(A)
```

gives phase of complex number in radians

```
>> abs(A)
```

gives magnitude of complex number

Ch9. III. Phasor Transform

The Phasor Transform transforms real cosine signals into complex exponential signals. There is a simple one-to-one mapping between any cosine signal and the corresponding complex exponential signal.

$$V_{\mathrm{m}}\cos(\omega t+\theta) \longleftrightarrow V_{\mathrm{m}}e^{j(\omega t+\theta)}$$

$$V_{\mathrm{m}}\cos(\omega t+\theta) = \mathrm{Re}\left\{V_{\mathrm{m}}e^{j(\omega t+\theta)} = V_{\mathrm{m}}\cos(\omega t+\theta) + jV_{\mathrm{m}}\sin(\omega t+\theta)\right\}$$

Depending on your point of view: Because electrical engineers are lazy, sloppy mathematicians; or because they like simple notation: they refuse to write it like this. Instead, they drop the jωt term and write:

$$V_{\mathrm{m}}\cos(\omega t+\theta) \leftrightarrow V_{\mathrm{m}}\angle\theta$$

Ch9. III. Phasor Transform

So to repeat, a phasor transform is a transform from the time domain into the phasor (complex number) domain. In particular, it transforms cosine time signals into phasors. Notice we 'lose' the frequency in the transform.

Forward Phasor Transform

$$\mathcal{P}\left\{V_{\mathrm{m}}\cos(\omega t+\theta)\right\}=V_{\mathrm{m}}\angle\theta$$

Inverse Phasor Transform

$$\mathcal{P}^{-1}\left\{V_{\mathrm{m}}\angle\theta,\omega\right\}=V_{\mathrm{m}}\cos(\omega t+\theta)$$

Always remember, it is best to 'think' of the phasor transform in the following way: We are really just making our signals complex and then taking the real part to get back to a cosine signal.

$$V_{\mathrm{m}}\cos(\omega t+\theta)=\mathrm{Re}\left\{V_{\mathrm{m}}e^{j(\omega t+\theta)}\right\}$$

Ch9. III. Phasor Transform

Time domain | Phasor domain

$$v(t) = V_m \cos(\omega t + \phi) \longleftrightarrow V = V_m \angle \phi$$

- Amplitude and phase difference are two principal concerns in the study of voltage and current sinusoids.
- The Phasor Transform will be defined from the cosine function in all our work. If a voltage or current expression is in the form of a sine, it will be changed to a cosine by adding/subtracting 90° from the phase.

$$\sin \omega t = \cos(\omega t - \frac{\pi}{2})$$

$$-\sin \omega t = \cos(\omega t + \frac{\pi}{2})$$

Ch9. III. Phasor Transform

Example 1

Transform the following sinusoids to phasors:

$i = 6\cos(50t - 40^o)$ A

$v = -4\sin(30t + 50^o)$ V

Solution:

a. $\mathrm{I} = 6\angle -40^\circ$ A

b. Since $-\sin(A) = \cos(A+90^o)$;

$v(t) = 4\cos(30t+50^o+90^o) = 4\cos(30t+140^o)$ V

Transform to phasor => $\mathrm{V} = 4\angle 140^\circ$ V

Ch9. III. Phasor Transform

Example 2

Perform an inverse phasor transform (let ω be arbitrary):

a. $\mathbf{V} = -10\angle 30^\circ \ \text{V}$

b. $\mathbf{I} = \text{j}(5 - \text{j}12) \ \text{A}$

Solution:

a) $v(t) = 10\cos(\omega t + 210^o)$ V

b) Since $\mathbf{I} = 12 + \text{j}5 = \sqrt{12^2 + 5^2} \angle \tan^{-1}(\frac{5}{12}) = 13\angle 22.62^\circ$

$i(t) = 13\cos(\omega t + 22.62^o)$ A

Ch9. IV. Phasors as Rotating Vectors

$$\boldsymbol{V} = V_m e^{j\theta} = V_m \angle\theta = V_m \cos(\theta) + jV_m \sin(\theta)$$

It is convenient to think of $v(t) = V_m \cos(\omega t+\theta)$ as the real part of a vector of length V_m that rotates counterclockwise in the complex plane with an angular velocity of ω rad/s, starting from an initial angle of θ.

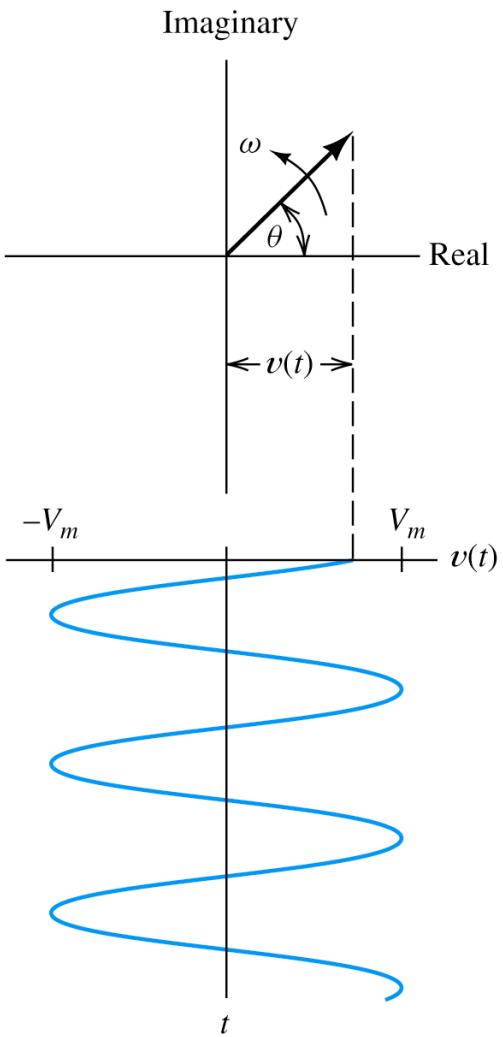

Ch9. IV. Phasors as Rotating Vectors

Phasor addition of sinusoidal signals

Consider $v_3(t) = v_1(t) + v_2(t)$

where $v_1(t) = 3\cos(\omega t + 40^o)$

$v_2(t) = 4\cos(\omega t - 20^o)$

As phasors, we have:

$$\boldsymbol{V}_1 = 3e^{j40^o}, \boldsymbol{V}_2 = 4e^{-j20^o}$$

$$\boldsymbol{V}_3 = 3e^{j40^o} + 4e^{-j20^o}$$

$$\approx (2.2981 + j1.9284) + (3.7588 - j1.3681)$$

$$= 6.0569 + j0.5603 \approx 6.0828e^{j5.285^o}$$

$$\Rightarrow v_3(t) \approx 6.0828\cos(\omega t + 5.285^o)$$

Time picture

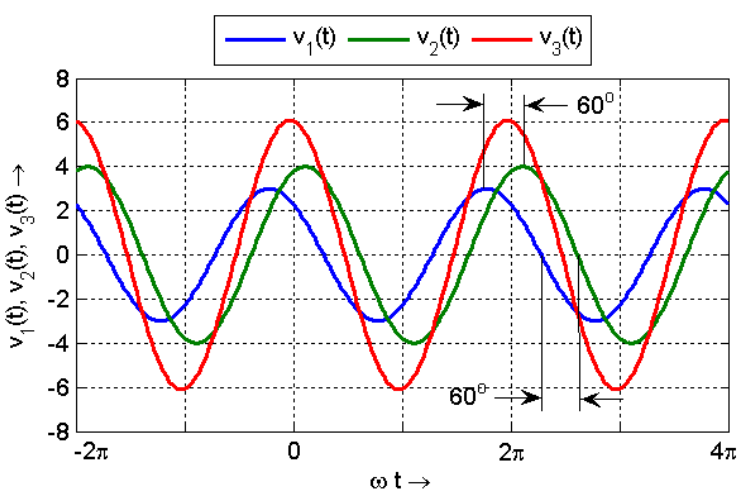

Phasor picture is simpler: V_1 leads V_2 by 60°

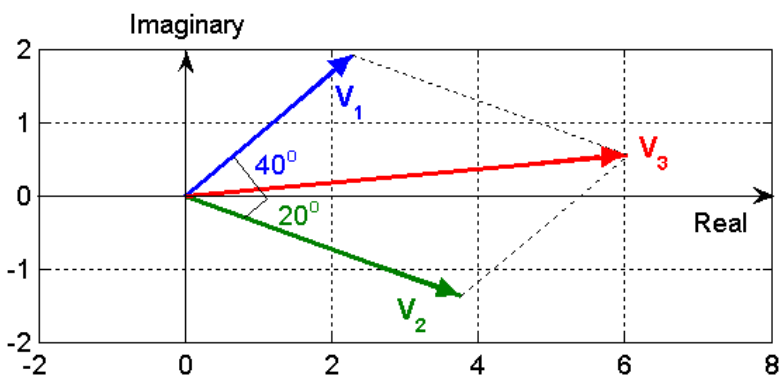

Ch9. V. Phasor Transform simplifies Derivatives and Integrals

The magic:

Avoid differential equations by transforming all resistors, capacitors and inductors into the phasor domain. Use complex numbers to solve the circuit.

$$v(t) = V_{\mathrm{m}} \cos(\omega t + \varphi) = \mathrm{Re}\left\{V_{\mathrm{m}} e^{j(\omega t + \varphi)}\right\} \longleftrightarrow V = V_{\mathrm{m}} \angle \varphi$$

$$\frac{dv}{dt} = \mathrm{Re}\left\{\frac{d}{dt} V_{\mathrm{m}} e^{j(\omega t + \varphi)}\right\} = \mathrm{Re}\left\{j\omega V_{\mathrm{m}} e^{j(\omega t + \varphi)}\right\} \longleftrightarrow j\omega V_{\mathrm{m}} \angle \varphi$$

$$\int v dt = \mathrm{Re}\left\{\int V_{\mathrm{m}} e^{j(\omega t + \varphi)} dt\right\} = \mathrm{Re}\left\{\frac{V_{\mathrm{m}}}{j\omega} e^{j(\omega t + \varphi)}\right\} \longleftrightarrow \frac{V_{\mathrm{m}} \angle \varphi}{j\omega}$$

Ch9. V. Phasor Transform simplifies Derivatives and Integrals

Example 1: Using the phasor approach, determine the current *i(t)* in a circuit described by the integro-differential equation.

$$4i + 8\int i\,dt - 3\frac{di}{dt} = 50\cos(2t + 75°)$$

Answer:

1. $4i(t) + \frac{8}{j2}i(t) - 3j2i(t) = 50\cos(2t + 75°)$

2. $\left(4 + \frac{4}{j} - 6j\right)i(t) = 50\cos(2t + 75°)$

3. $(4 - 10j)i(t) = 50\cos(2t + 75°)$

4. $\left(10.7703\angle -68.1986°\right)i(t) = 50\cos(2t + 75°)$

5. $i(t) = \frac{50}{10.7703}\cos(2t + (75 + 68.199)°)$

i(t) = 4.642cos(2t + 143.2°) A

Ch9. VI. Resistors in the Phasor Domain

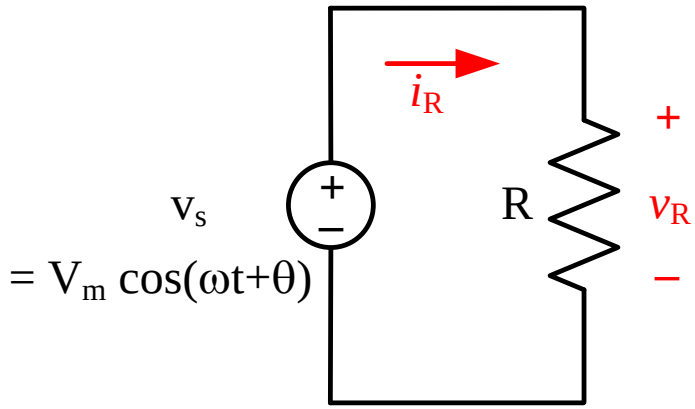

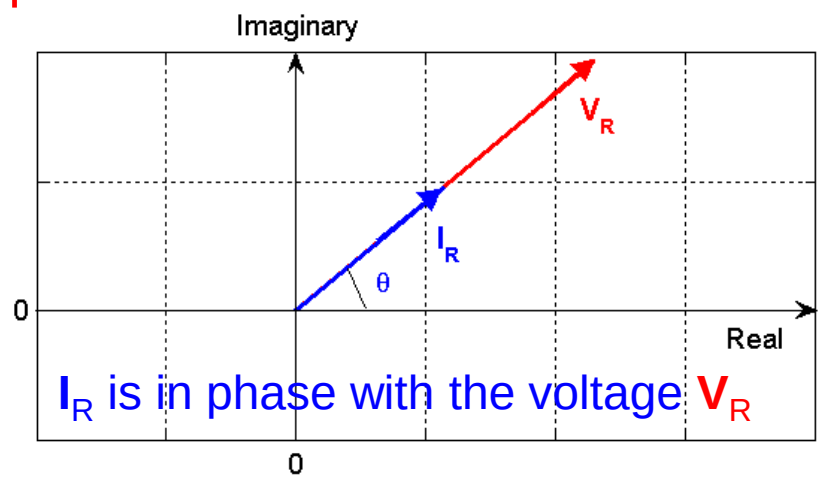

Time Domain

$$v_R(t) = \mathrm{Re}\left\{V_m e^{j(\omega t+\theta)}\right\}$$

$$i_R(t) = \frac{v_R(t)}{R} = \mathrm{Re}\left\{\frac{V_m}{R} e^{j(\omega t+\theta)}\right\}$$

Phasor Domain

$$\boldsymbol{V}_R = V_m \angle\theta$$

$$\boldsymbol{I}_R = \frac{\boldsymbol{V}_R}{R}$$

$$\boldsymbol{V}_R = R\boldsymbol{I}_R$$

Ch9. VI. Capacitors in the Phasor Domain

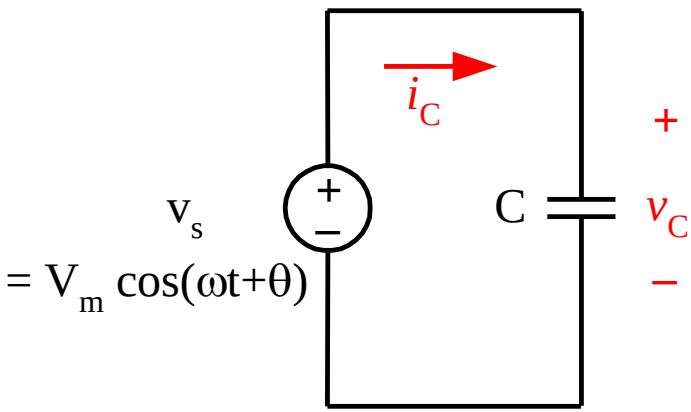

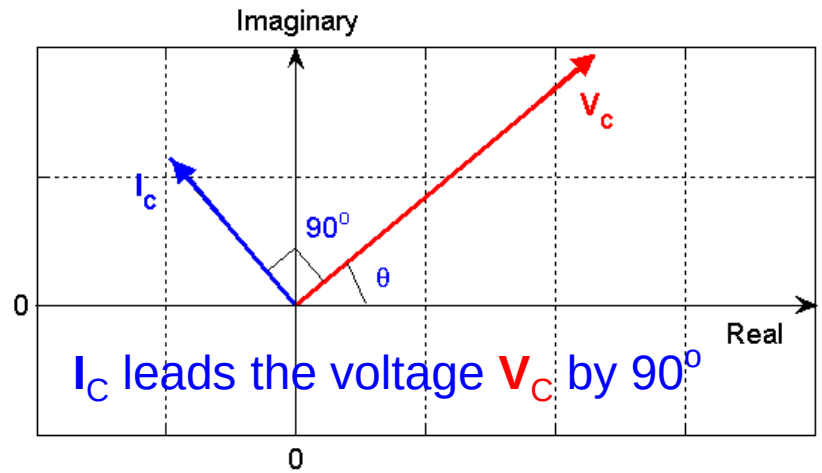

Time Domain

$$v_C(t) = \mathrm{Re}\left\{V_m e^{j(\omega t+\theta)}\right\}$$

$$i_C(t) = C\frac{dv_C(t)}{dt} = \mathrm{Re}\left\{j\omega C V_m e^{j(\omega t+\theta)}\right\}$$

$$i_C(t) = \omega C V_m \cos(\omega t + \theta + 90^o)$$

Phasor Domain

$$\boldsymbol{V}_C = V_m \angle\theta$$

$$\boldsymbol{I}_C = j\omega C \boldsymbol{V}_C$$

$$\boldsymbol{V}_C = \frac{\mathbf{I}_C}{j\omega C}$$

Ch9. VI. Inductors in the Phasor Domain

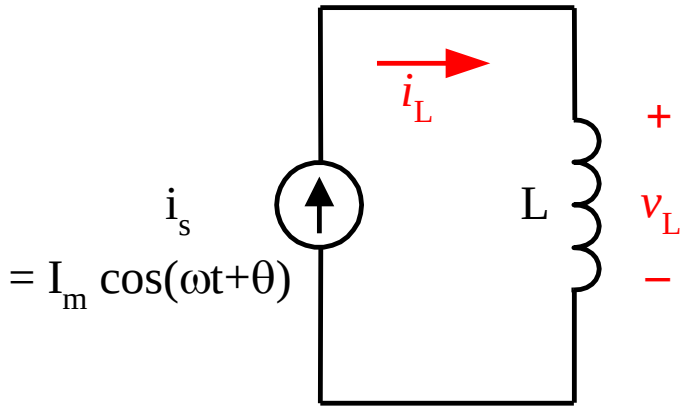

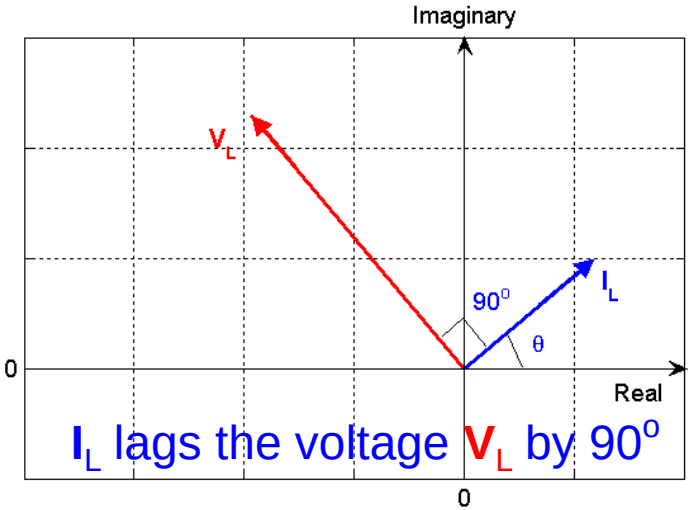

Time Domain

$$i_L(t) = \mathrm{Re}\left\{ I_m e^{j(\omega t+\theta)} \right\}$$

$$v_L(t) = L\frac{di_L(t)}{dt} = \mathrm{Re}\left\{ j\omega L I_m e^{j(\omega t+\theta)} \right\}$$

$$v_L(t) = \omega L I_m \cos(\omega t + \theta + 90^o)$$

Phasor Domain

$$\boldsymbol{I}_L = I_m \angle\theta$$

$$\boldsymbol{V}_L = j\omega L\, \boldsymbol{I}_L$$

Ch9. VI. Circuit Elements in the Phasor Domain

Summary:

Resistor:

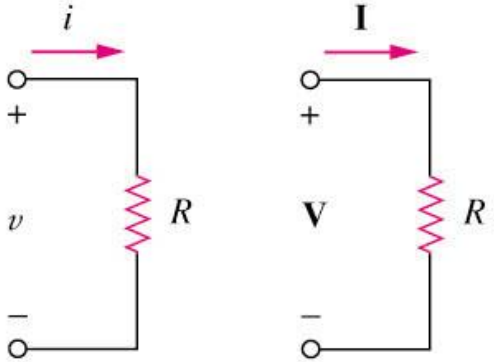

Inductor:

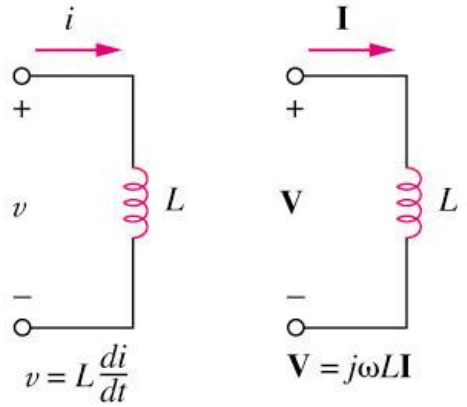

Capacitor:

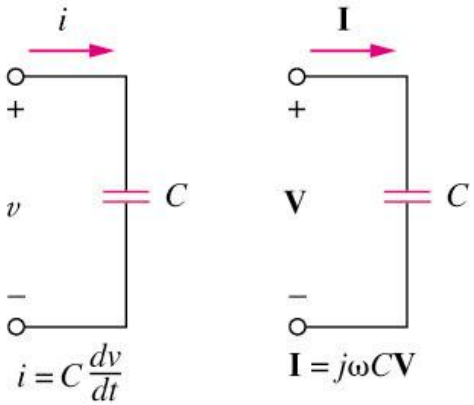

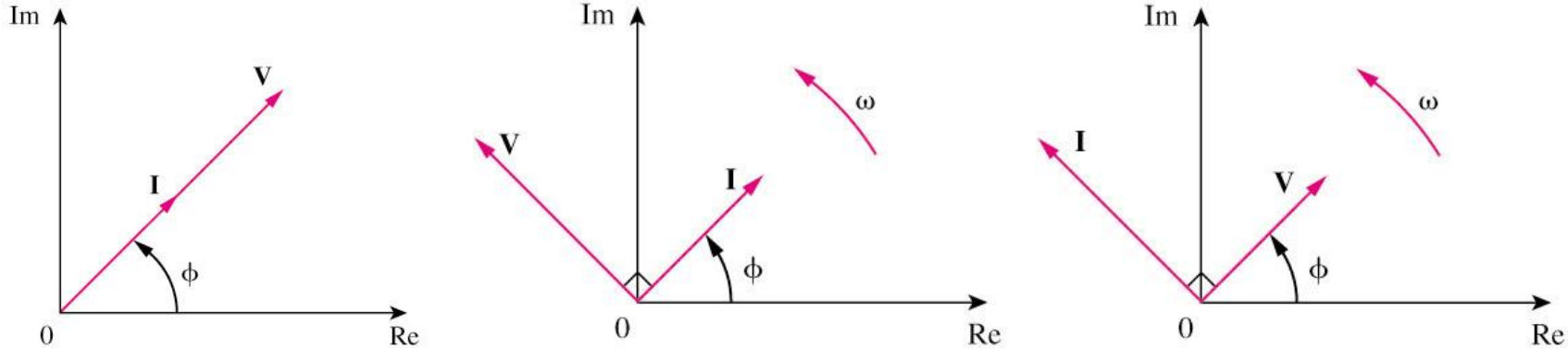

Ch9. VII. Impedance and Admittance

- The impedance Z of a circuit is the ratio of the phasor voltage V to the phasor current I, measured in ohms Ω.

$$Z = \frac{V}{I} = R + jX$$

where R is Real and is referred to as the resistance and X = Imaginary and referred to as the reactance. Positive X is for L and negative X is for C.

- The admittance Y is the reciprocal of impedance, measured in siemens (S).

$$Y = \frac{1}{Z} = \frac{I}{V}$$

Ch9. VII. Impedance and Admittance

Summary of voltage-current relationship		
Element	Time domain	Phasor domain
R	$v = Ri$	$V = RI$
L	$v = L\dfrac{di}{dt}$	$V = j\omega LI$
C	$i = C\dfrac{dv}{dt}$	$V = \dfrac{I}{j\omega C}$

Ch9. VII. Impedance and Admittance

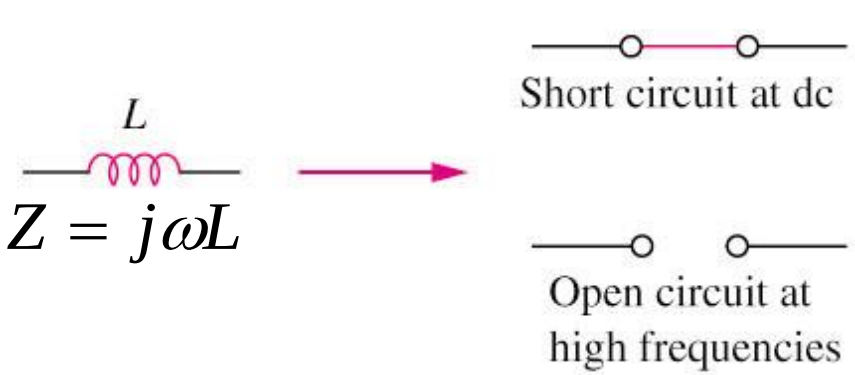

$$Z = j\omega L$$

$$\omega = 0; Z = 0$$

$$\omega \to \infty; Z \to \infty$$

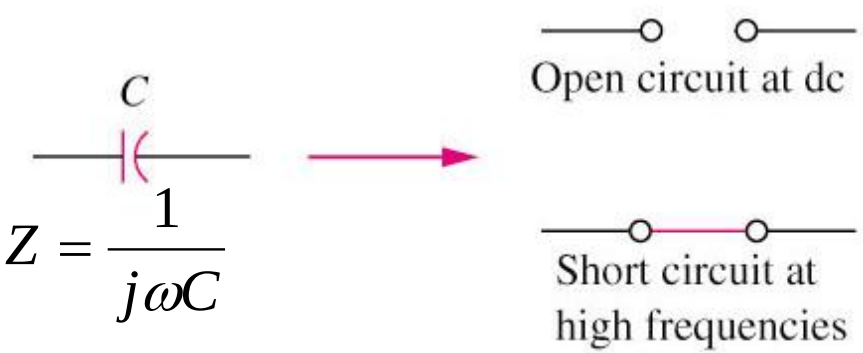

$$Z = \frac{1}{j\omega C}$$

$$\omega = 0; Z \to \infty$$

$$\omega \to \infty; Z = 0$$

Ch9. VIII. Solving Circuits in the Phasor Domain

Example 1: Find $v_c(t)$

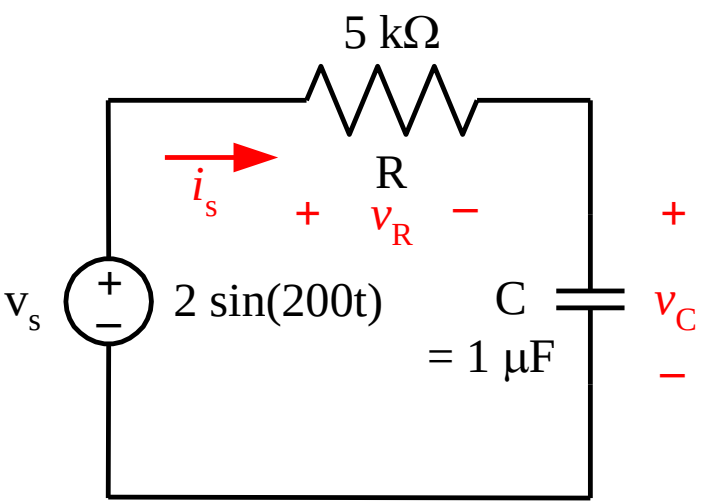

Step 1: Express circuit in Phasor Domain

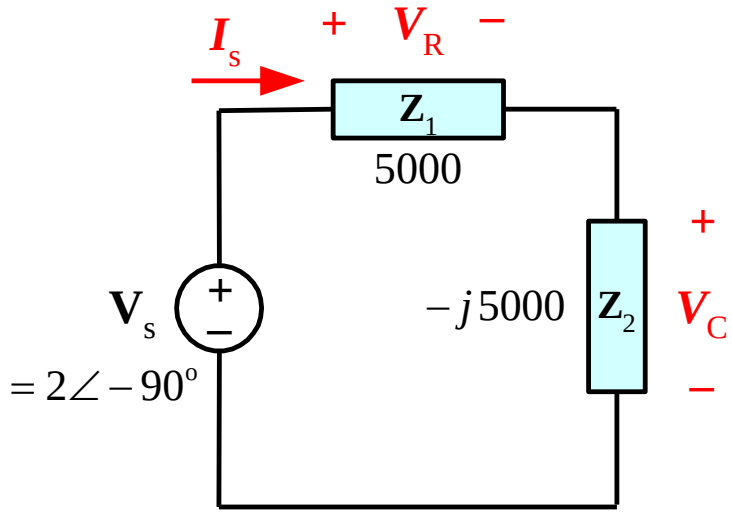

$$\boldsymbol{Z}_1 = R = 5000,\ \boldsymbol{Z}_2 = \frac{1}{j\omega C} = \frac{1}{j \cdot 200 \cdot 1e-6} = -j5000$$

Ch9. VIII. Solving Circuits in the Phasor Domain

Example 1 Continued

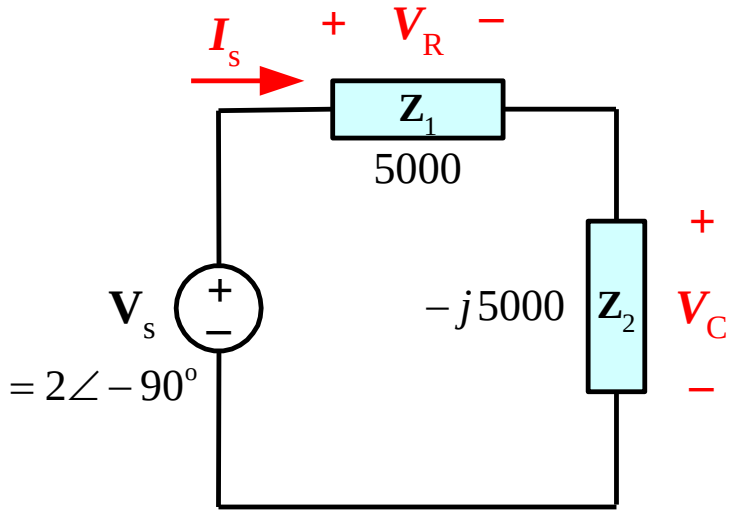

Step 2: Solve circuit using normal methods; treating Z as complex-valued resistors.

$$\boldsymbol{I}_s = \frac{\boldsymbol{V}_s}{(Z_1 + Z_2)}$$

$$\Rightarrow \boldsymbol{I}_s = \frac{\boldsymbol{V}_s}{(5000 - j5000)} = \frac{2\angle -90^o}{(5000 - j5000)}$$

$$= \frac{2}{5000}\frac{-j}{1-j} = \frac{1}{10000}\frac{1-j}{2} = 2\times 10^{-4}(1-j)$$

$$\Rightarrow \boldsymbol{V}_C = \boldsymbol{Z}_2\boldsymbol{I}_s = (-j5000)(2\times 10^{-4} - j2\times 10^{-4})$$

$$= -1 - j = \sqrt{2}\angle -135^o$$

Ch9. VIII. Solving Circuits in the Phasor Domain

Example 1 Continued

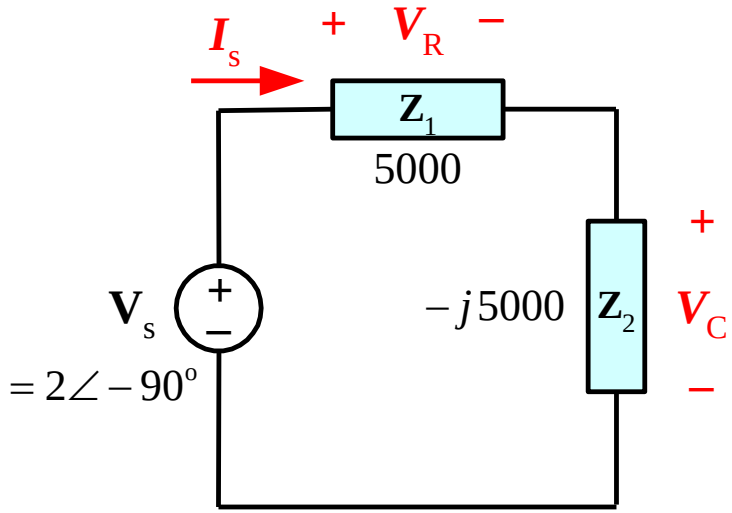

Step 3: Transform back to time domain.

$$V_C = -1 - j = \sqrt{2}\angle -135^o$$

$$\Rightarrow v_C(t) = \sqrt{2}\cos(200t - 135^o)$$
$$= \sqrt{2}\cos(200t)\cos(135^o) + \sqrt{2}\sin(200t)\sin(135^o)$$
$$= -\cos(200t) + \sin(200t)$$

Ch9. VIII. Solving Circuits in the Phasor Domain

Example 2 Find $i_c(t)$

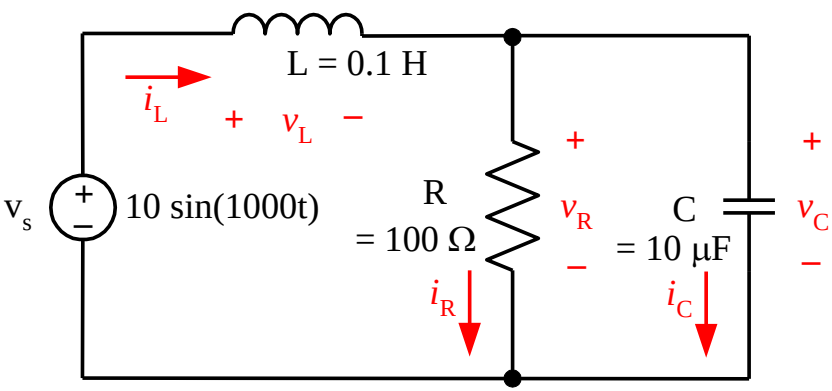

Step 1: Express circuit in Phasor Domain

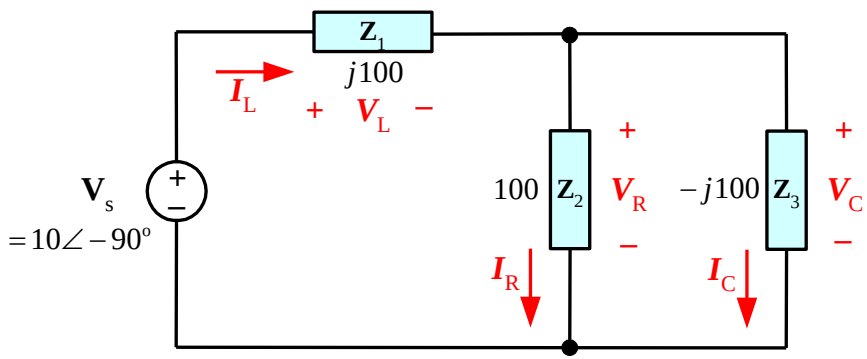

$$\Rightarrow \boldsymbol{V}_s = 10\angle -90^o \text{ and } \omega = 1000 \text{ rad/s}$$

and $\boldsymbol{Z}_1 = j\omega L = j100$, $\boldsymbol{Z}_2 = R = 100$,

$$\boldsymbol{Z}_3 = \frac{1}{j\omega C} = -j100$$

Ch9. VIII. Solving Circuits in the Phasor Domain

Example 2 Continued

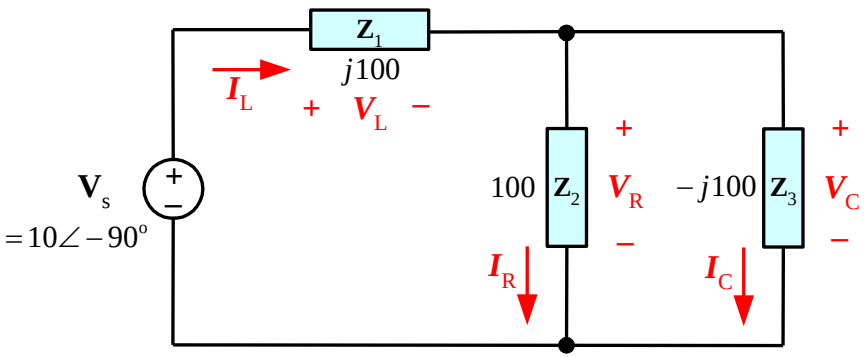

Step 2: Solve circuit using normal methods; treating Z as complex-valued resistors.

$$\boldsymbol{Z}_{eq} = \boldsymbol{Z}_1 + \left(\frac{1}{\boldsymbol{Z}_2} + \frac{1}{\boldsymbol{Z}_3}\right)^{-1}$$

$$= j100 + \left(\frac{1}{100} + \frac{1}{-j100}\right)^{-1} = j100 + \left(\frac{j+1}{100}\right)^{-1}$$

$$= j100 + \frac{100}{j+1} \cdot \frac{-j+1}{-j+1} = 50 + j50$$

$$\Rightarrow \boldsymbol{I}_L = \frac{\boldsymbol{V}_s}{\boldsymbol{Z}_{eq}} = \frac{\boldsymbol{V}_s}{(50 + j50)} = \frac{10\angle -90^o}{50 \cdot \sqrt{2}\angle 45^o}$$

$$= \frac{0.2}{\sqrt{2}}\angle -135^o = 0.1\sqrt{2}\angle -135^o = -0.1 - j0.1$$

Ch9. VIII. Solving Circuits in the Phasor Domain

Example 2 Continued

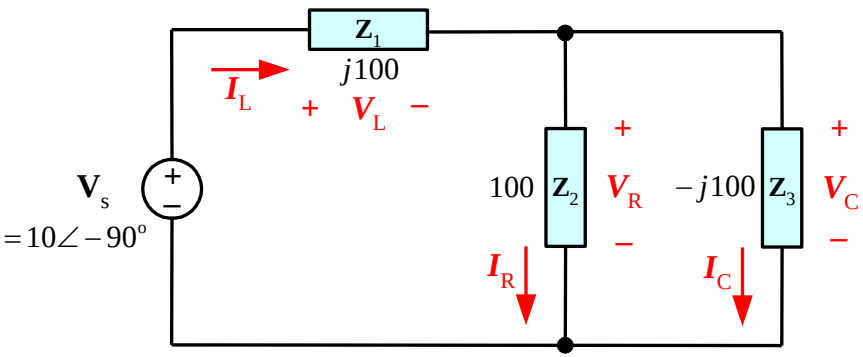

Step 2: Solve circuit using normal methods; treating Z as complex-valued resistors.

$$\boldsymbol{I}_L = -0.1(1-j)$$

$$\boldsymbol{V}_L = \boldsymbol{Z}_1\boldsymbol{I}_L = (j100)(-0.1-j0.1) = 10 - j10$$

$$\boldsymbol{V}_R = \boldsymbol{V}_C = \boldsymbol{V}_s - \boldsymbol{V}_L = (-j10) - (10 - j10)$$
$$= -10$$

$$\boldsymbol{I}_C = \frac{\boldsymbol{V}_C}{\boldsymbol{Z}_3} = \frac{-10}{-j100} = -j0.1 = 0.1\angle -90^o$$

Ch9. VIII. Solving Circuits in the Phasor Domain

Example 2 Continued

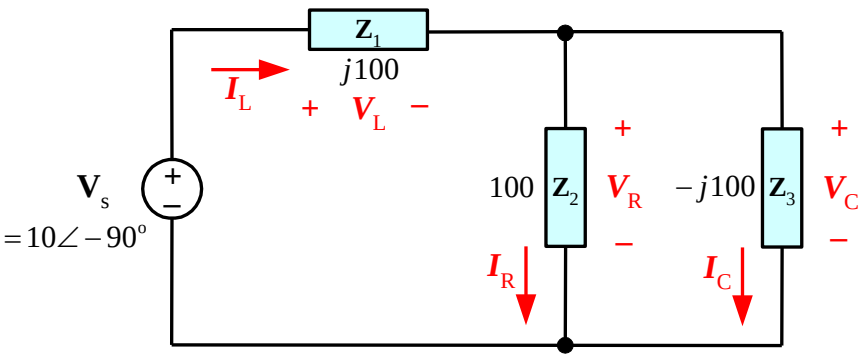

Step 3: Transform back to time domain.

$$\boldsymbol{I}_C = 0.1\angle -90^o$$

$$i_C(t) = 0.1\cos(1000t - 90^\circ)$$

$$i_C(t) = 0.1\sin(1000t)$$

Ch9. VIII. Solving Circuits in the Phasor Domain

Example 3: Determine the voltage $v_R(t)$

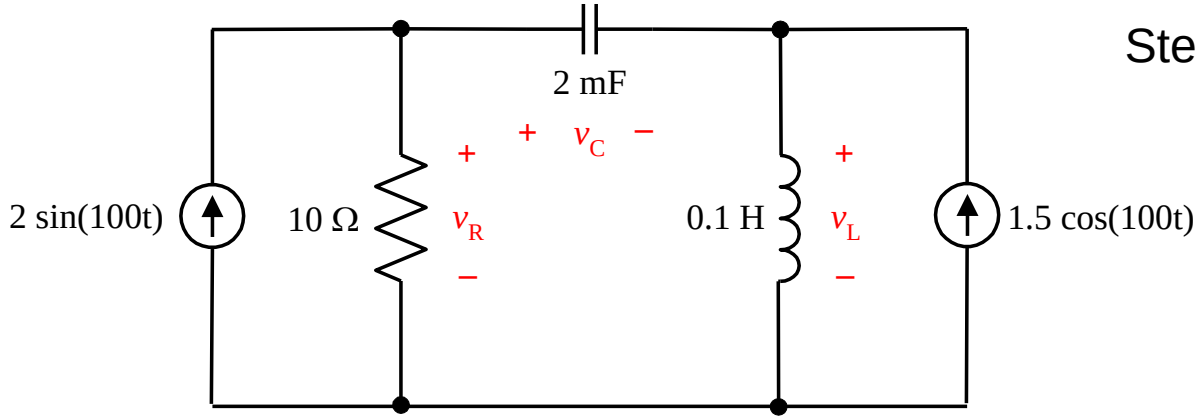

Step 1: Express circuit in the Phasor Domain

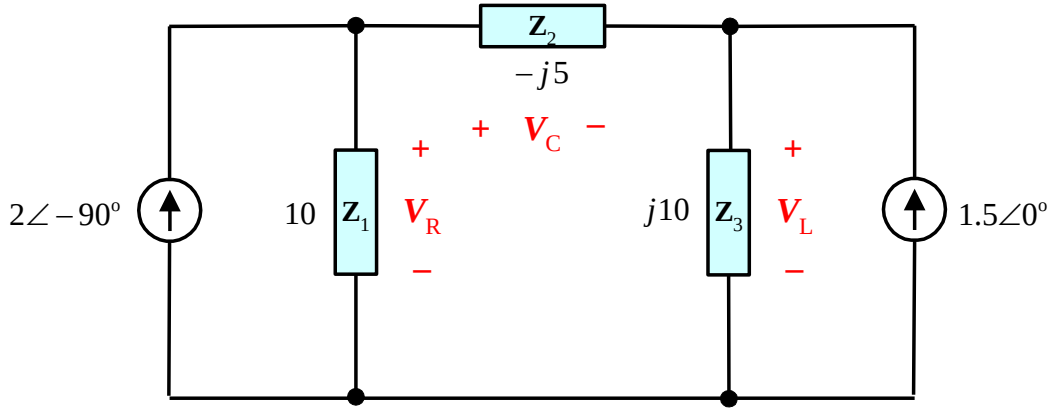

$$Z_C = \frac{1}{j \cdot 100 \cdot 0.002} = -j5$$

$$Z_L = j \cdot 100 \cdot 0.1 = j10$$

Ch9. VIII. Solving Circuits in the Phasor Domain

Example 3: Continued

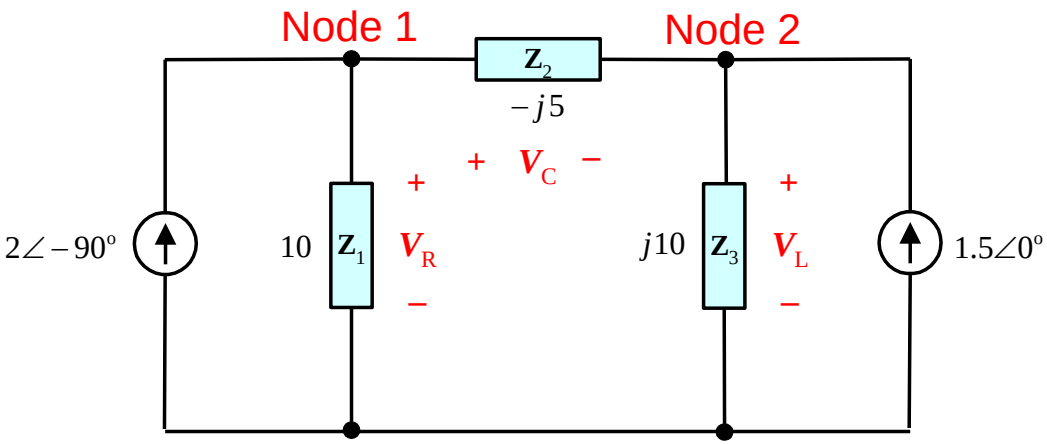

Step 2: Solve circuit treating Z as complex-valued resistors

KCL at node 1: $2\angle -90^o = \dfrac{\boldsymbol{V}_1}{10} + \dfrac{\boldsymbol{V}_1 - \boldsymbol{V}_2}{(-j5)}$

$$(1+2j)\boldsymbol{V}_1 - 2j\boldsymbol{V}_2 = -20j$$

KCL at node 2: $1.5\angle 0^o = \dfrac{\boldsymbol{V}_2}{(j10)} + \dfrac{\boldsymbol{V}_2 - \boldsymbol{V}_1}{(-j5)}$

$$-2j\boldsymbol{V}_1 + j\boldsymbol{V}_2 = 15$$

Ch9. VIII. Solving Circuits in the Phasor Domain

Example 3: Continued

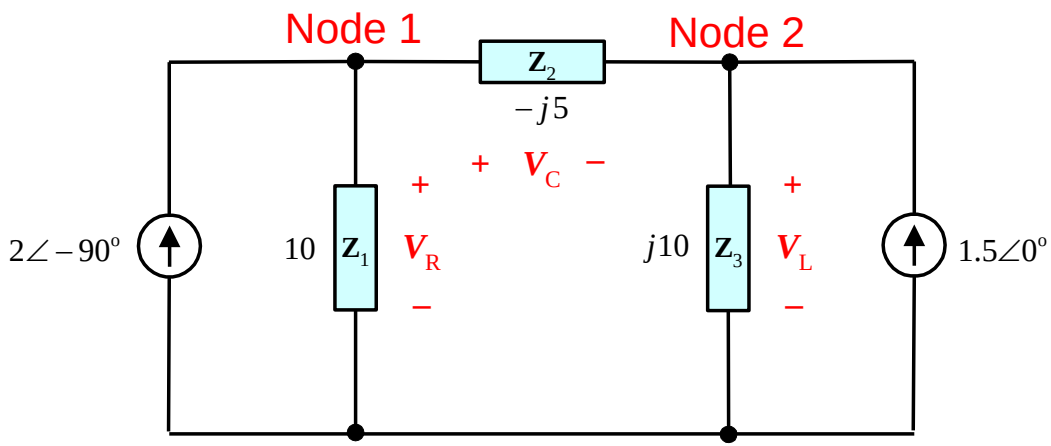

$$(1+2j)\boldsymbol{V}_1 - 2j\boldsymbol{V}_2 = -20j$$

$$-2j\boldsymbol{V}_1 + j\boldsymbol{V}_2 = 15$$

$$\begin{bmatrix} 1+2j & -2j \\ -2j & j \end{bmatrix} \begin{bmatrix} \boldsymbol{V}_1 \\ \boldsymbol{V}_2 \end{bmatrix} = \begin{bmatrix} -20j \\ 15 \end{bmatrix}$$

$$\begin{bmatrix} \boldsymbol{V}_1 \\ \boldsymbol{V}_2 \end{bmatrix} = \begin{bmatrix} 14+8j \\ 28+j \end{bmatrix}$$

$$\Rightarrow \boldsymbol{V}_R = \boldsymbol{V}_1 = 14 + j8 \approx 16.1245\angle 29.75^o$$

Ch9. VIII. Solving Circuits in the Phasor Domain

Example 3: Continued

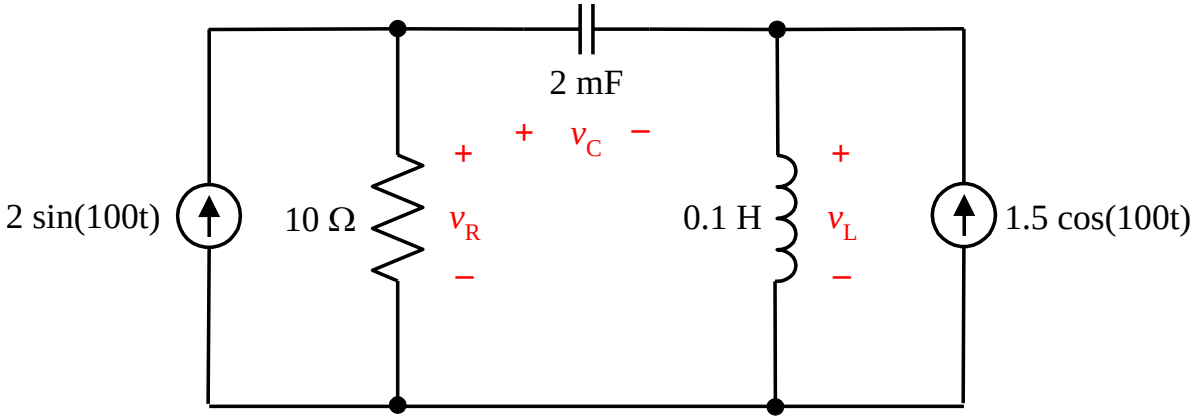

Step 3: Transform back to time domain.

$$\boldsymbol{V}_R = 14 + j8 \approx 16.1245\angle 29.75^{\circ}$$

$$\Rightarrow v_R(t) \approx 16.1245\cos(100t + 29.75^{\circ})$$

Ch10. I. Instantaneous Power

Consider the instantaneous power supplied by an AC circuit with complex impedance.

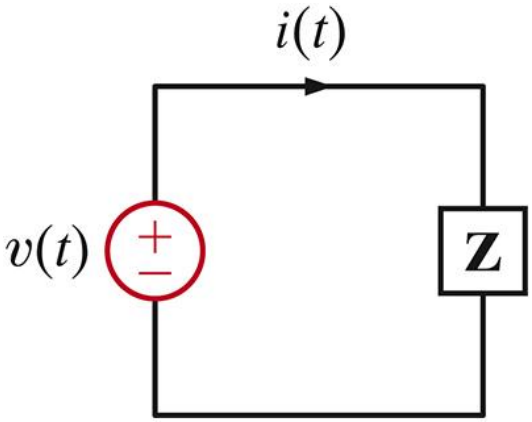

In steady State

$$v(t) = V_M \cos(\omega t + \theta_v)$$

$$i(t) = I_M \cos(\omega t + \theta_i)$$

Instantaneous Power Supplied to Impedance

$$p(t) = v(t)i(t)$$

$$p(t) = V_M I_M \cos(\omega t + \theta_v)\cos(\omega t + \theta_i)$$

Recalling that:

$$\cos\phi_1 \cos\phi_2 = \frac{1}{2}\left[\cos(\phi_1 - \phi_2) + \cos(\phi_1 + \phi_2)\right]$$

$$p(t) = \frac{V_M I_M}{2}\left[\cos(\theta_v - \theta_i) + \cos(2\omega t + \theta_v + \theta_i)\right]$$

constant

Twice the frequency

Ch10. I. Instantaneous Power

Example 1.

Assume: $v(t) = 4\cos(\omega t + 60°)$,

$Z = 2\angle 30° \Omega$

Find: $i(t), p(t)$

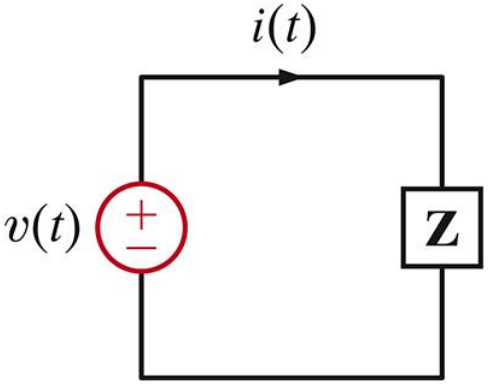

$$I = \frac{V}{Z} = \frac{4\angle 60°}{2\angle 30°} = 2\angle 30° (A)$$

$$i(t) = 2\cos(\omega t + 30°)(A)$$

$$V_M = 4, \theta_v = 60°$$
$$I_M = 2, \theta_i = 30°$$

$$p(t) = 4\cos 30° + 4\cos(2\omega t + 90°)$$

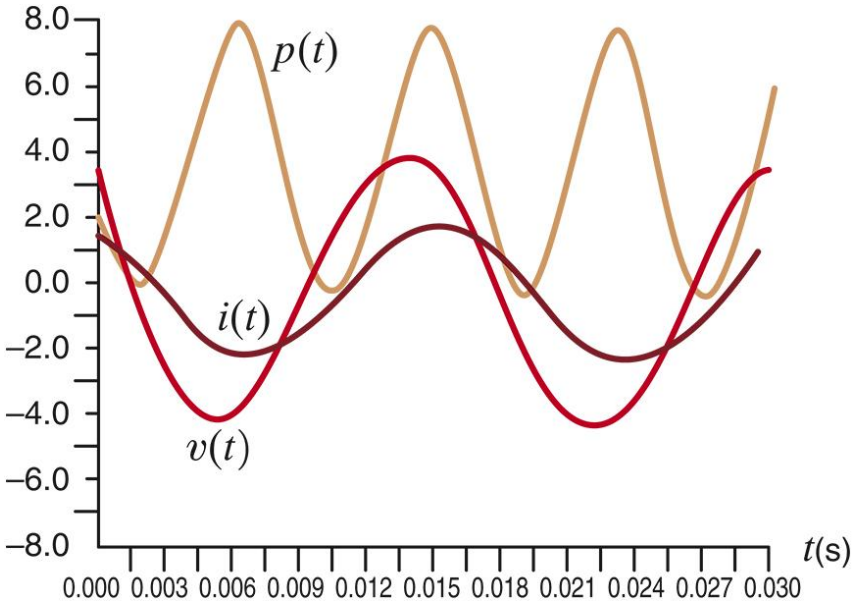

SINUSOIDAL AC POWER ANALYSIS

Ch10. I. Instantaneous Power

The instantaneous power, p(t)

$$p(t) = v(t)\,i(t) = V_m I_m \cos(\omega t + \theta_v)\cos(\omega t + \theta_i)$$

$$= \frac{1}{2} V_m I_m \cos(\theta_v - \theta_i) + \frac{1}{2} V_m I_m \cos(2\omega t + \theta_v + \theta_i)$$

Constant power **Sinusoidal power at 2ωt**

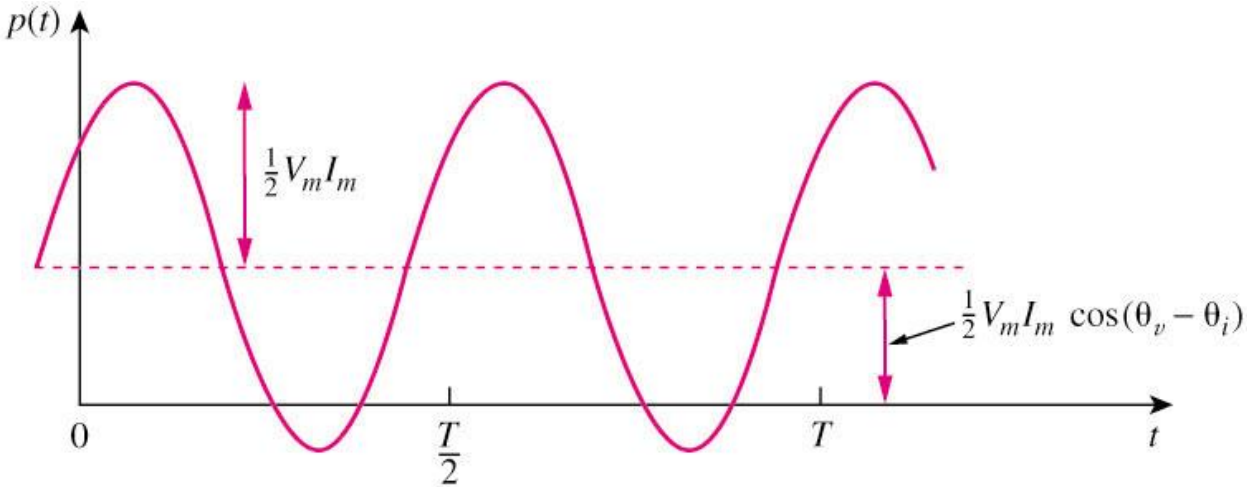

p(t) > 0: power is absorbed by the circuit; p(t) < 0: power is absorbed by the source.

Ch10. II. Average Power

The average power, P, *is the average of the instantaneous power over one period.*

$$P = \frac{1}{T}\int_0^T p(t)\,dt = \frac{1}{T}\int_0^T \frac{1}{2}\left[V_m I_m \cos(\theta_v - \theta_i) + \frac{1}{2} V_m I_m \cos(2\omega t + \theta_v + \theta_i)\right]dt$$

0

$$\boxed{P = \frac{1}{T}\int_0^T p(t)\,dt = \frac{1}{2} V_m I_m \cos(\theta_v - \theta_i)}$$

Ch10. II. Average Power

The average power, P, *is the average of the instantaneous power over one period.*

$$P = \frac{1}{T}\int_0^T p(t)\,dt = \frac{1}{2}V_m I_m \cos(\theta_v - \theta_i)$$

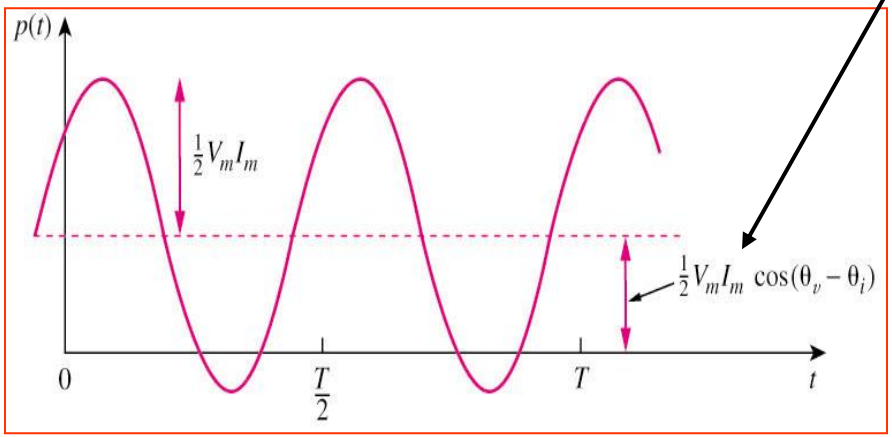

1. **P is not <u>time dependent</u>.**
2. **When $\theta_v = \theta_i$, it is a <u>purely resistive</u> load case.**
3. **When $\theta_v - \theta_i = \pm 90^\circ$, it is a <u>purely reactive</u> load case.**
4. **P = 0 means that the circuit absorbs <u>no average power</u>.**

Ch10. II. Average Power

$$v_{load}(t) = V_m \cos(\omega t + \theta_V)$$

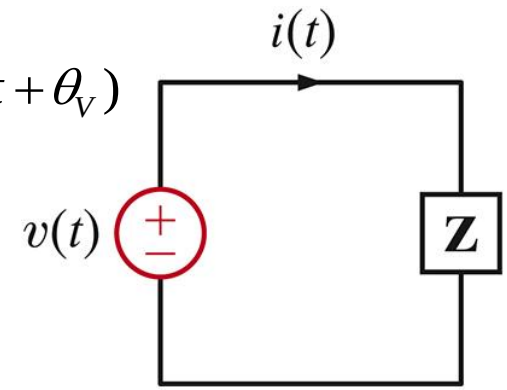

Resistor:

$$\underline{\boldsymbol{Z} = R}: \quad i_{load}(t) = I_m \cos(\omega t + \theta_V) \text{ and } I_m = (V_m / R)$$

$$\underline{\boldsymbol{Z} = R}: \quad p_R(t) = v_{load}(t)\, i_{load}(t) = V_m I_m \cos^2(\omega t + \theta_V)$$

$$\mathrm{P}_{avg} = \frac{1}{2} V_m I_m \cos(\theta_V - \theta_I) = \frac{1}{2} V_m I_m$$

Ch10. II. Average Power

$$v_{load}(t) = V_m \cos(\omega t + \theta_V)$$

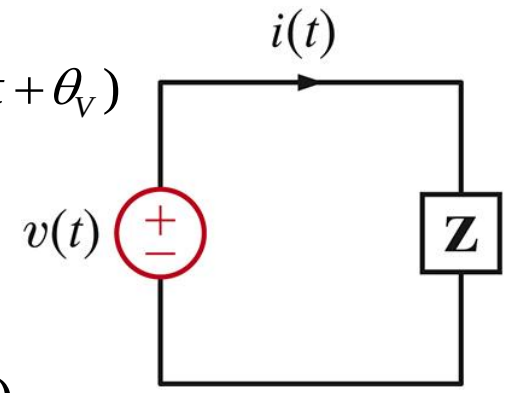

Inductor:

$$\underline{\boldsymbol{Z} = j\omega L}: \quad i_{load}(t) = I_m \cos(\omega t + \theta_V - 90^{\circ})$$

$$= I_m \sin(\omega t + \theta_V) \text{ and } I_m = (V_m / \omega L)$$

$$\underline{\boldsymbol{Z} = j\omega L}: \quad p_L(t) = v_{load}(t)\, i_{load}(t) = V_m I_m \cos(\omega t + \theta_V)\sin(\omega t + \theta_V) = \frac{V_m I_m}{2}\sin(2\omega t + 2\theta_V)$$

$$\mathrm{P}_{avg} = \frac{1}{2} V_m I_m \cos(\theta_V - \theta_I) = \frac{1}{2} V_m I_m \cos(90) = 0$$

$p_L(t)$ is periodic with the average value of 0. For half cycle, the energy is stored in the inductor and for the other half cycle the energy is returned to the source. In this case, we say that reactive power flows from the source to the load. Even though no average power flows, the transmission lines, transformers etc. must be capable of withstanding the current.

Ch10. II. Average Power

$$v_{load}(t) = V_m \cos(\omega t + \theta_V)$$

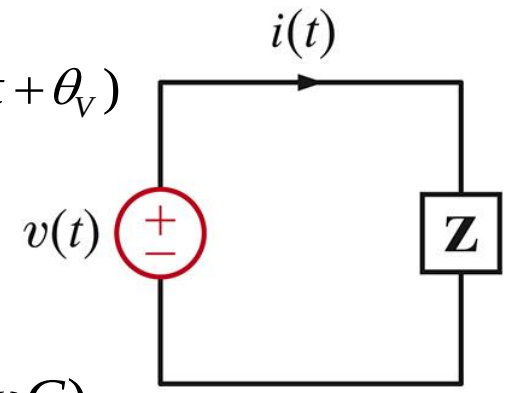

Capacitor:

$$\underline{\boldsymbol{Z} = (1/\, j\omega C)}: \quad i_{load}(t) = I_m \cos(\omega t + \theta_V + 90^{\circ})$$

$$= -I_m \sin(\omega t + \theta_V) \text{ and } I_m = (V_m \omega C)$$

$$\underline{\boldsymbol{Z} = (1/\, j\omega C)}: \; p_C(t) = v_{load}(t)\, i_{load}(t) = -V_m I_m \cos(\omega t + \theta_V)\sin(\omega t + \theta_V) = -\frac{V_m I_m}{2}\sin(2\omega t + 2\theta_V)$$

$$\mathrm{P}_{avg} = \frac{1}{2} V_m I_m \cos(\theta_V - \theta_I) = \frac{1}{2} V_m I_m \cos(-90) = 0$$

$p_C(t)$ is periodic with the average value of 0. For half cycle, the energy is stored in the capacitor and for the other half cycle the energy is returned to the source. In this case, we say that reactive power flows from the source to the load.

SINUSOIDAL AC POWER ANALYSIS

Ch10. II. Average Power

$\underline{\boldsymbol{Z} = R}$: $p_R(t) = V_m I_m \cos^2(\omega t + \theta_V)$

$\underline{\boldsymbol{Z} = (1/\, j\omega C)}$: $p_C(t) = -\dfrac{V_m I_m}{2}\sin(2\omega t + 2\theta_V)$

$\underline{\boldsymbol{Z} = j\omega L}$: $p_L(t) = \dfrac{V_m I_m}{2}\sin(2\omega t + 2\theta_V)$

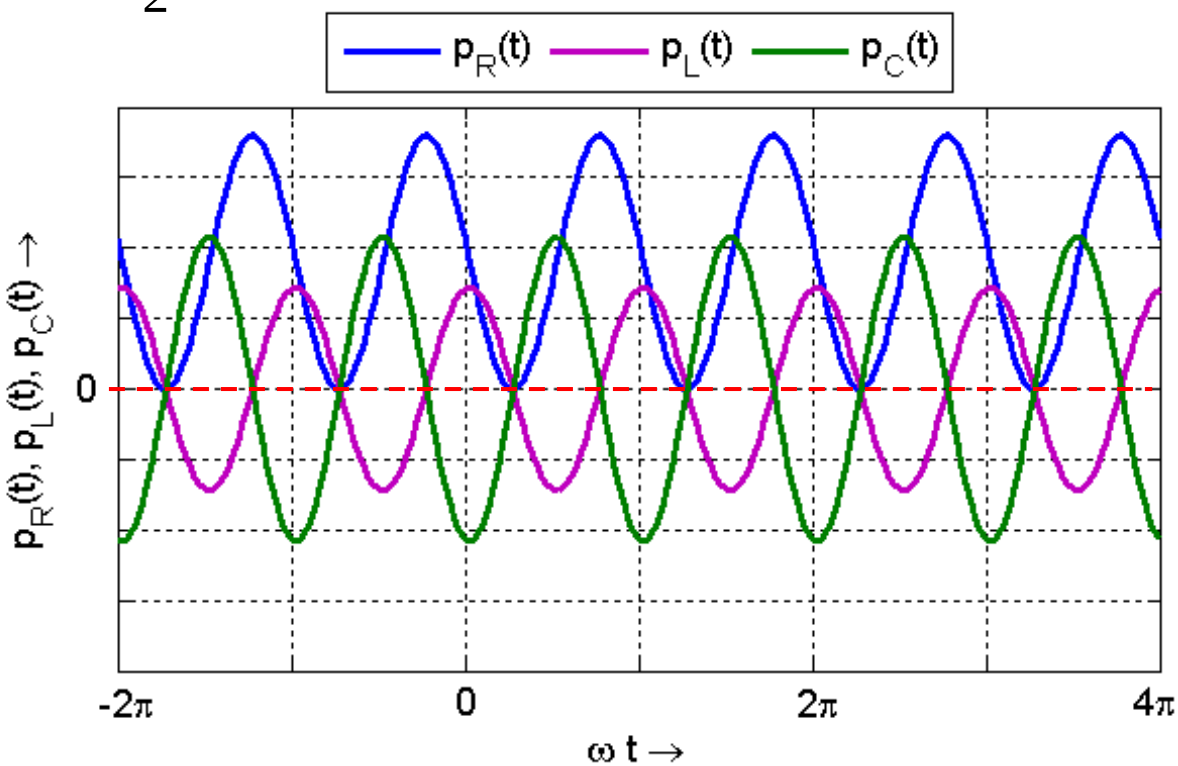

Ch10. III. Root-Mean-Square Voltage and Current Values

Root-Mean Square (RMS) Values

With AC electrical signals, it is often convenient to understand the equivalent DC signal value that provides the same average power.

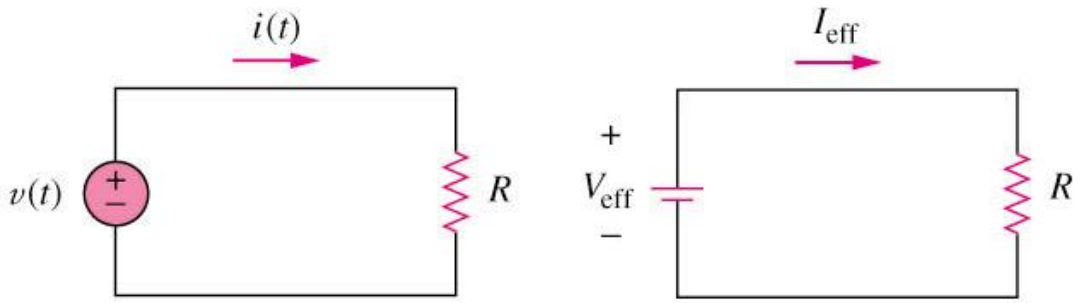

The effective value of a periodic current is the dc current that delivers the same average power to a resistor as the periodic current.

The rms value is a constant itself which depending on the shape of the function i(t).

Ch10. III. Root-Mean-Square Voltage and Current Values

Root-Mean Square (RMS) Values

With AC electrical signals, it is often convenient to understand the equivalent DC signal value that provides the same average power.

Consider a general periodic voltage *v*(t) (with a period T) across a resistor.

$$p_R(t) = \frac{v^2(t)}{R} \quad \text{and} \quad p_{avg} = \frac{1}{T}\int_0^T p_R(t)\,dt$$

$$\Rightarrow p_{avg} = \frac{1}{RT}\int_0^T v^2(t)\,dt \square \frac{V_{rms}^2}{R}$$

This equal sign is by definition.

$$V_{rms} = \sqrt{\frac{1}{T}\int_0^T v^2(t)\,dt}$$

V_{rms} is the equivalent or effective DC signal value.

Ch10. III. Root-Mean-Square Voltage and Current Values

Root-Mean Square (RMS) Values

With AC electrical signals, it is often convenient to understand the equivalent DC signal value that provides the same average power.

Consider a general periodic current *i*(t) (with a period T) into a resistor.

$$p_R(t) = i^2(t)R \quad \text{and} \quad p_{avg} = \frac{1}{T}\int_0^T p_R(t)\,dt$$

$$\Rightarrow p_{avg} = \frac{R}{T}\int_0^T i^2(t)\,dt \square I_{rms}^2 R$$

This equal sign is by definition.

$$I_{rms} = \sqrt{\frac{1}{T}\int_0^T i^2(t)\,dt}$$

I_{rms} is the equivalent or effective DC signal value.

Ch10. III. Root-Mean-Square Voltage and Current Values

Calculating the Root-Mean Square (RMS) Values

Consider a voltage signal that is a triangle wave.

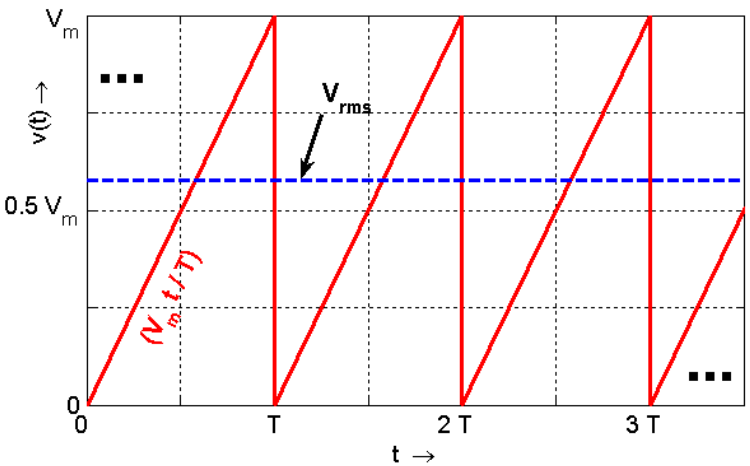

$$\Rightarrow V_{rms} = \sqrt{\frac{1}{T}\int_0^T [V_m t/T]^2\, dt} = \sqrt{\frac{1}{T}\left[\frac{V_m^2 t^3}{3T^2}\right]_{t=0}^{t=T}} = \frac{V_m}{\sqrt{3}}$$

Consider a current signal that is a square wave.

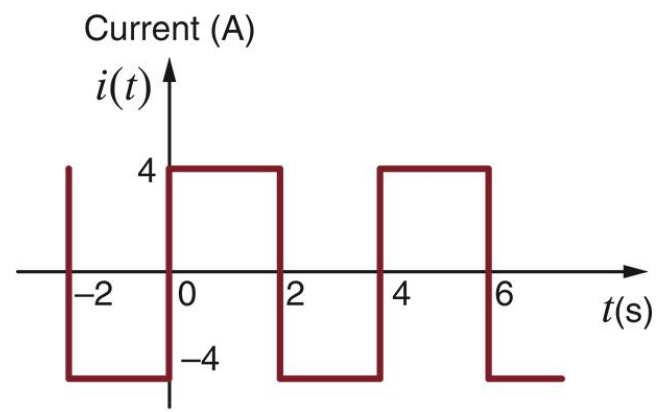

$$i^2(t) = 16;\ 0 \le t < 4$$

$$I_{rms} = 4(A)$$

Ch10. III. Root-Mean-Square Voltage and Current Values

Calculating the Root-Mean Square (RMS) Values

What is the RMS value of a sinusoidal signal ?

$$V_{\text{rms}}^2 = \frac{1}{T}\int_0^T \left[V_{\text{m}}\cos\left(\omega t+\theta\right)\right]^2 dt = \frac{V_{\text{m}}^2}{T}\int_0^T \frac{1}{2}\left[1+\cos\left(2\omega t+2\theta\right)\right]dt = \frac{V_{\text{m}}^2}{2}$$

$$\Rightarrow V_{\text{rms}} = \frac{V_{\text{m}}}{\sqrt{2}}$$

For sinusoids it is common to give rms value (rather than peak value), e.g. 50Hz, 240 V household power supply refers to its rms value (i.e., the power supply's peak value is 240√2 ≈ 339.4 V)

Ch10. IV. Average Power and Apparent Power

For sinusoidal ac signals, the average power can be expressed in terms of the RMS values of the current and voltage.

$$P_{avg} = \frac{1}{2} V_m I_m \cos(\theta_v - \theta_i) = V_{rms} I_{rms} \cos(\theta_v - \theta_i)$$

Ch10. IV. Average Power and Apparent Power

- Apparent Power, S, is the product of the r.m.s. values of voltage and current.
- It is measured in volt-amperes or VA to distinguish it from the average or real power which is measured in watts.

$$\boxed{P = V_{rms}\, I_{rms} \cos(\theta_v - \theta_i) = S \cos(\theta_v - \theta_i)}$$

Apparent Power, S **Power Factor, pf**

- Power factor is the cosine of the phase difference between the voltage and current. It is also the cosine of the angle of the load impedance.

Ch10. IV. Average Power and Apparent Power

$$\boxed{P = V_{rms}\, I_{rms} \cos(\theta_v - \theta_i) = S \cos(\theta_v - \theta_i)}$$

Apparent Power, S **Power Factor, pf**

Often, power factor is given as a percentage and current as leading (i.e. capacitive load) or lagging (i.e. inductive load) the voltage, e.g. a power factor of 90% leading corresponds to $\theta = -\cos^{-1}(0.9) \approx -25.84^{o}$, while a power factor of 90% lagging corresponds to $\theta = \cos^{-1}(0.9) \approx 25.84^{o}$

SINUSOIDAL AC POWER ANALYSIS

Ch10. IV. Average Power and Apparent Power

Purely resistive load (R)	$\theta_v - \theta_i = 0$, Pf = 1	P/S = 1, all power are consumed
Purely reactive load (L or C)	$\theta_v - \theta_i = \pm 90^o$, pf = 0	P = 0, no real power consumption
Resistive and reactive load (R and L/C)	$\theta_v - \theta_i > 0$ $\theta_v - \theta_i < 0$	• Lagging - inductive load • Leading - capacitive load

SINUSOIDAL AC POWER ANALYSIS

Ch10. V. Complex Power

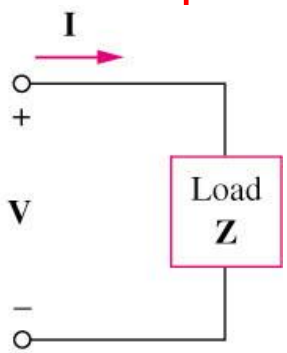

$$S = \frac{1}{2} V I^* = V_{rms} I_{rms} \angle \theta_v - \theta_i$$

$$\Rightarrow S = \underbrace{V_{rms} I_{rms} \cos(\theta_v - \theta_i)}_{P} + j \underbrace{V_{rms} I_{rms} \sin(\theta_v - \theta_i)}_{Q}$$

S = P + j Q

P: is the <u>average power in watts</u> delivered to a load and it is the only useful power.

Q: is the <u>reactive power exchange</u> between the source and the reactive part of the load. It is measured in VAR.

- Q = 0 for *resistive loads* (unity pf).
- Q < 0 for *capacitive loads* (leading pf).
- Q > 0 for *inductive loads* (lagging pf).

Volt Amperes Reactive (VAR)

SINUSOIDAL AC POWER ANALYSIS

Ch10. V. Complex Power

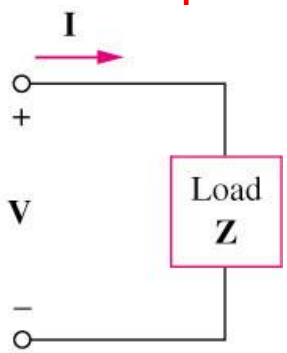

$$\Rightarrow S = \underbrace{V_{rms}\, I_{rms} \cos(\theta_v - \theta_i)}_{P} + j\,\underbrace{V_{rms}\, I_{rms} \sin(\theta_v - \theta_i)}_{Q}$$

S = P + j Q

Apparent Power, S = |**S**| = Vrms*Irms = $\sqrt{P^2 + Q^2}$

Real or Average power, P = Re(**S**) = S cos($\theta_v - \theta_i$)

Reactive Power, Q = Im(**S**) = S sin($\theta_v - \theta_i$)

Power factor, pf = P/S = cos($\theta_v - \theta_i$)

SINUSOIDAL AC POWER ANALYSIS

Ch10. V. Complex Power

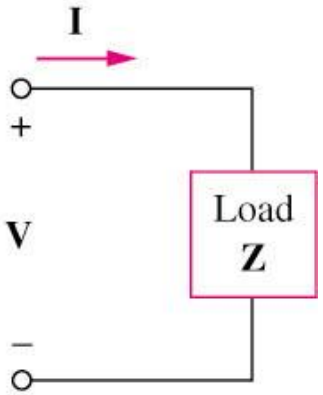

$$\Rightarrow S = \underbrace{V_{rms}\, I_{rms} \cos(\theta_v - \theta_i)}_{P} + j\,\underbrace{V_{rms}\, I_{rms} \sin(\theta_v - \theta_i)}_{Q}$$

S = P + j Q

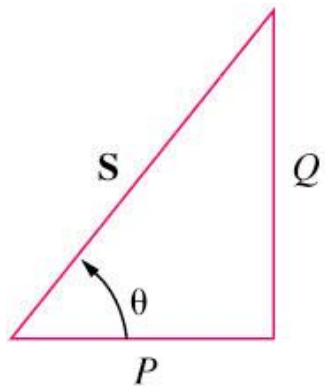

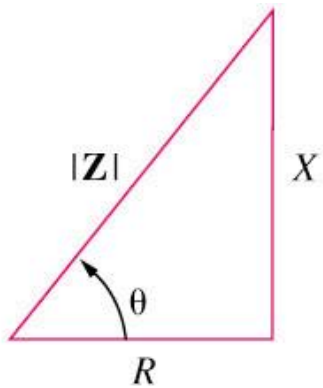

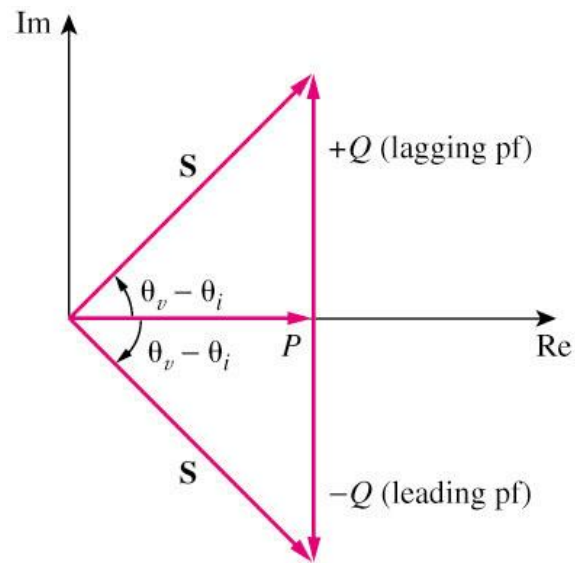

Power Triangle **Impedance Triangle** **Power Factor**

SINUSOIDAL AC POWER ANALYSIS

Ch10. V. Complex Power

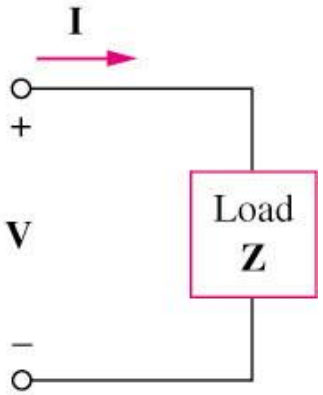

$$\Rightarrow S = \underbrace{V_{rms}\, I_{rms} \cos(\theta_v - \theta_i)}_{P} + j\,\underbrace{V_{rms}\, I_{rms} \sin(\theta_v - \theta_i)}_{Q}$$

S = P + j Q

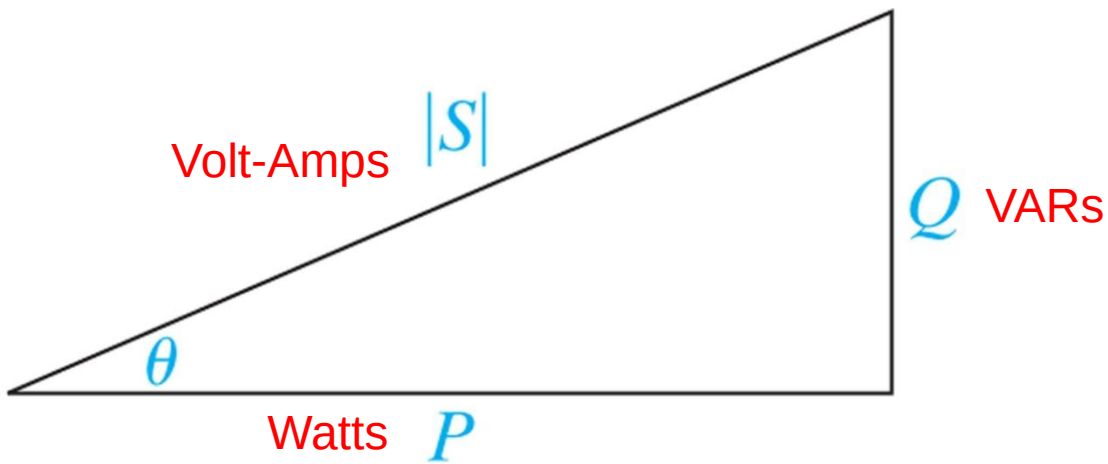

Ch10. V. Complex Power

There is conservation of AC Power

The complex real, and reactive powers of the sources **equal** the respective **sums of** the complex, real, and reactive powers of the individual loads.

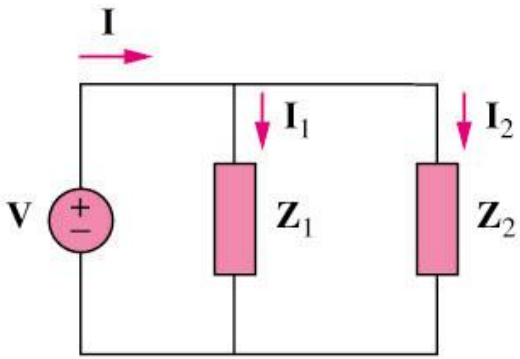

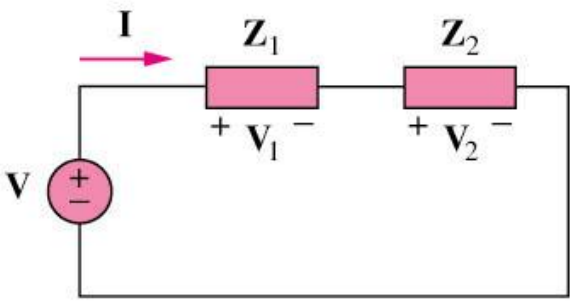

$$S = \frac{1}{2}VI^* = \frac{1}{2}VI_1^* + \frac{1}{2}VI_2^*$$

$$S = \frac{1}{2}VI^* = \frac{1}{2}V_1I^* + \frac{1}{2}V_2I^*$$

SINUSOIDAL AC POWER ANALYSIS

Ch10. V. Complex Power and Reactive Power

$$p(t) = v(t)\, i(t) = V_m I_m \cos(\omega t + \theta_v) \cos(\omega t + \theta_i)$$

$$p(t') = v(t')\, i(t') = V_m I_m \cos(\omega t' + \theta_v - \theta_i) \cos(\omega t')$$ Phase shift power signal

$$p(t') = \frac{1}{2} V_m I_m \cos(\theta_v - \theta_i) + \frac{1}{2} V_m I_m \cos(2\omega t' + \theta_v - \theta_i)$$

$$p(t') = \frac{1}{2} V_m I_m \cos(\theta_v - \theta_i) + \frac{1}{2} V_m I_m \cos(2\omega t') \cos(\theta_v - \theta_i) - \frac{1}{2} V_m I_m \sin(2\omega t') \sin(\theta_v - \theta_i)$$

$$p(t') = \frac{1}{2} V_m I_m \cos(\theta_v - \theta_i)\left[1 + \cos(2\omega t')\right] - \frac{1}{2} V_m I_m \sin(\theta_v - \theta_i) \sin(2\omega t')$$

$$p(t') = \mathbf{P}\left[1 + \cos(2\omega t')\right] - \mathbf{Q} \sin(2\omega t')$$

$$\mathbf{P} = \frac{1}{2} V_m I_m \cos(\theta_v - \theta_i) \qquad \mathbf{Q} = \frac{1}{2} V_m I_m \sin(\theta_v - \theta_i)$$

Ch10. VI. Maximum Average Power Transfer

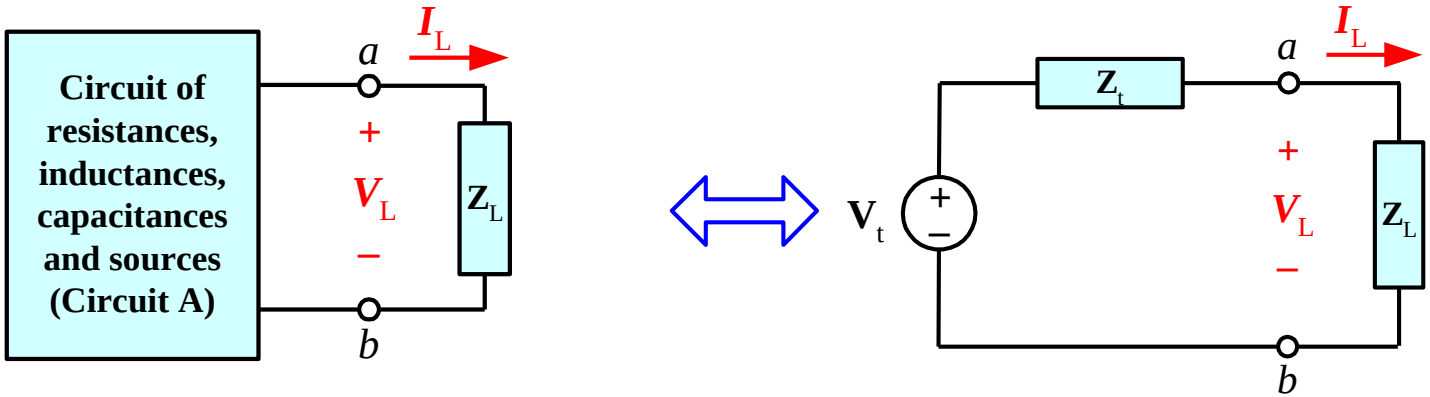

$$V_L = \frac{Z_L}{Z_t + Z_L} V_t$$

$$I_L = \frac{V_t}{Z_t + Z_L}$$

So complex power delivered to the load:

$$S_{load} = \frac{V_L I_L^*}{2} = \frac{1}{2}\left(\frac{Z_L}{Z_t + Z_L}\right) V_t \left(\frac{V_t^*}{Z_t^* + Z_L^*}\right) = \frac{Z_L |V_t|^2}{2|(Z_t + Z_L)|^2}$$

and the average power delivered to the load:

$$P_{load} = \mathrm{Re}(S_{load}) = \frac{\mathrm{Re}(Z_L)|V_t|^2}{2|(Z_t + Z_L)|^2} = \frac{R_L |V_t|^2}{2\,[(R_t + R_L)^2 + (X_t + X_L)^2]}$$

where $Z_t = R_t + jX_t$, $Z_L = R_L + jX_L$

How do we maximize the average power delivered to the load?

Ch10. VI. Maximum Average Power Transfer

How do we maximize the average power delivered to the load?

$$P_{load} = \mathrm{Re}(\boldsymbol{S}_{load}) = \frac{\mathrm{Re}(\boldsymbol{Z}_L)|\boldsymbol{V}_t|^2}{2|(\boldsymbol{Z}_t + \boldsymbol{Z}_L)|^2} = \frac{R_L|\boldsymbol{V}_t|^2}{2\,[(R_t + R_L)^2 + (X_t + X_L)^2]}$$

$$\text{where } \boldsymbol{Z}_t = R_t + jX_t,\ \boldsymbol{Z}_L = R_L + jX_L$$

Choice of X_L is fairly easy as it appears only in the denominator (which for any given R_L is minimized for $X_L = -X_t$). Once we make this choice, then we have the same optimization problem as in the resistive case.

$$\boxed{\text{i.e. } X_L^{opt} = -X_t,\ R_L^{opt} = R_t \Leftrightarrow \boldsymbol{Z}_L^{opt} = \boldsymbol{Z}_t^*}$$

Ch10. VI. Maximum Average Power Transfer

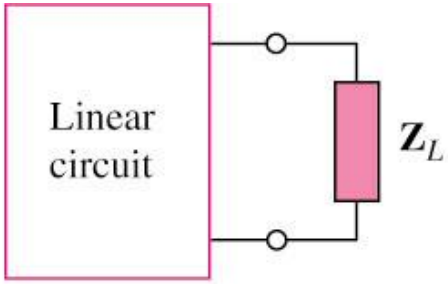

(a)

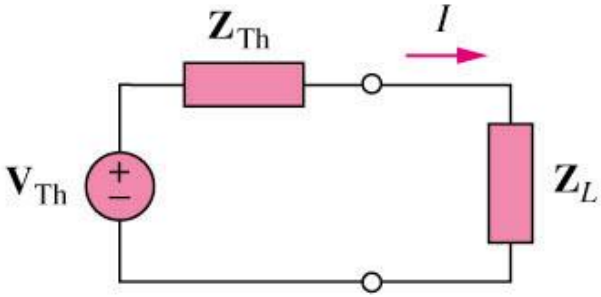

(b)

$$Z_{TH} = R_{TH} + jX_{TH}$$

$$Z_L = R_L + jX_L$$

The maximum average power can be transferred to the load if

$X_L = -X_{TH}$ and $R_L = R_{TH}$

$$P_{max} = \frac{|V_{TH}|^2}{8R_{TH}}$$

If the load is purely real, then $R_L = \sqrt{R_{TH}^2 + X_{TH}^2} = |Z_{TH}|$

Ch10. VI. Maximum Average Power Transfer

For the circuit shown below, find the load impedance Z_L that absorbs the maximum average power. Calculate that maximum average power.

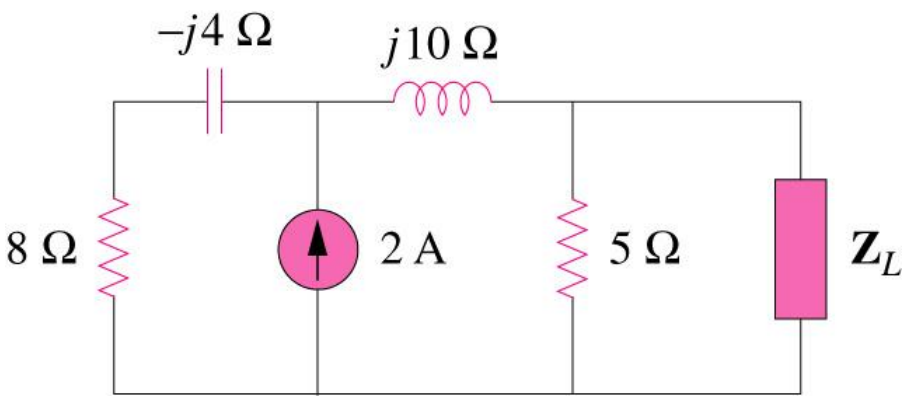

<u>Answer</u>: 3.415 – j0.7317Ω, 1.429W

Ch10. VII. Power Factor Correction

Power factor correction is the process of increasing the power factor without altering the voltage or current to the original load.

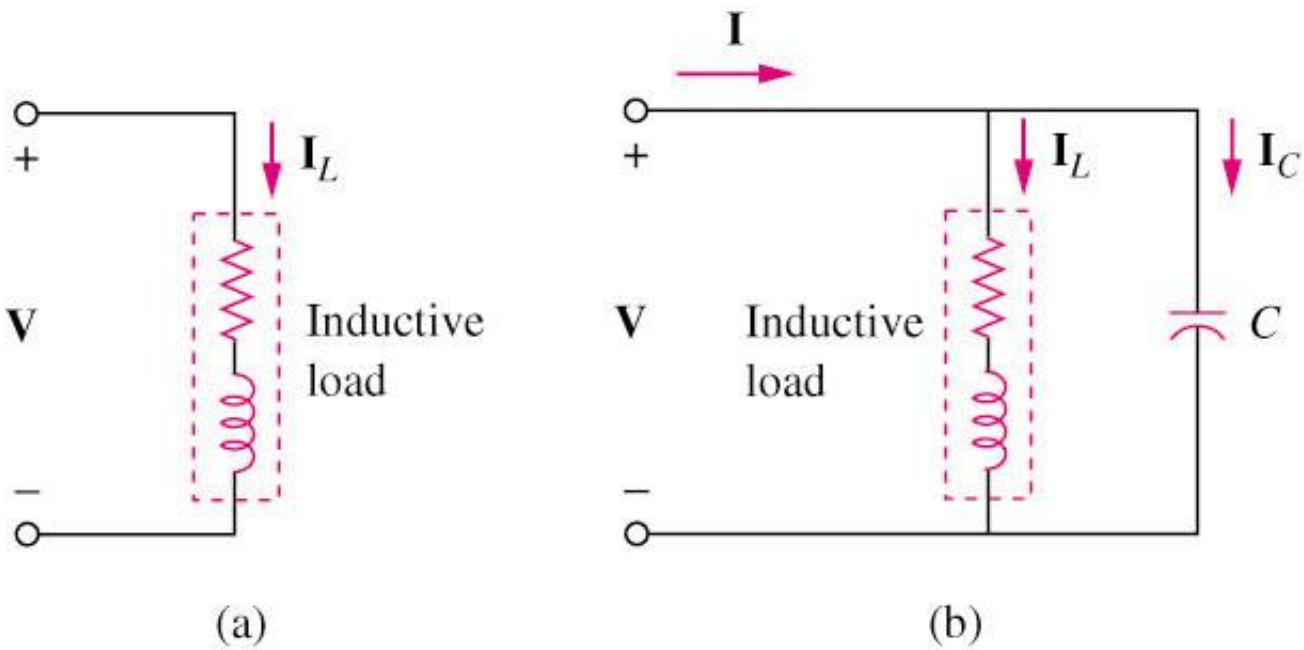

Power factor correction is necessary for economic reasons.

Ch10. VII. Power Factor Correction

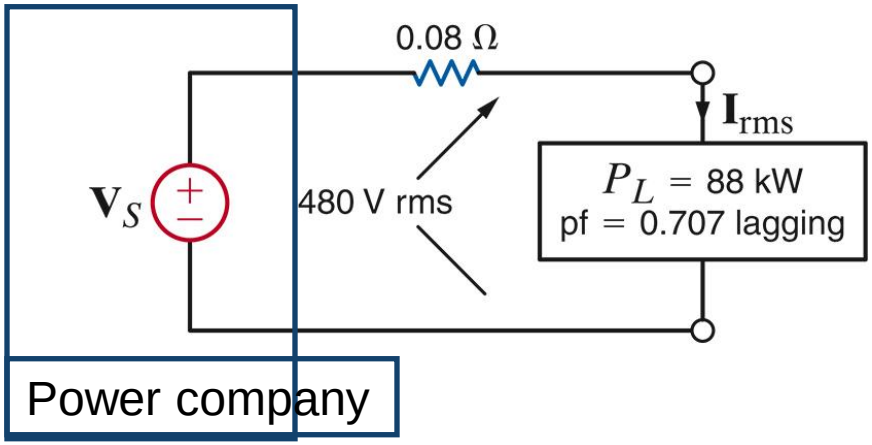

$$\Rightarrow \cos\theta_z = 0.707 \Rightarrow \theta_z = -45°$$

$$I_{rms} = \frac{88\times10^3(W)}{480\times0.707} = 259.3(A)rms$$

$$P_{losses} = I_{rms}^2 R = 259.3^3 \times 0.08 = 5.378kW$$

$$P_S = P_{losses} + 88{,}000(W) = 93.378(kW)$$

If pf=0.9

$$I_{rms} = \frac{88{,}000}{480\times0.9} = 203.7(A)rms$$

$$P_{losses} = I_{rms}^2 R = 3.32kW$$

Losses can be reduced by 2kW!

Ch10. VII. Power Factor Correction

$$P_L = 100kW, V_L = 480(V)rms, pf = 0.707$$
$$R_{line} = 0.1\Omega$$

$$P = V_{rms} \times I_{rms} \times pf$$

$$I_{rms} = \frac{P}{V_{rms} \times pf}$$

$$P_{losses} = I_{rms}^2 R_{line} = \frac{P^2 R_{line}}{V_{rms}^2} \times \frac{1}{pf^2}$$

$$P_{losses}(pf = 0.707) = \frac{10^{10} \times 0.1}{480^2} \times \frac{1}{0.707^2}(W) = 2 \times 4.34kW$$

$$P_{losses}(pf = 0.94) = \frac{10^{10} \times 0.1}{480^2} \times \frac{1}{0.94^2}(W)$$
$$= 1.13 \times 4.34kW$$

$$P_{saved} = 0.87 \times 4.34kW = 3.77kW$$

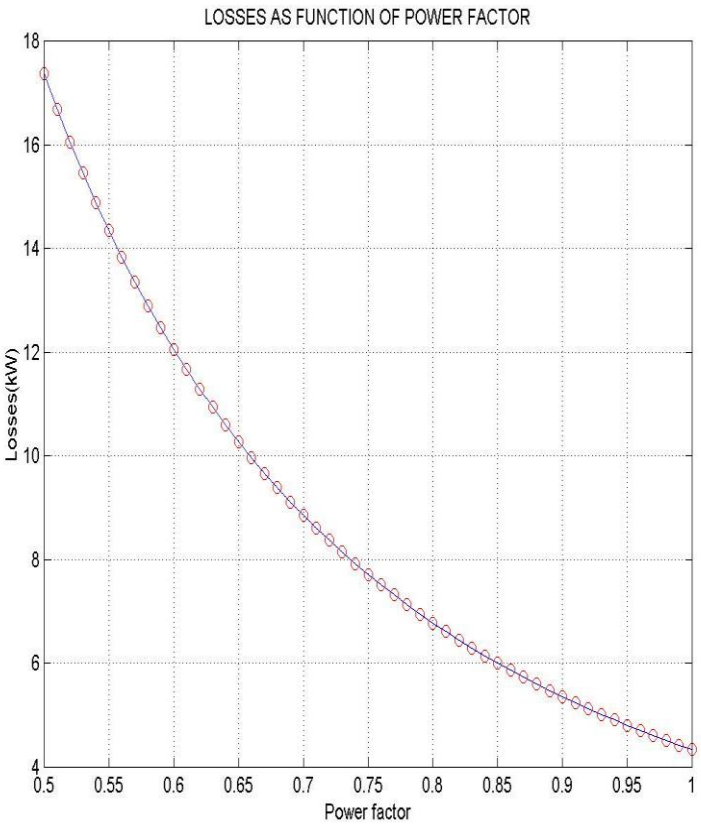

Ch10. VII. Power Factor Correction

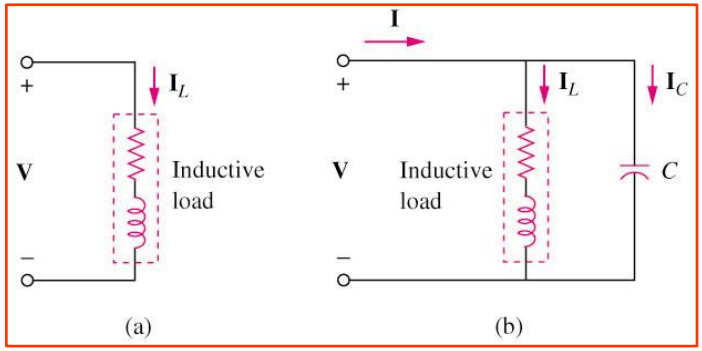

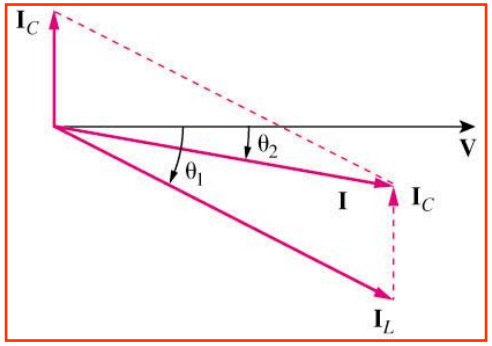

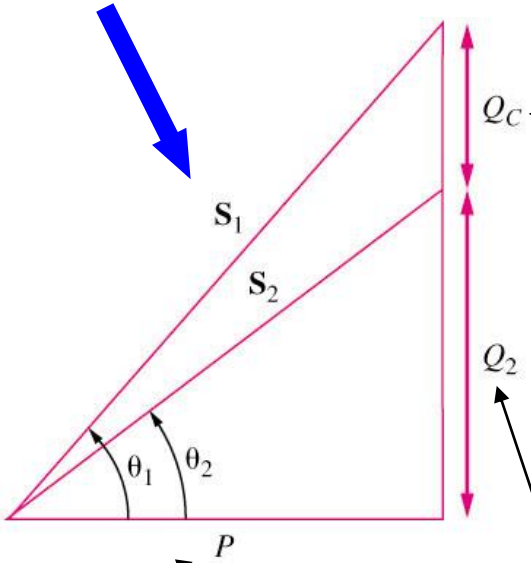

$$Q_c = Q_1 - Q_2$$
$$= P(\tan\theta_1 - \tan\theta_2)$$
$$= \omega C V_{rms}^2$$

$$Q_{capacitor} = |V||I_{capacitor}|$$
$$= |V|^2 \omega C$$

$$Q_1 = S_1 \sin\theta_1$$
$$= P \tan\theta_1$$

$$C = \frac{Q_c}{\omega V_{rms}^2} = \frac{P(\tan\theta_1 - \tan\theta_2)}{\omega V_{rms}^2}$$

$$P = S_1 \cos\theta_1$$

$$Q_2 = P \tan\theta_2$$

Ch10. VII. Power Factor Correction

Large currents can flow in energy storage devices (inductance and capacitance) without average power being delivered.

In heavy industry, many loads are partly inductive (e.g. induction motors), and large amounts of reactive power flow.

This reactive power causes higher currents in the power-distribution system. Consequently, the transmission lines and transformers must have higher ratings than would be necessary to deliver the same average power to a resistive load (which of course has a power factor of 100%).

The industry is charged energy rates that depend on power factor, with higher charges for lower power factors (to cover the increased cost for transmission lines, transformers etc.)

Power factor for inductive loads can be improved by placing capacitors in parallel, as reactive power for capacitor is negative and can (partly) cancel the reactive power requirements of the inductive load.

Active power filter is another technique that uses power electronics to generate just the right current (even for nonlinear loads) so that the line sees effectively a sinusoidal current with a power factor of near 100%.

Ch10. VIII. Transformers

› Transformers

- A device based on magnetic coupling.
- Used in communications devices to match impedances and eliminate DC signals
- Used in power engineering to facilitate the transmission and distribution of electrical power

We will analyze transformers using steady-state sinusoidal analysis.
Transformers are usually classified as somewhere between **linear** and **ideal**.

Ch10. VIII. Transformers

› Linear Transformers

- A four-terminal device comprising two (or more) magnetically coupled coils.

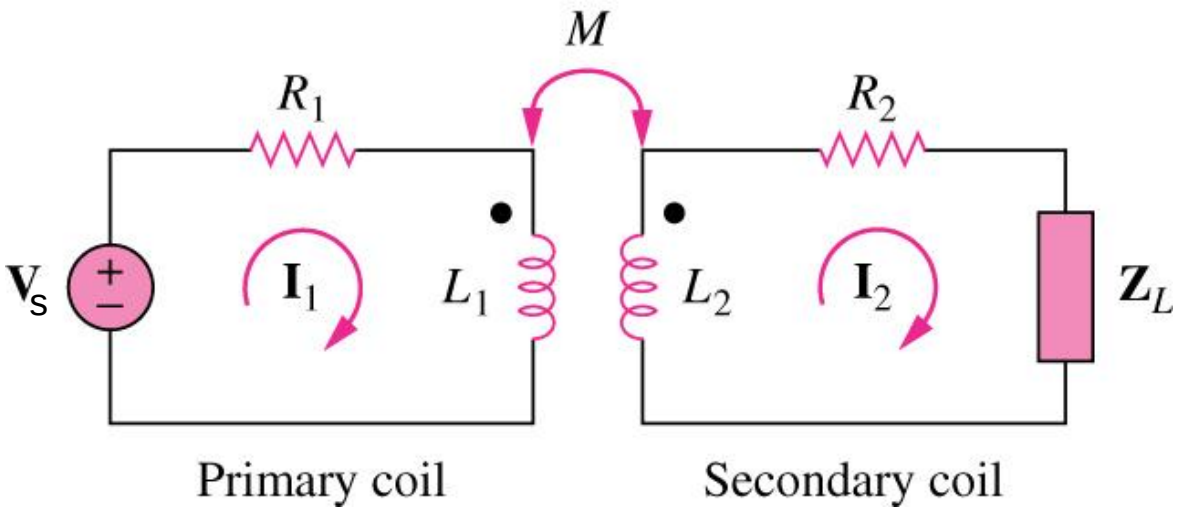

R_1: resistance of primary winding L_1: self-inductance of primary winding

R_2: resistance of secondary winding L_2: self-inductance of secondary winding

M: mutual inductance

Ch10. VIII. Transformers

› Linear Transformers

Find I_1 and I_2

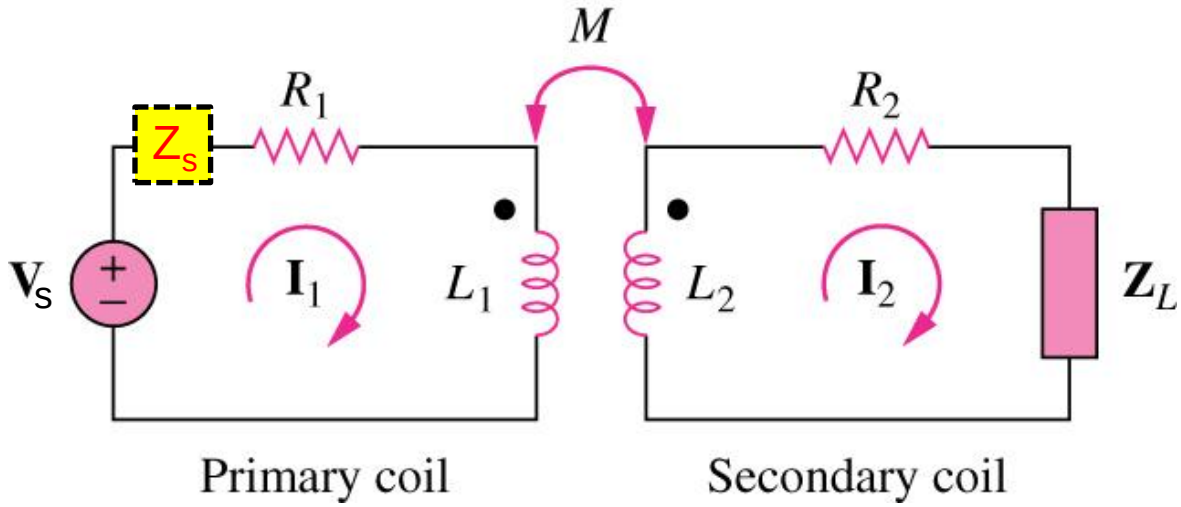

Mesh Equations

$$\mathbf{V}_s = (Z_s + R_1 + j\omega L_1)\mathbf{I}_1 - j\omega M\mathbf{I}_2 \qquad 0 = -j\omega M\mathbf{I}_1 + (R_2 + j\omega L_2 + Z_L)\mathbf{I}_2$$

Ch10. VIII. Transformers

› Linear Transformers

Find I_1 and I_2

Mesh Equations

$$\mathbf{V}_s = (Z_s + R_1 + j\omega L_1)\mathbf{I}_1 - j\omega M\mathbf{I}_2$$

$$0 = -j\omega M\mathbf{I}_1 + (R_2 + j\omega L_2 + Z_L)\mathbf{I}_2$$

Let

$$Z_{11} = Z_s + R_1 + j\omega L_1$$

$$Z_{22} = R_2 + j\omega L_2 + Z_L$$

Then

$$\mathbf{I}_1 = \frac{Z_{22}}{Z_{11}Z_{22} + \omega^2 M^2}\mathbf{V}_s$$

$$\mathbf{I}_2 = \frac{j\omega M}{Z_{11}Z_{22} + \omega^2 M^2}\mathbf{V}_s = \frac{j\omega M}{Z_{22}}\mathbf{I}_1$$

Ch10. VIII. Transformers

› Linear Transformers

What is the impedance seen by the source ?

What is Z_{ab}?

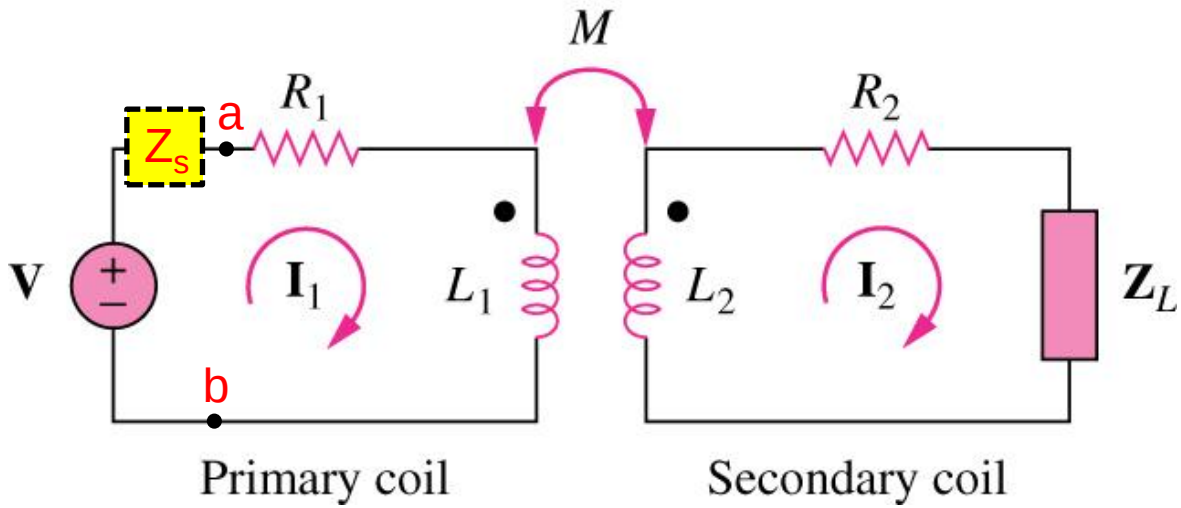

Ch10. VIII. Transformers

› Linear Transformers

What is Z_{ab}?

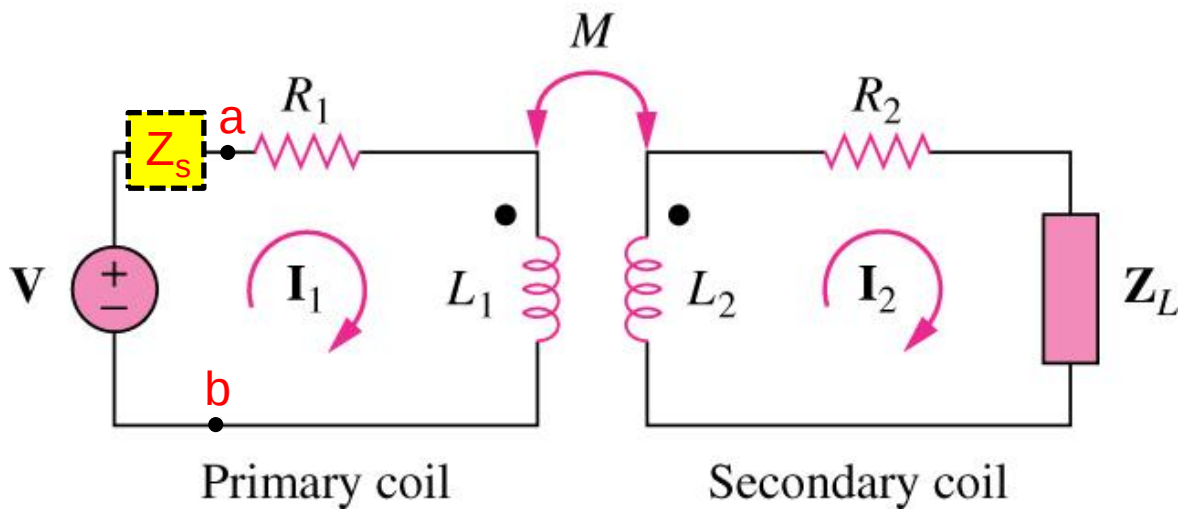

$$Z_{ab} = \frac{\mathbf{V}_s}{\mathbf{I}_1} - Z_s = R_1 + j\omega L_1 + \frac{\omega^2 M^2}{R_2 + j\omega L_2 + Z_L}$$

Reflected Impedance

Ch10. VIII. Transformers

› Linear Transformers

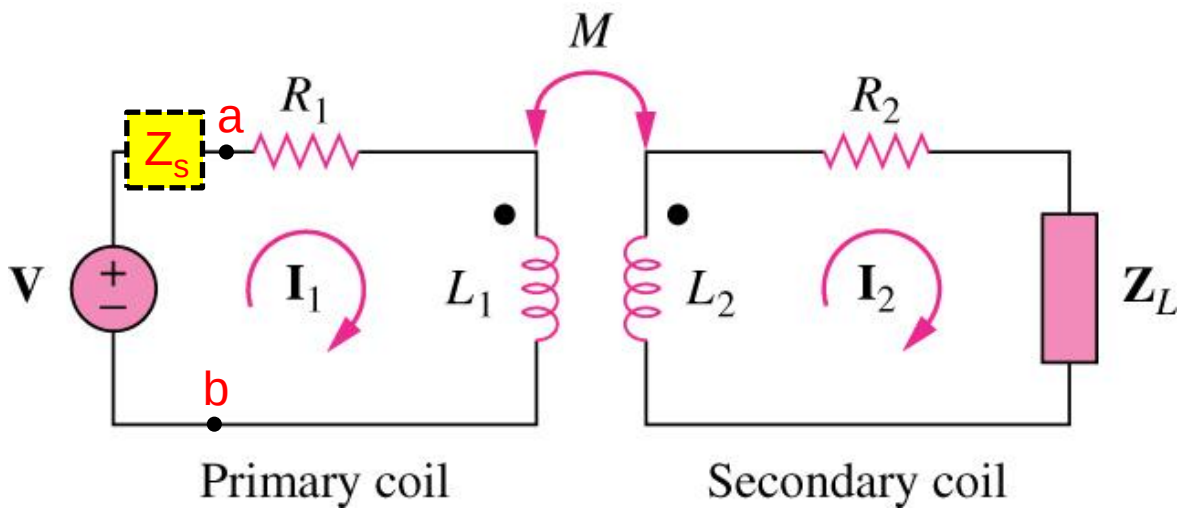

$$Z_{in} = \frac{V}{I_1} = R_1 + j\omega L_1 + Z_R \,,\; Z_R = \frac{\omega^2 M^2}{R_2 + j\omega L_2 + Z_L} \text{ is } \textit{reflected impedance}$$

Ch10. VIII. Transformers

› Linear Transformers: An example problem.

In the circuit below, calculate the input impedance and current I_1. Take Z_1=60-*j*100Ω, Z_2=30+*j*40Ω, and Z_L=80+j60Ω.

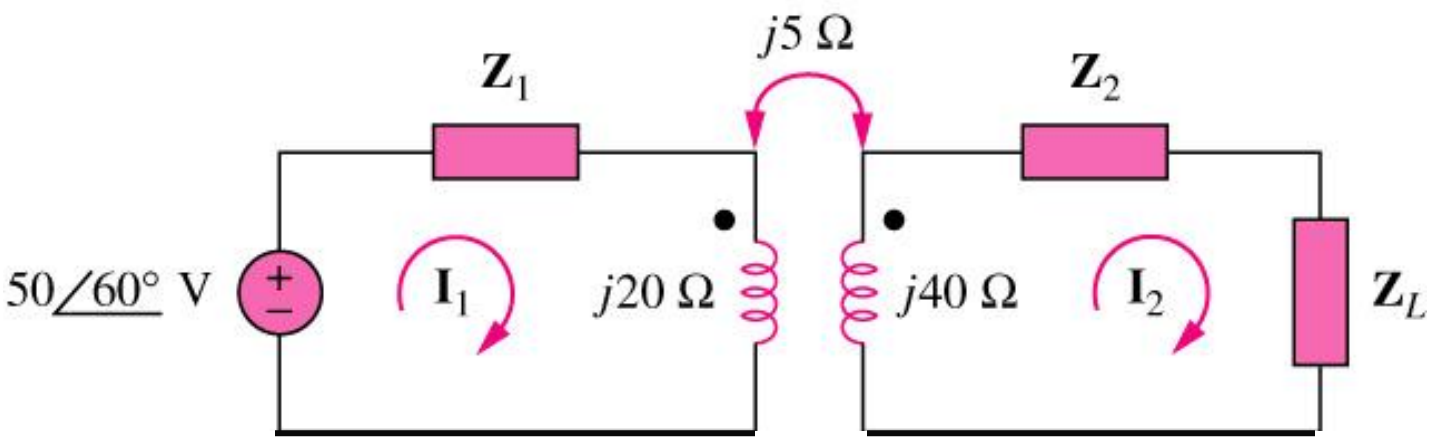

Ans: $Z_{in} = 100.14\angle -53.1°\Omega;\ \ I_1 = 0.5\angle 113.1°\text{A}$

Ch10. VIII. Transformers

› Ideal Transformers

- The coefficient of coupling between coils is unity (k=1). Recall $M = k\sqrt{L_1 L_2}$
- The self-inductance of each coil is infinite ($L_1 = L_2 = \infty$)
- The coil losses due to parasitic resistance are negligible

Ideal transformers are wound on ferromagnetic cores and so the coefficient of coupling can approach unity. Ideal transformers are nonlinear devices. Nonetheless we can obtain useful information using an ideal model that ignores the nonlinearities.

Ch10. VIII. Transformers

› Ideal Transformers

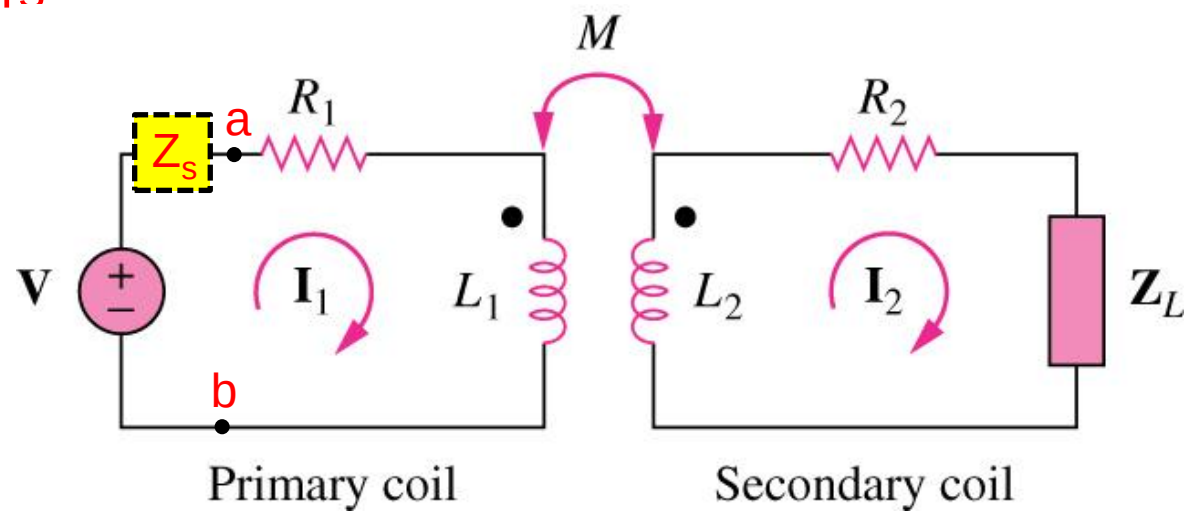

How can we calculate anything when $L_1 = L_2 = \infty$?

Ch10. VIII. Transformers

Recall the Flux linkage equations:

$$\lambda_1 = N_1^2 \mathcal{P}_1 i_1 \qquad \lambda_2 = N_2^2 \mathcal{P}_2 i_2 \qquad \lambda_{21} = N_2 N_1 \mathcal{P}_{21} i_1 \qquad \lambda_{12} = N_1 N_2 \mathcal{P}_{12} i_2$$

$$L_1 = N_1^2 \mathcal{P}_1 \qquad L_2 = N_2^2 \mathcal{P}_2 \qquad M_{21} = N_2 N_1 \mathcal{P}_{21} \qquad M_{12} = N_1 N_2 \mathcal{P}_{12}$$

In magnetic materials the permeance, $\mathcal{P}$, varies nonlinearly with the current.

In non-magnetic materials the permeance, $\mathcal{P}$, is independent of the current.

For non-magnetic materials:

$$\mathcal{P}_{21} = \mathcal{P}_{12}$$

$$M_{21} = M_{12} = M$$

$$\Rightarrow$$

$$M = k\sqrt{L_1 L_2}\ , \quad 0 \le k \le 1$$

$$\frac{1}{k^2} = \left(1 + \frac{\mathcal{P}_{11}}{\mathcal{P}_{12}}\right)\left(1 + \frac{\mathcal{P}_{22}}{\mathcal{P}_{12}}\right)$$

Ch10. VIII. Transformers

› Ideal Transformers

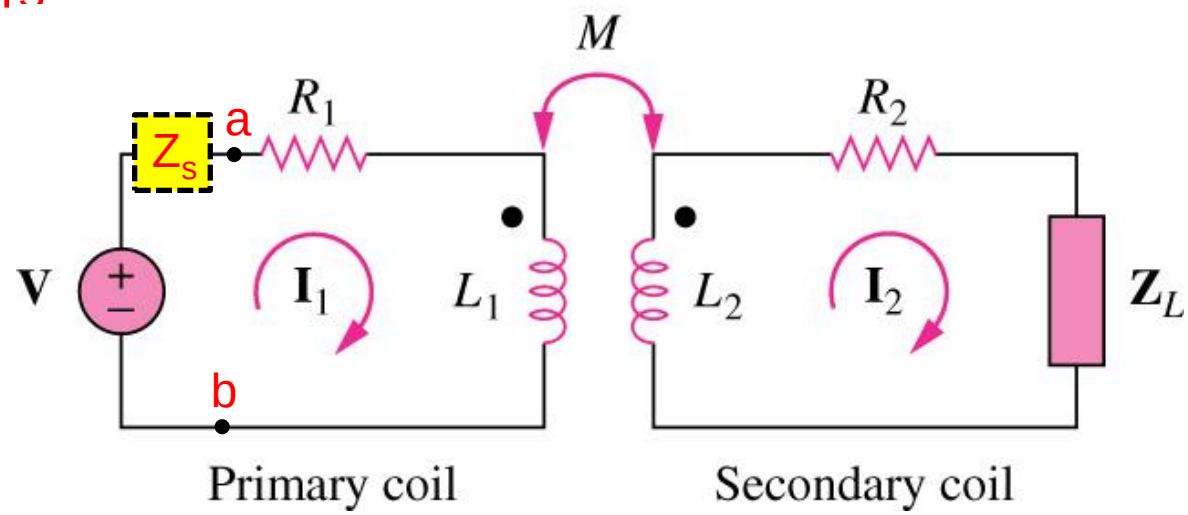

How can we calculate anything when $L_1 = L_2 = \infty$?

$$\frac{L_1}{L_2} = \frac{N_1^2 \mathcal{P}_1}{N_2^2 \mathcal{P}_2} \qquad k = 1 \Rightarrow \mathcal{P}_1 = \mathcal{P}_2 \qquad \frac{L_1}{L_2} = \frac{N_1^2}{N_2^2}$$

Ch10. VIII. Transformers

› Ideal Transformers

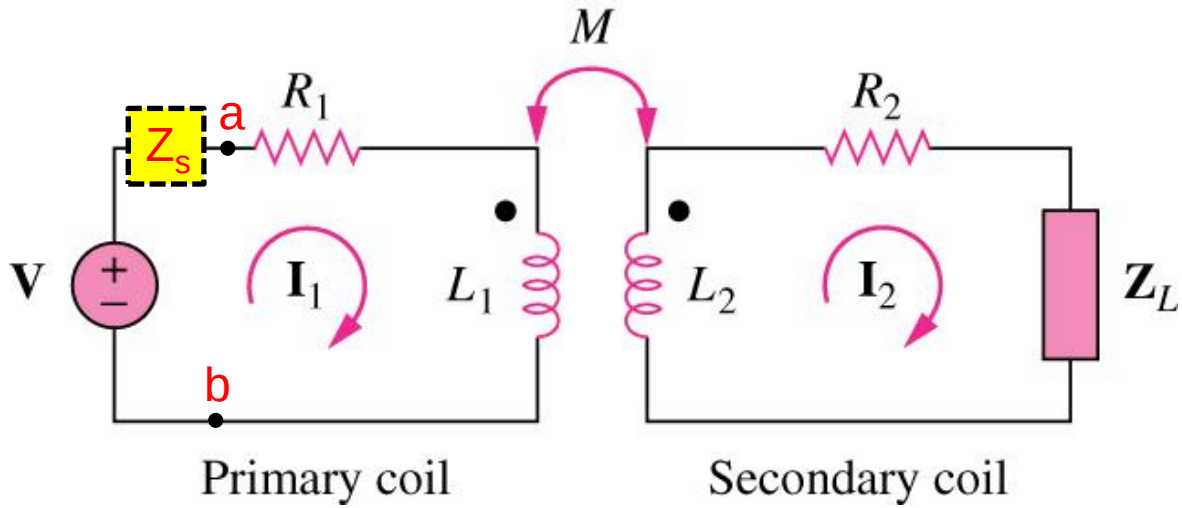

Letting $L_1 = L_2 = \infty$ and using $M^2 = L_1 L_2$ and $\dfrac{L_1}{L_2} = \dfrac{N_1^2}{N_2^2}$

$$\mathrm{Z}_{\text{in}} = \frac{\mathrm{V}}{\mathrm{I}_1} = R_1 + j\omega L_1 + \mathrm{Z}_R \ , \ \mathrm{Z}_R = \frac{\omega^2 M^2}{R_2 + j\omega L_2 + \mathrm{Z}_L}$$

$$\mathrm{Z}_{\text{in}} = R_1 + \left(\frac{N_1}{N_2}\right)^2 R_2 + \left(\frac{N_1}{N_2}\right)^2 Z_L$$

Ch10. VIII. Transformers

› Ideal Transformers

$$Z_{in} = \frac{V}{I_1} = R_1 + j\omega L_1 + Z_R \ , \ Z_R = \frac{\omega^2 M^2}{R_2 + j\omega L_2 + Z_L}$$

$$Z_{in} = R_1 + \frac{j\omega L_1 \left(R_2 + j\omega L_2 + Z_L\right)}{R_2 + j\omega L_2 + Z_L} + \frac{\omega^2 M^2}{R_2 + j\omega L_2 + Z_L}$$

$$Z_{in} = R_1 + \frac{j\omega L_1 \left(R_2 + Z_L\right)}{R_2 + j\omega L_2 + Z_L} = R_1 + \frac{j\omega L_1}{j\omega L_2} \frac{R_2 + Z_L}{1 + \frac{R_2 + Z_L}{j\omega L_2}}$$

0

$$Z_{in} = R_1 + \left(\frac{N_1}{N_2}\right)^2 \left(R_2 + Z_L\right)$$

$$Z_{in} = R_1 + \left(\frac{N_1}{N_2}\right)^2 R_2 + \left(\frac{N_1}{N_2}\right)^2 Z_L$$

Ch10. VIII. Transformers

› Ideal Transformers

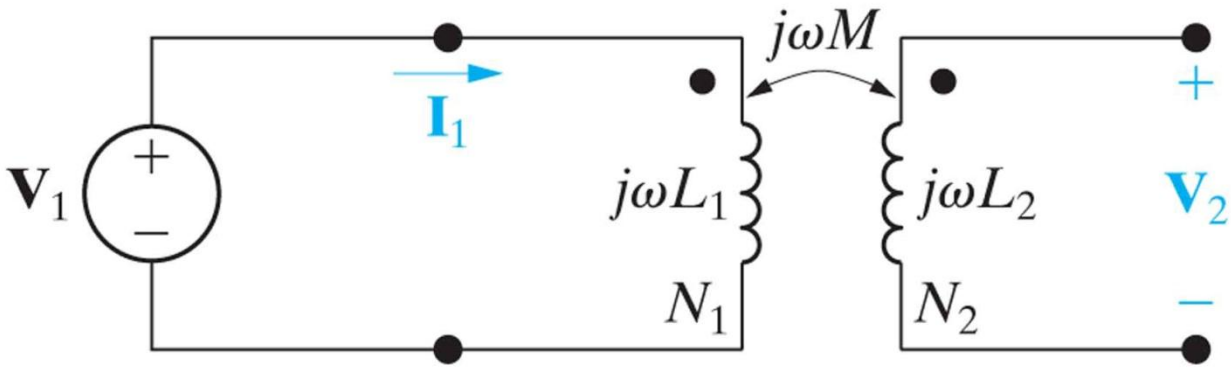

$$\mathbf{V}_2 = j\omega M \mathbf{I}_1$$

$$\mathbf{I}_1 = \frac{\mathbf{V}_1}{j\omega L_1}$$

$$\mathbf{V}_2 = \frac{M}{L_1}\mathbf{V}_1 = \sqrt{\frac{L_2}{L_1}}\mathbf{V}_1 = \frac{N_2}{N_1}\mathbf{V}_1$$

Ch10. VIII. Transformers

› Ideal Transformers

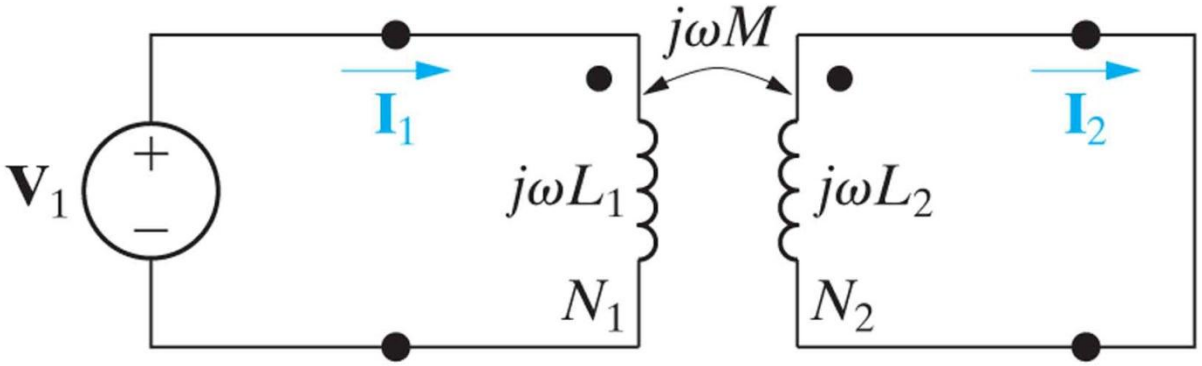

$$0 = -j\omega M\mathbf{I}_1 + j\omega L_2\mathbf{I}_2$$

$$\frac{\mathbf{I}_1}{\mathbf{I}_2} = \frac{L_2}{M} = \sqrt{\frac{L_2}{L_1}} = \frac{N_2}{N_1}$$

Ch10. VIII. Transformers

› An ideal transformer is a unity-coupled, lossless transformer in which the primary and secondary coils have infinite self-inductances.

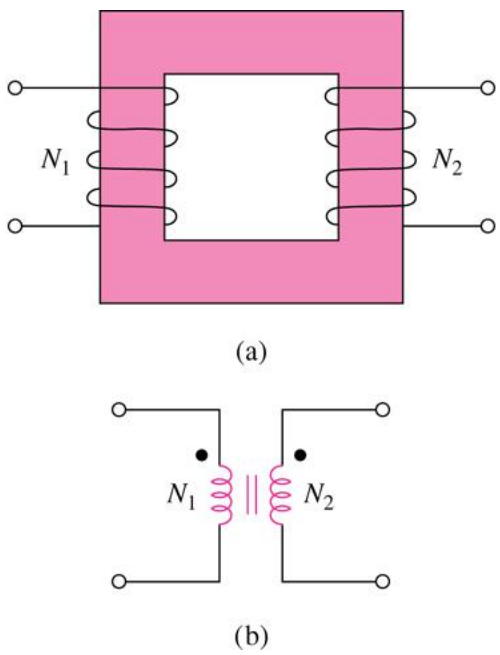

(a) Ideal Transformer

(b) Circuit symbol

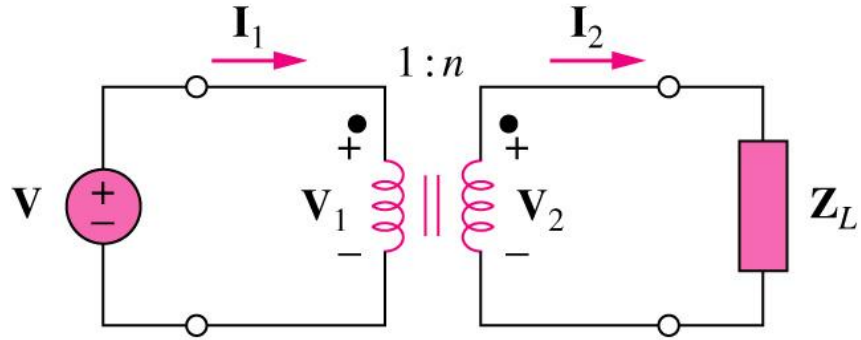

$$\frac{V_2}{V_1} = \frac{N_2}{N_1} = n \qquad \frac{I_2}{I_1} = \frac{N_1}{N_2} = \frac{1}{n}$$

V2>V1→ step-up transformer

V2<V1→ step-down transformer

Ch10. VIII. Transformers

Example Problem:

An ideal transformer is rated at 2400/120V, 9.6 kVA, and has 50 turns on the secondary side.

Calculate:

(a) the turns ratio,

(b) the number of turns on the primary side, and

(c) the current ratings for the primary and secondary windings.

Ans:

(a) This is a step-down transformer, n=0.05

(b) N1 = 1000 turns

(c) I1 = 4A and I2 = 80A

Ch10. IX. Transformer Applications

› Transformer as an Isolation Device to isolate ac supply from a rectifier

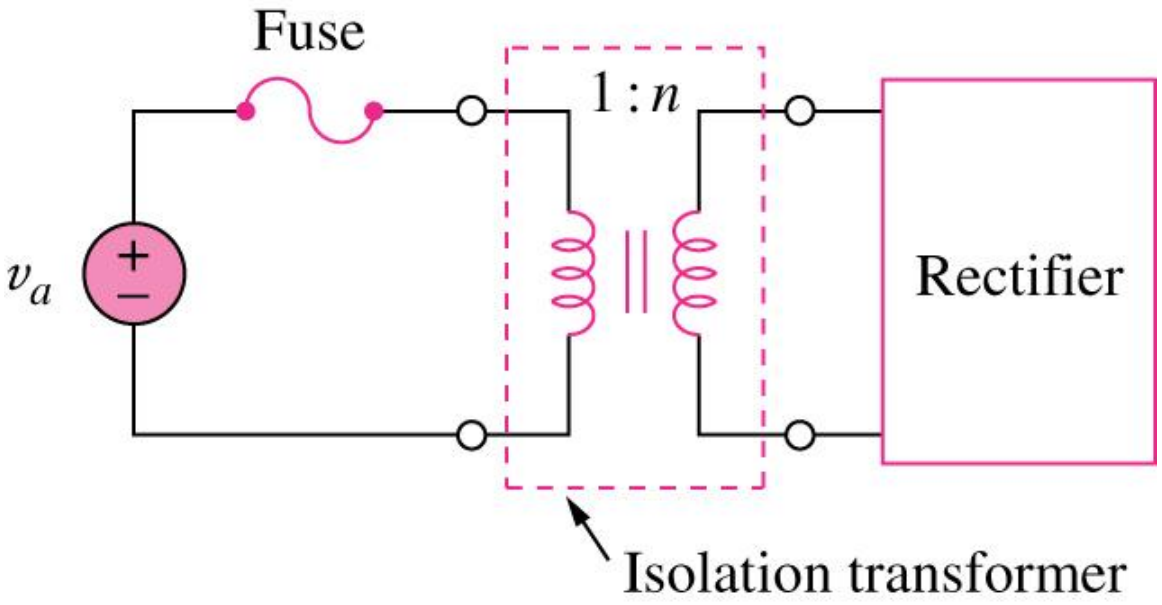

Ch10. IX. Transformer Applications

› Transformer as an Isolation Device to isolate dc between two amplifier stages.

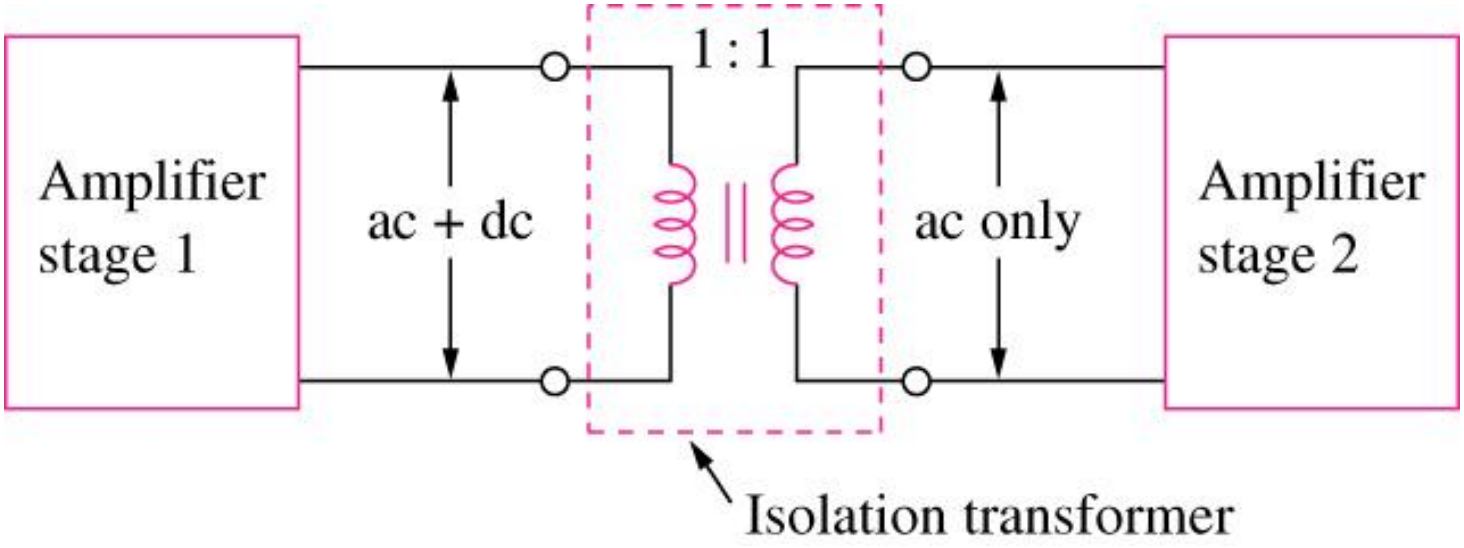

Ch10. IX. Transformer Applications

› Transformer as a Matching Device

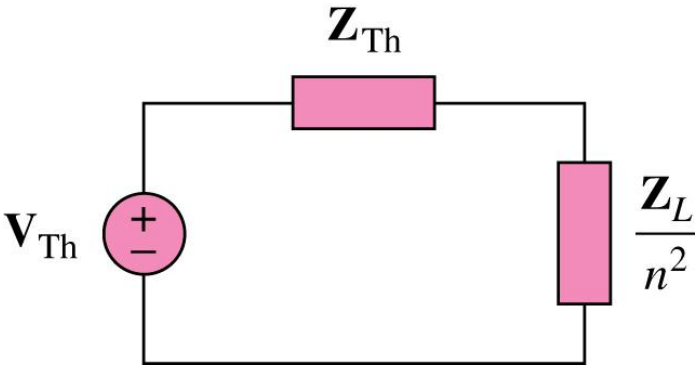

Equivalent circuit

Using an ideal transformer to match the speaker to the amplifier

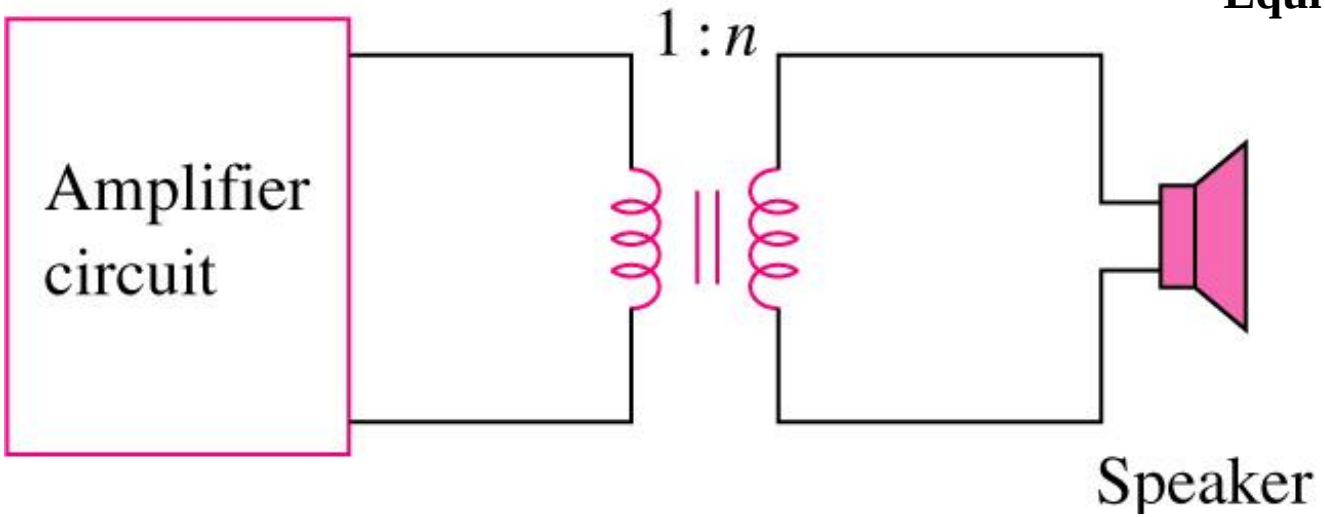

Ch10. IX. Transformer Applications

Example Problem:

Calculate the turns ratio of an ideal transformer required to match a 100Ω load to a source with internal impedance of 2.5kΩ.

Ans: n = 0.2;

Ch1. III. Basic Physics

- Where do we get electrons from?
- 1. http://www.youtube.com/watch?v=ATFqX2Cl3-w
- http://www.youtube.com/watch?v=DjYePMNOQXw
- http://www.youtube.com/watch?v=0huObSCPK14
- http://www.youtube.com/watch?v=NqdOyxJZj0U
- http://www.youtube.com/watch?v=WXPvysew69Y
- http://www.youtube.com/watch?v=RAc1RYilugI
- http://www.badbreakingnews.com/scientist-from-australia-built-a-homemade-marnetic-generator-that-produces-25-kw-of-free-electricity-for-his-home/