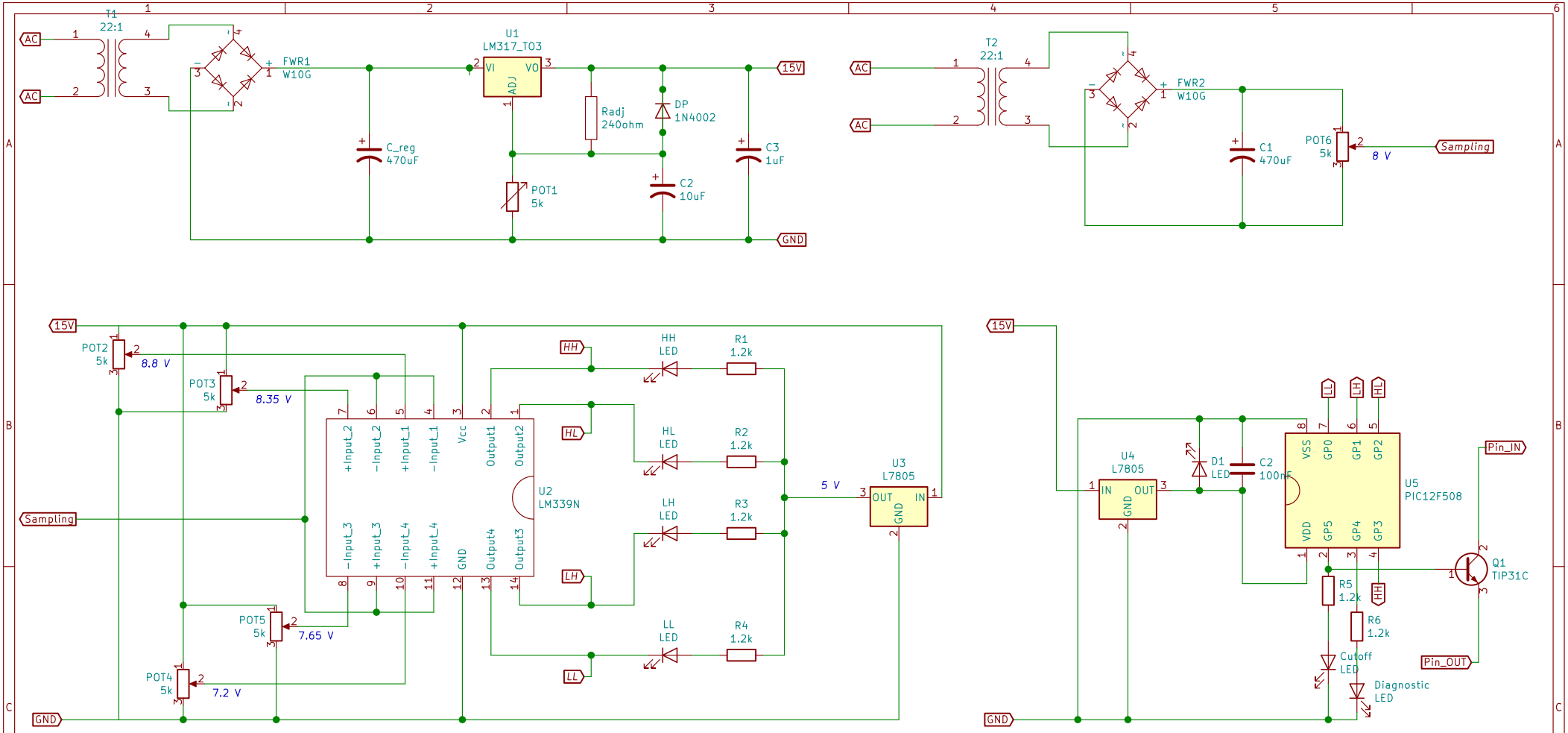

Sheet: /
File: Vprotection.sch

Title:

Size: A4	Date:	Rev:
KiCad E.D.A. kicad (5.0.0)		Id: 1/1