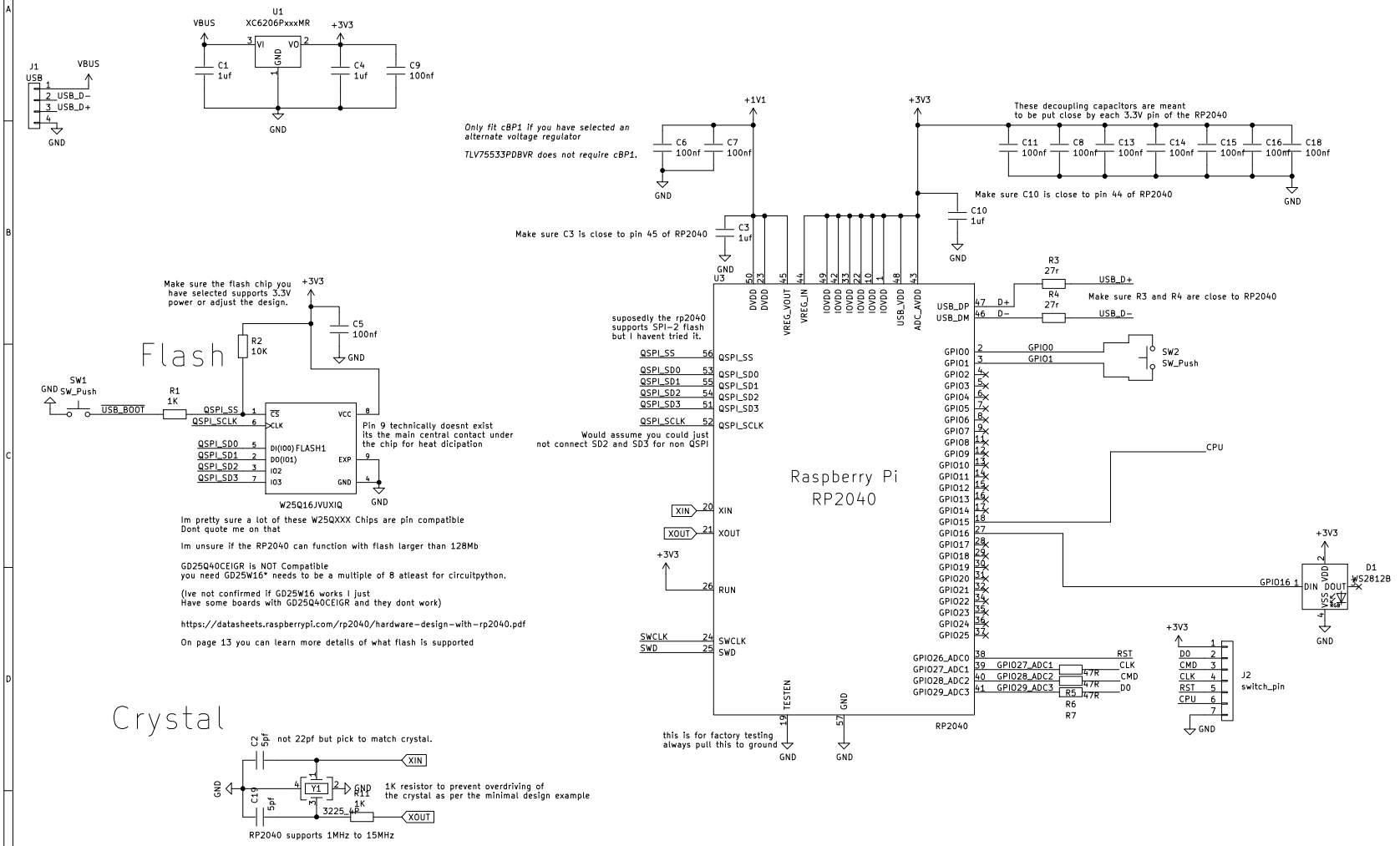

Envious.Design

Sheet: /

File: picofly.kicad_sch

Title: Raspberry Pi Pico Clone

Size: A3	Date: 2020-12-18	Rev: REV1
KiCad E.D.A. kicad (6.0.7)		Id: 1/1