When in doubt, ensure build is completed symmetrically, and ensure direction of differential is correct.

1

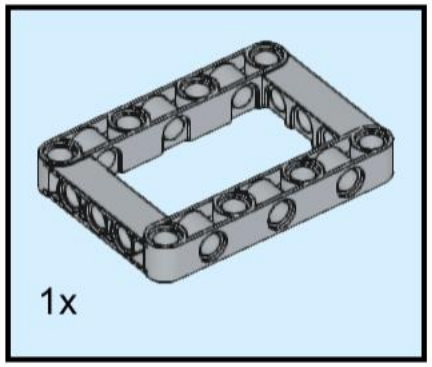

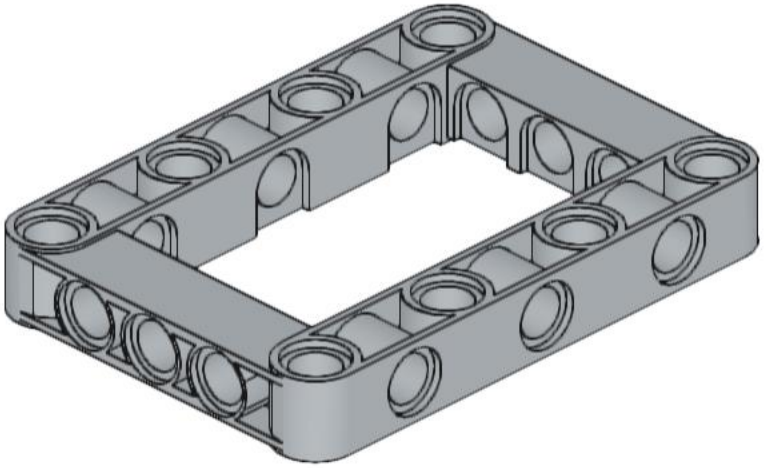

2

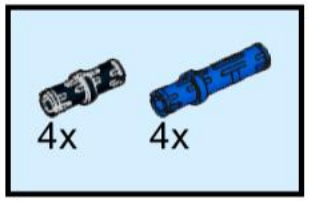

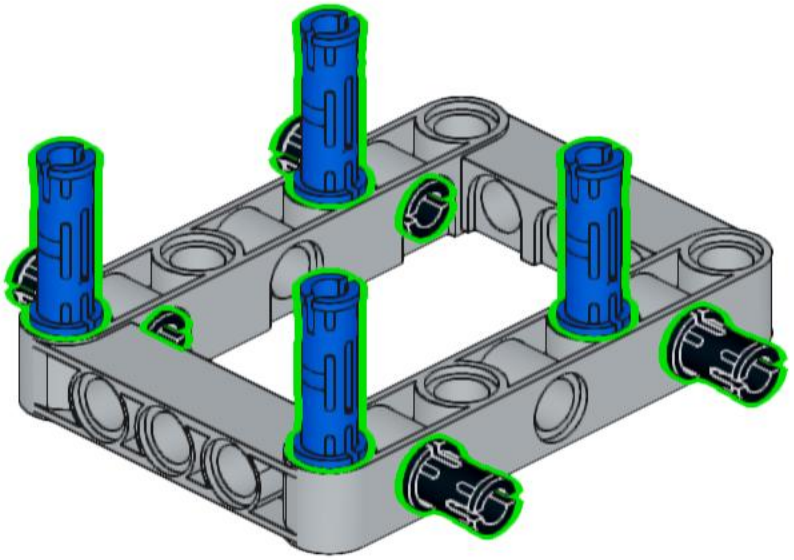

3

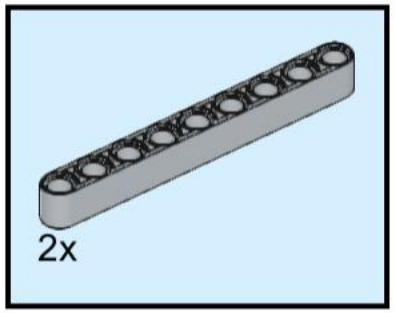

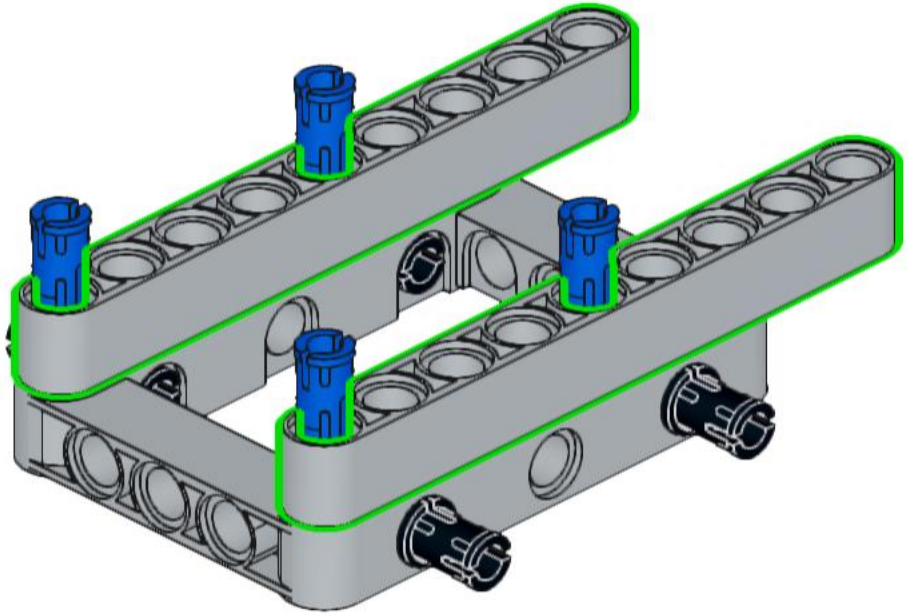

4

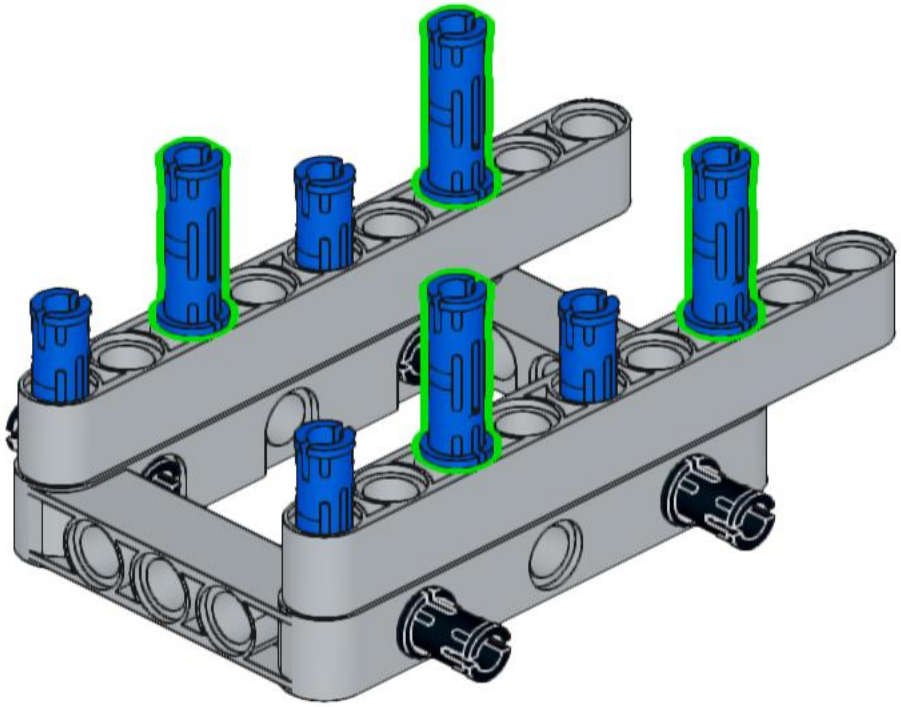

5

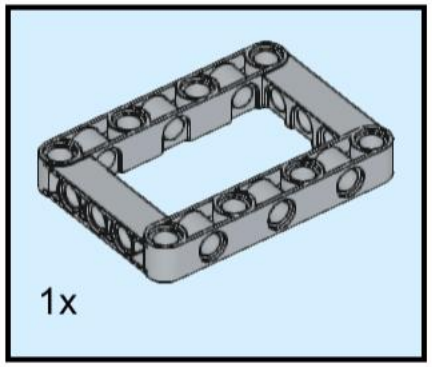

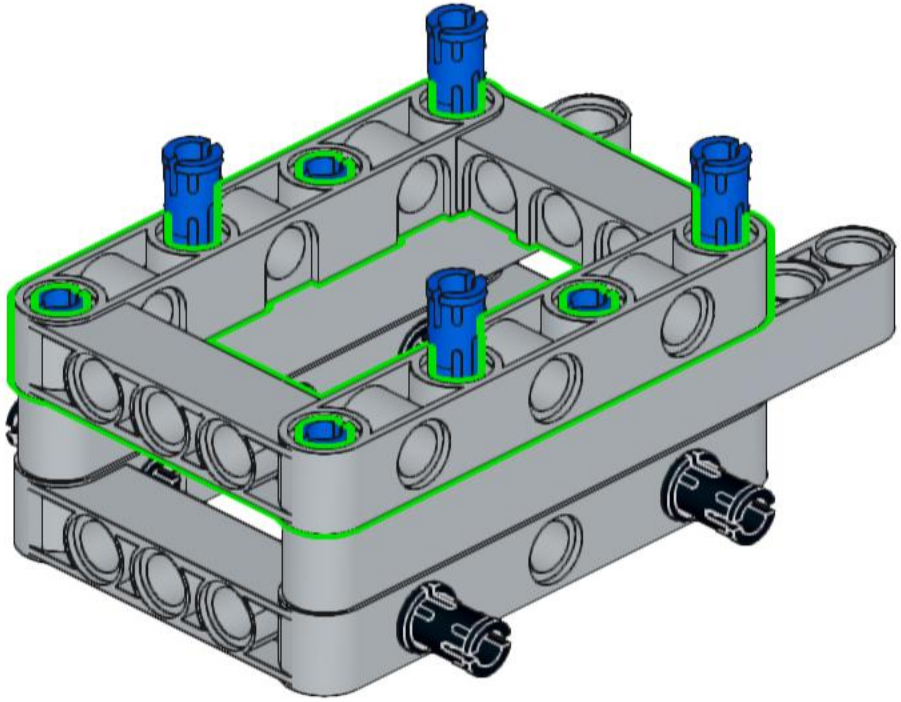

6

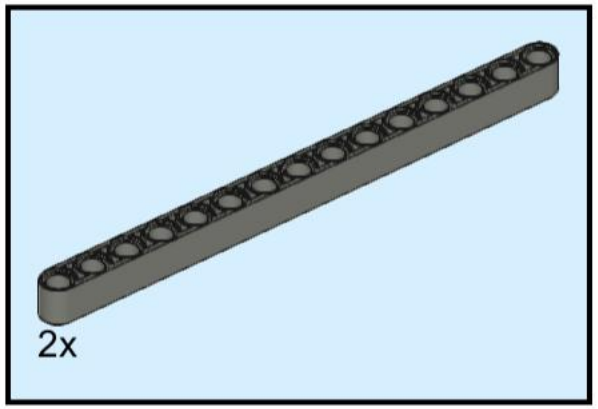

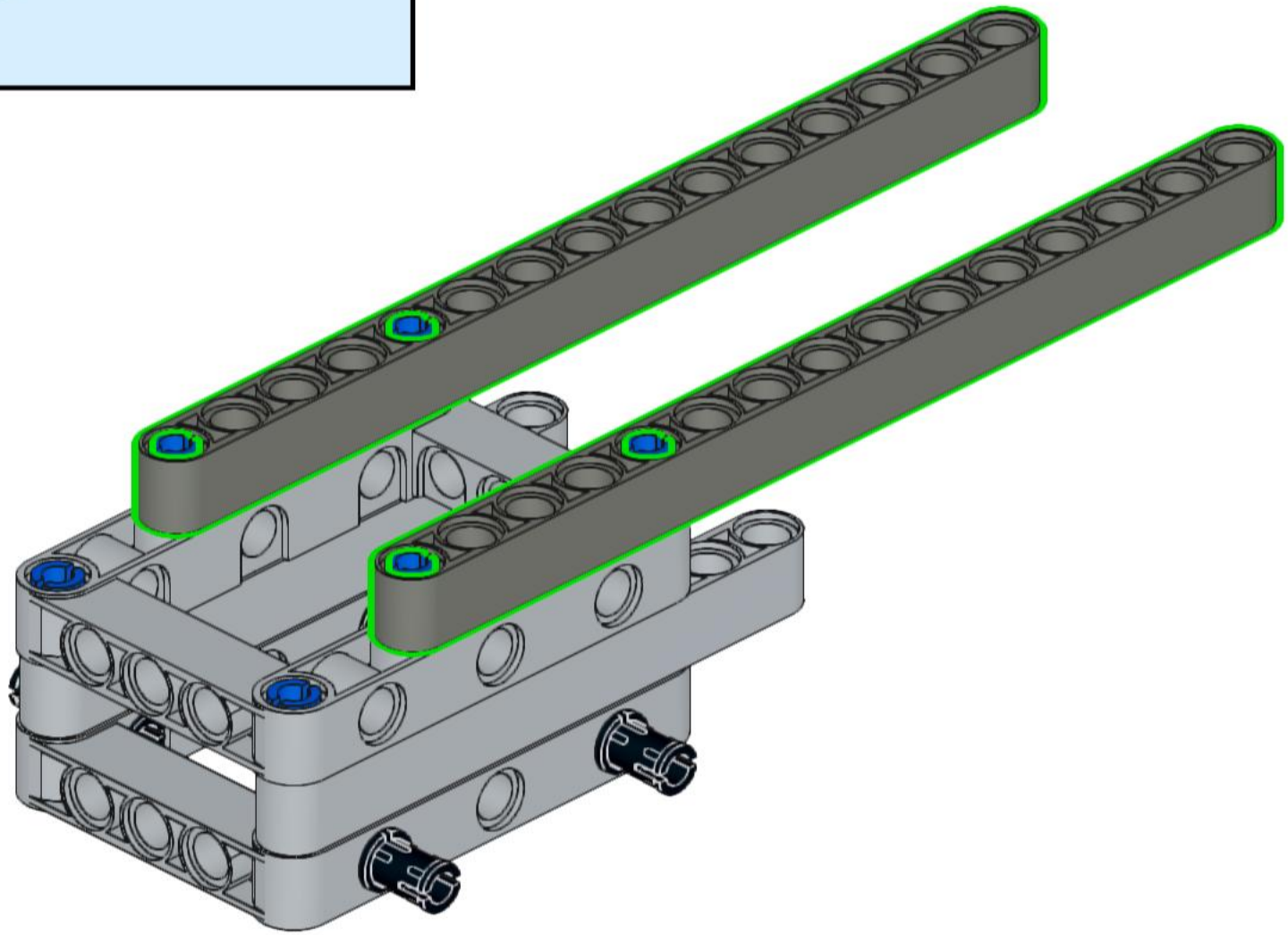

7

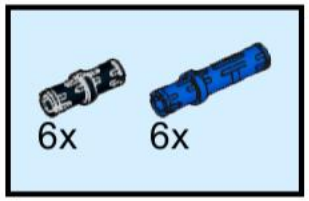

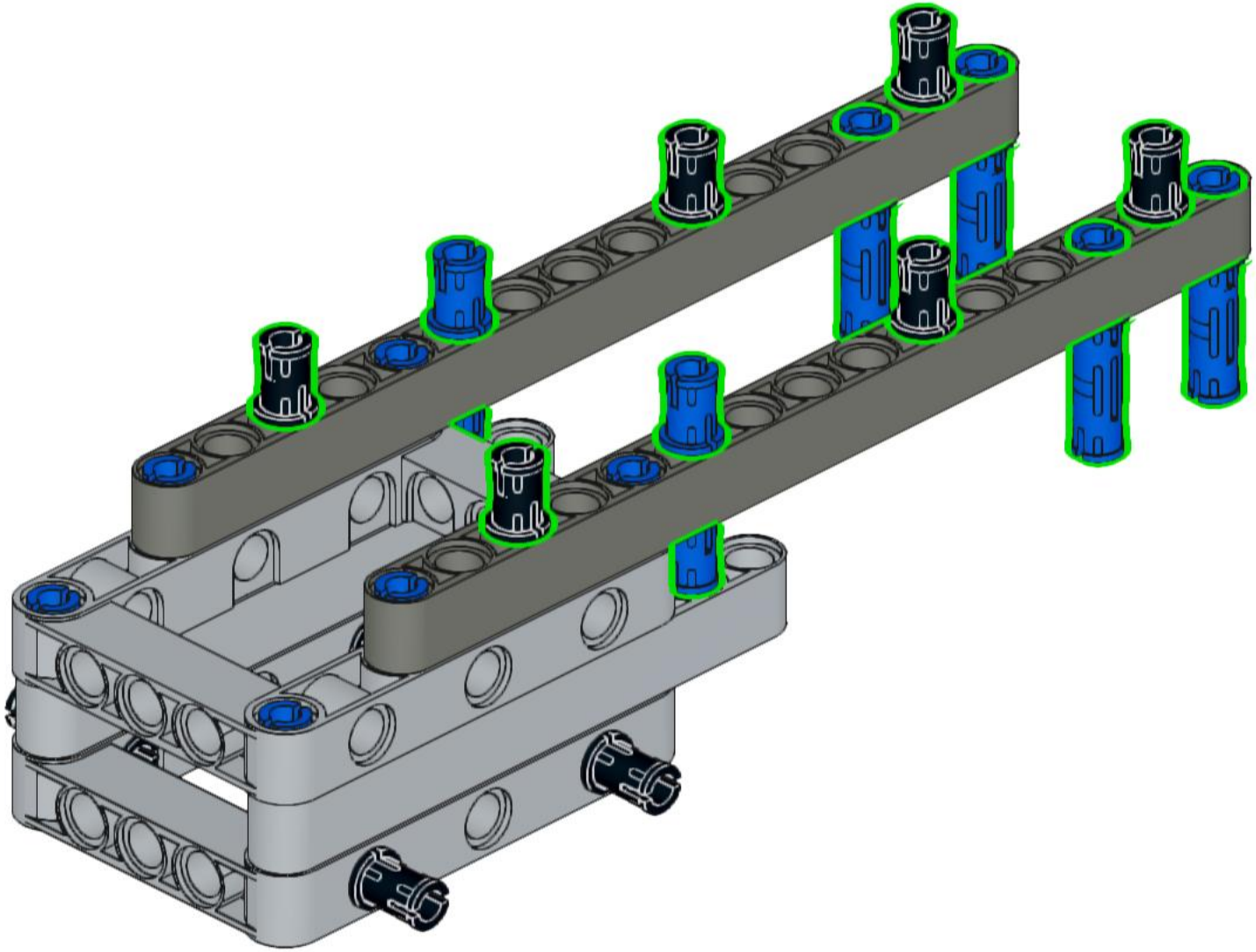

8

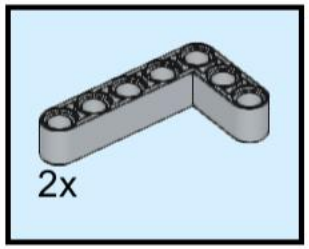

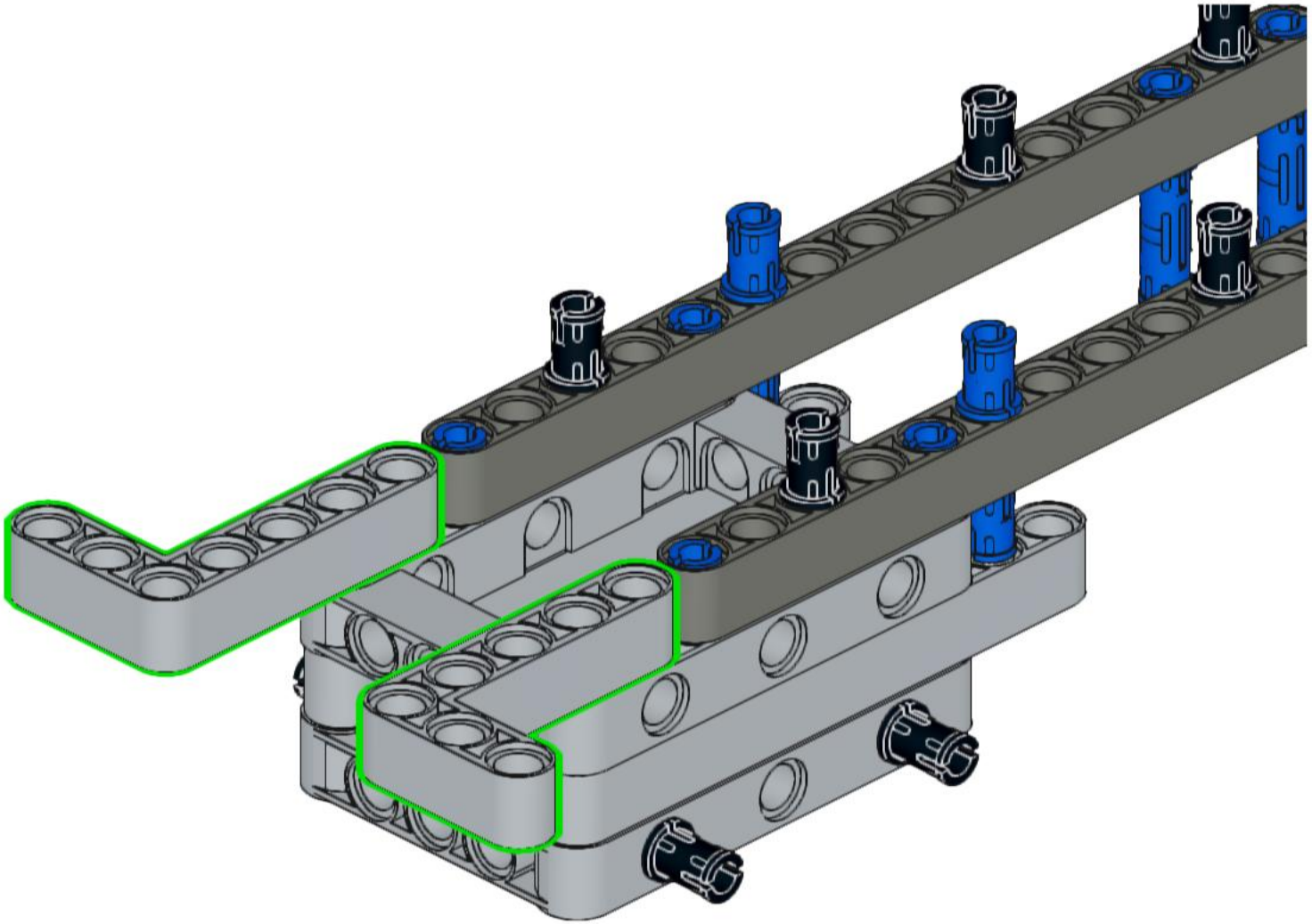

9

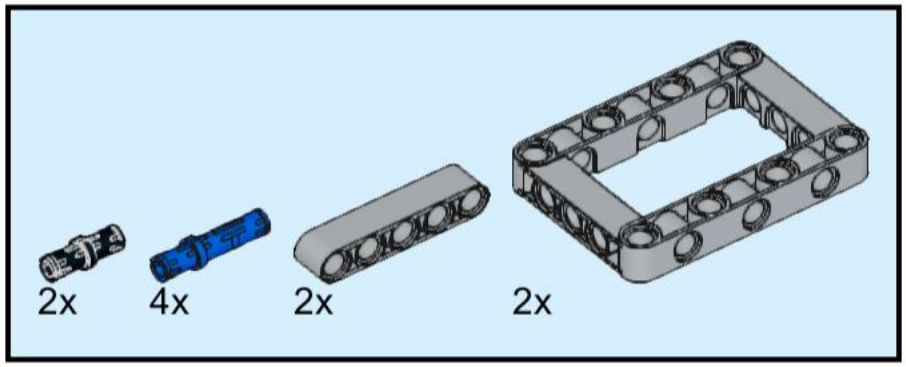

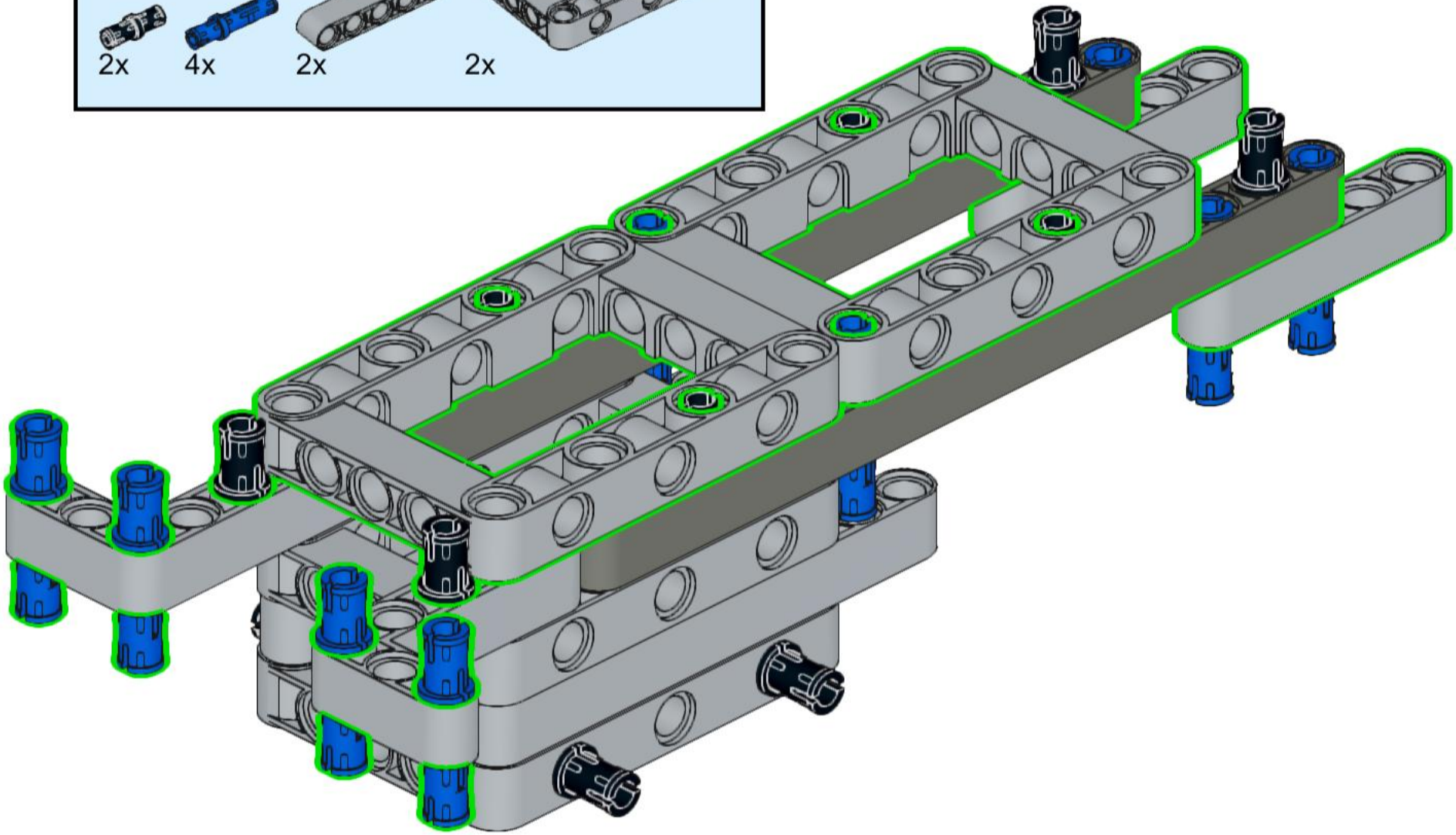

10

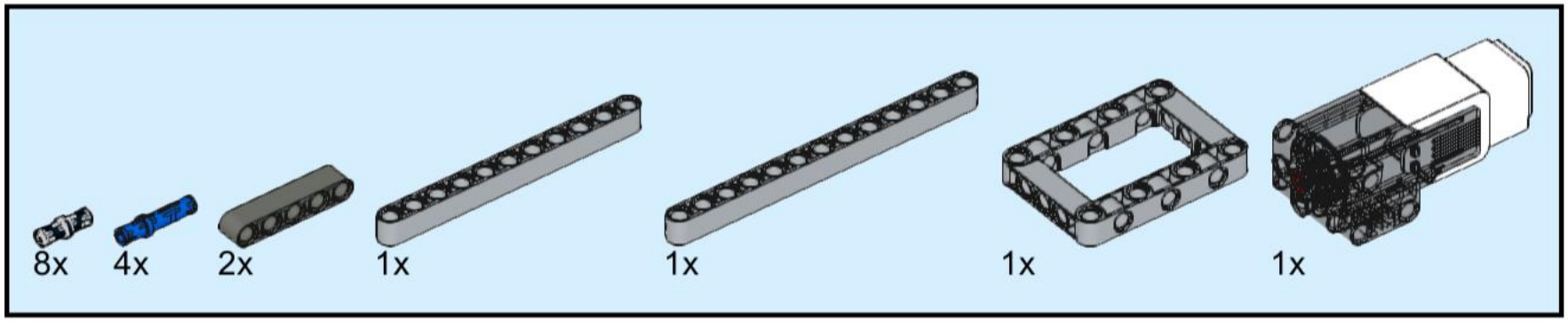

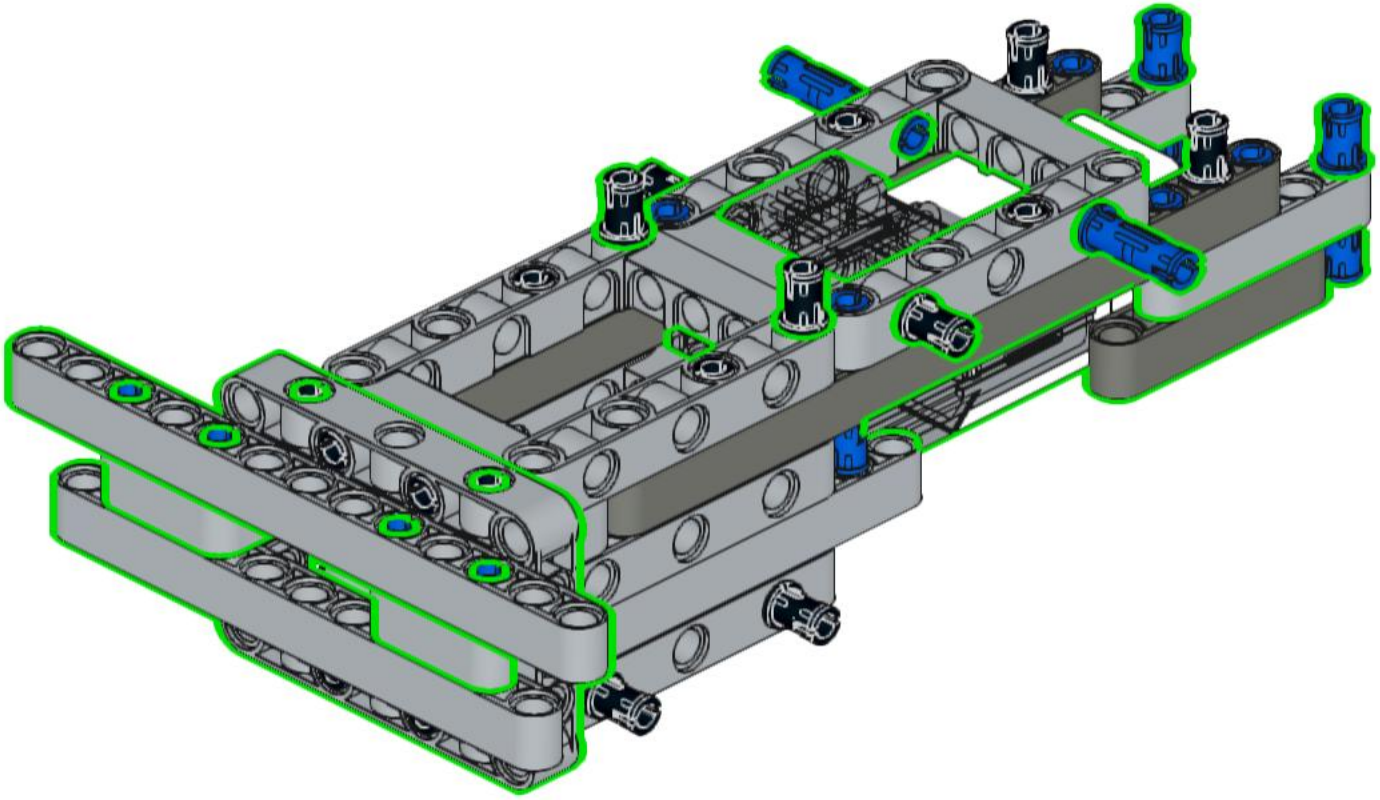

11

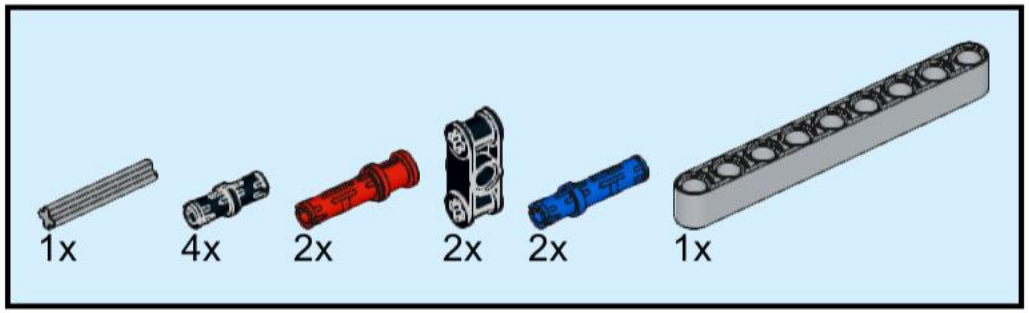

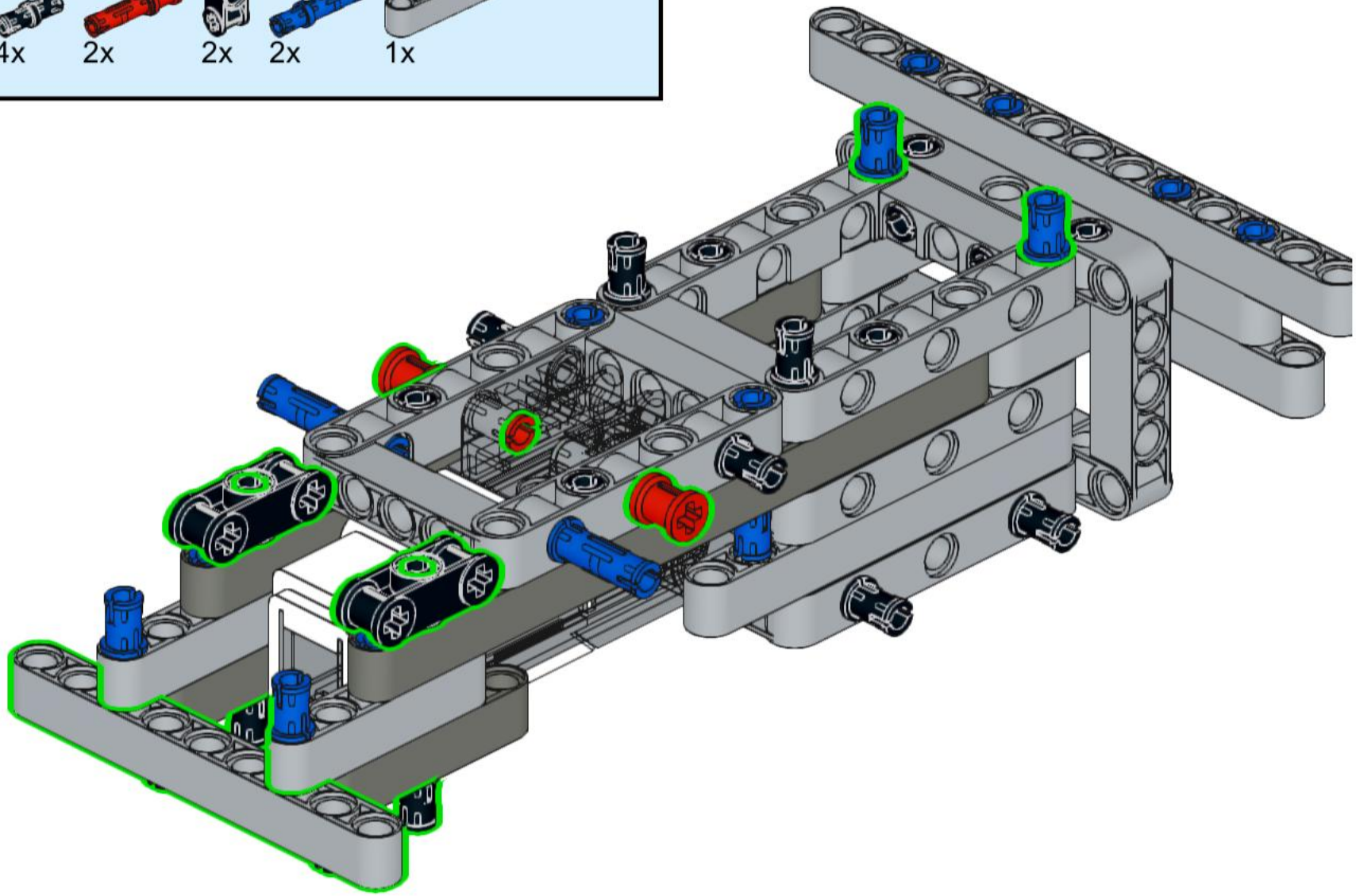

12

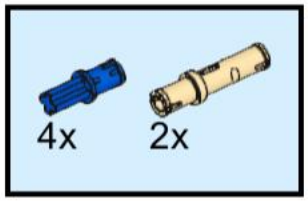

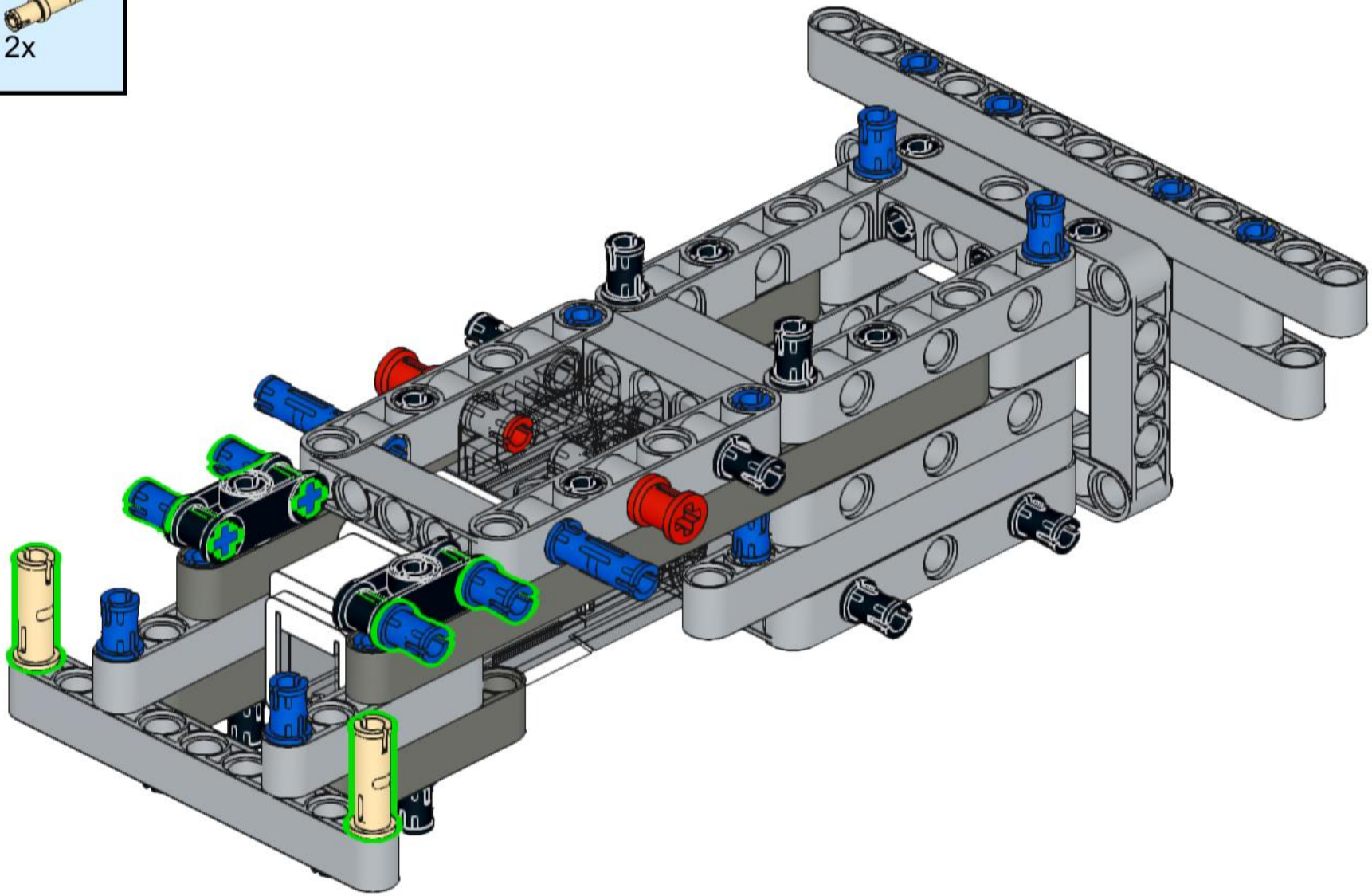

13

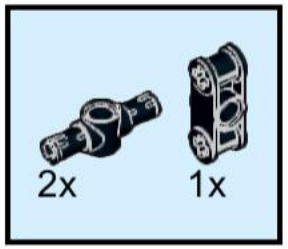

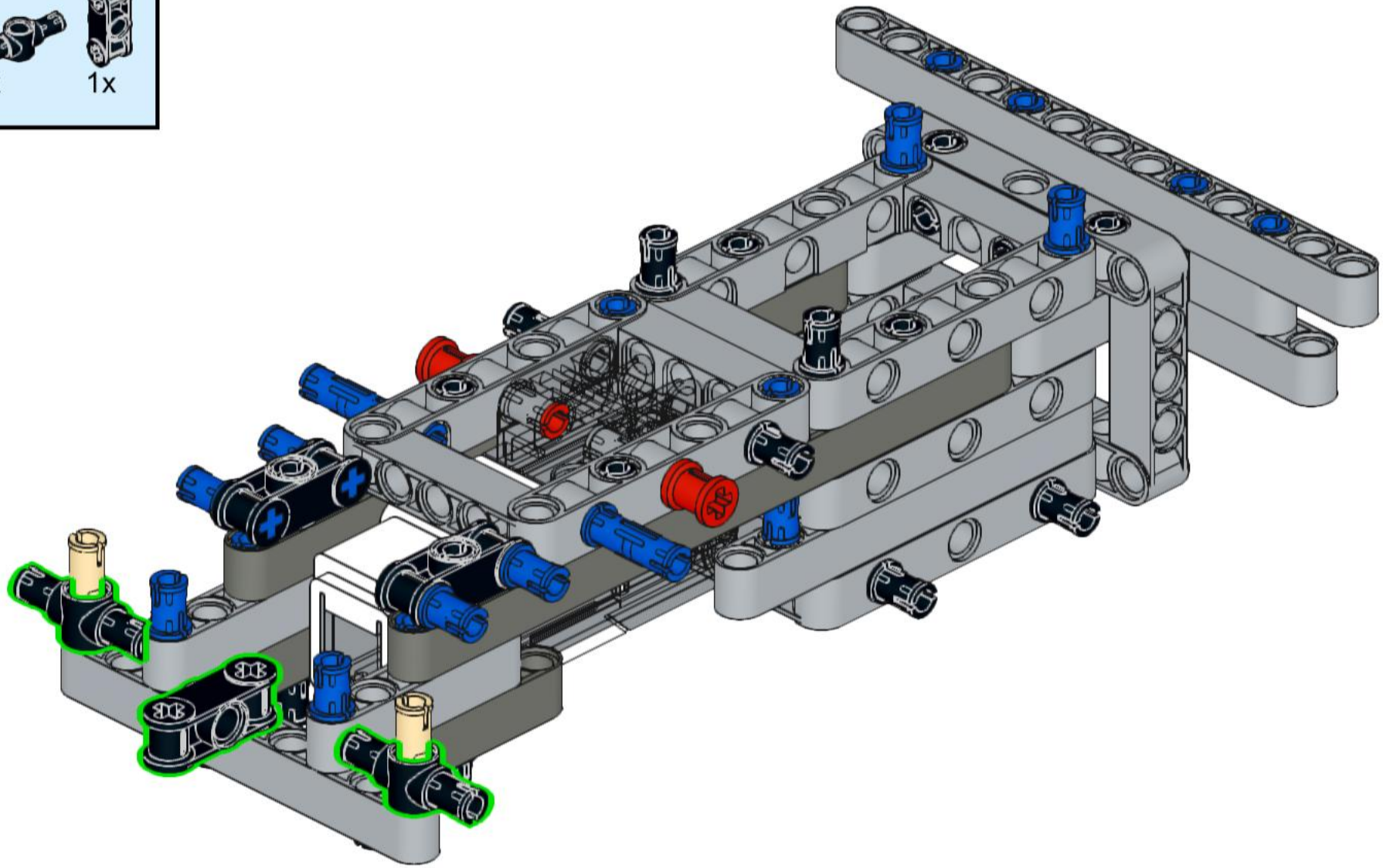

14

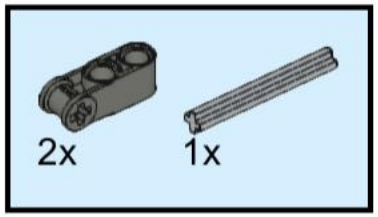

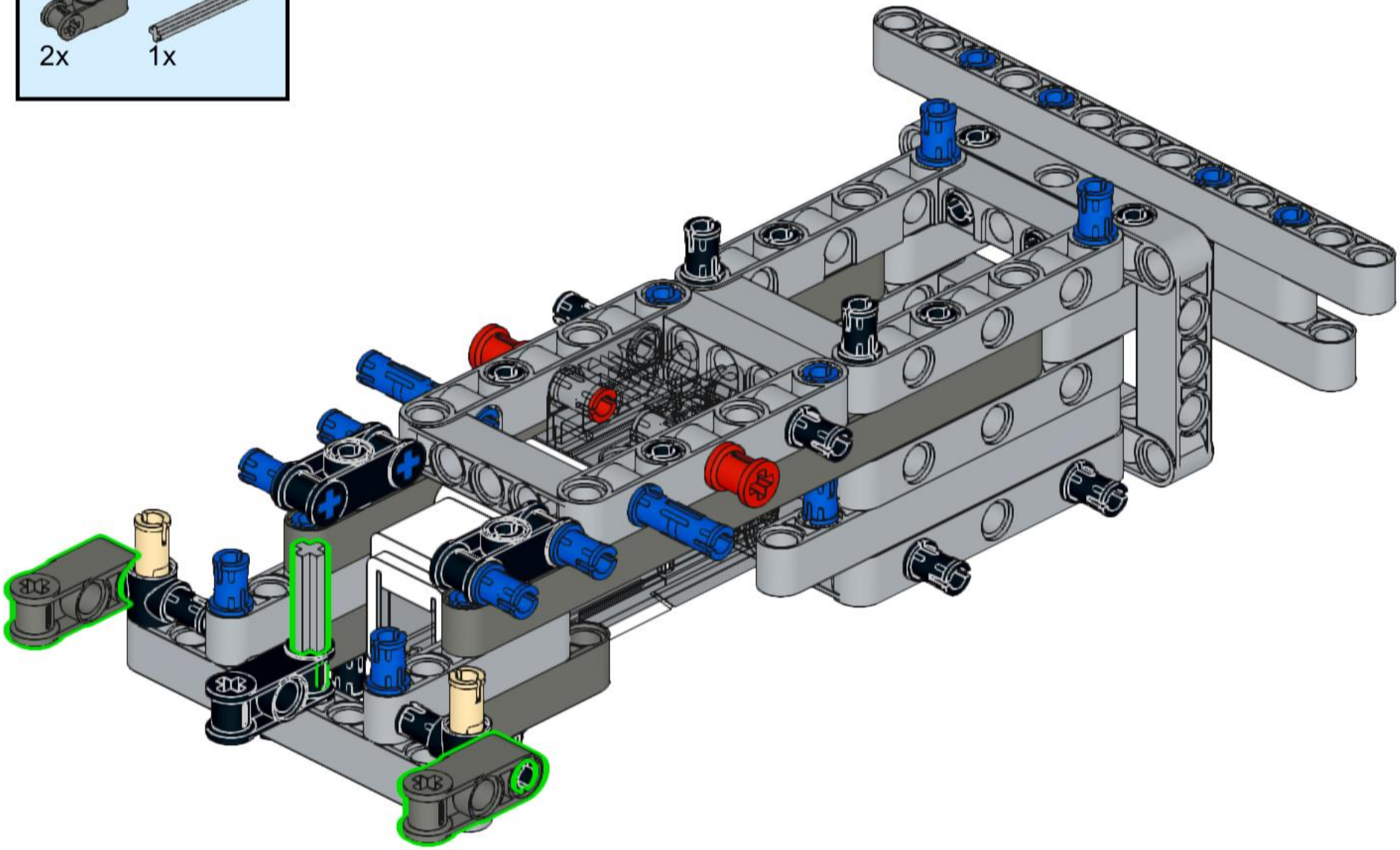

15

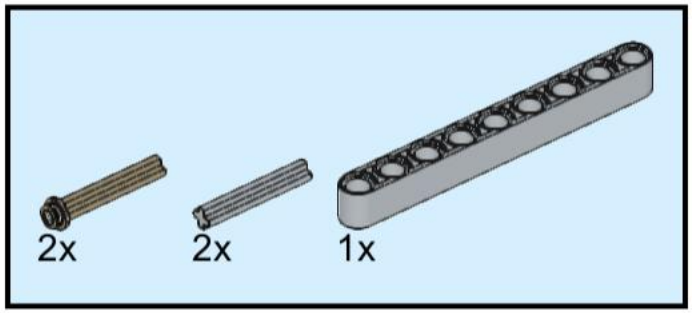

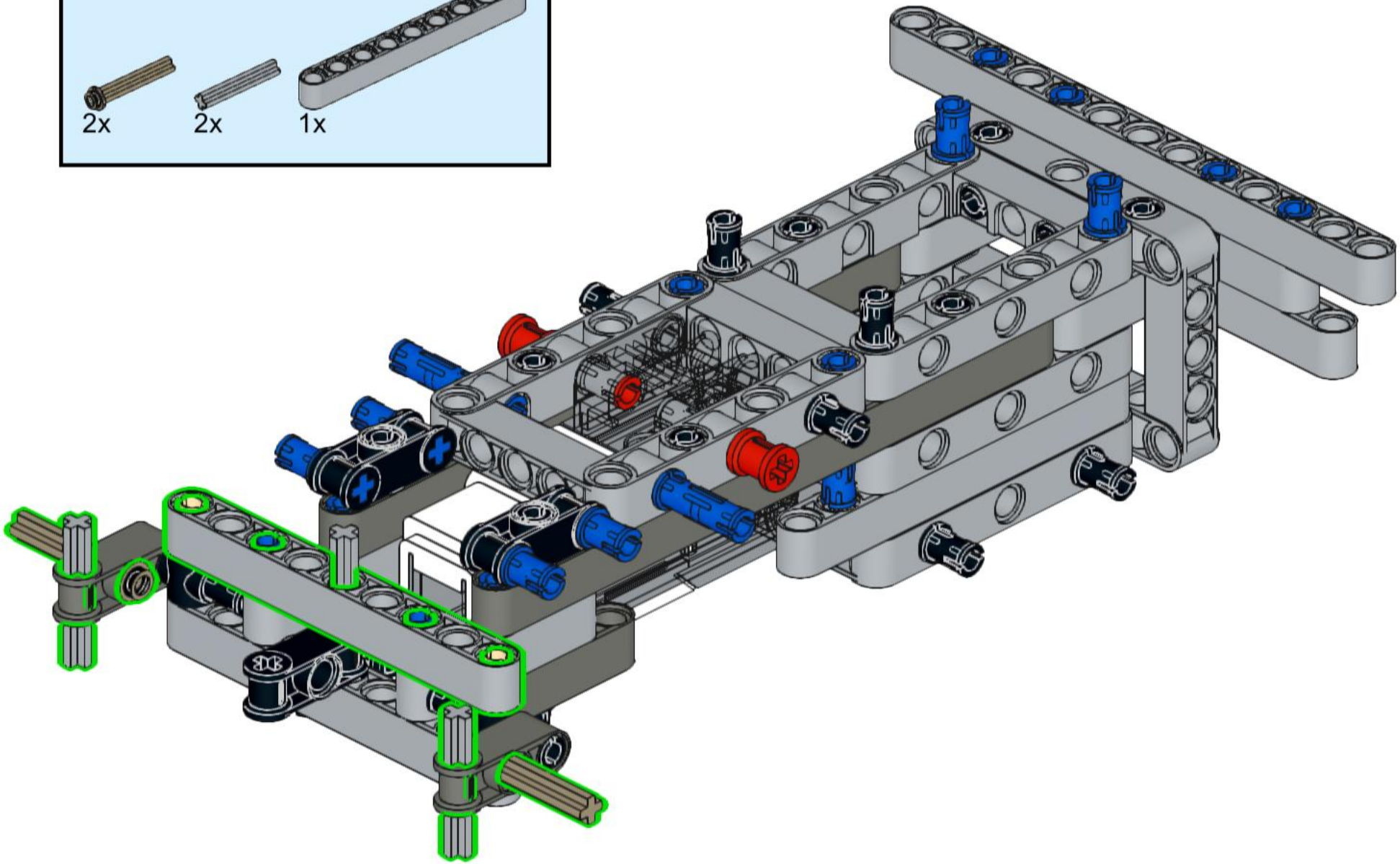

16

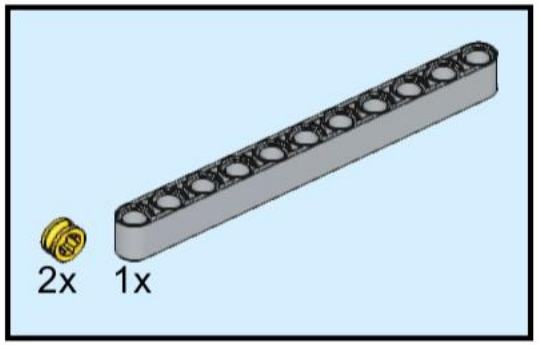

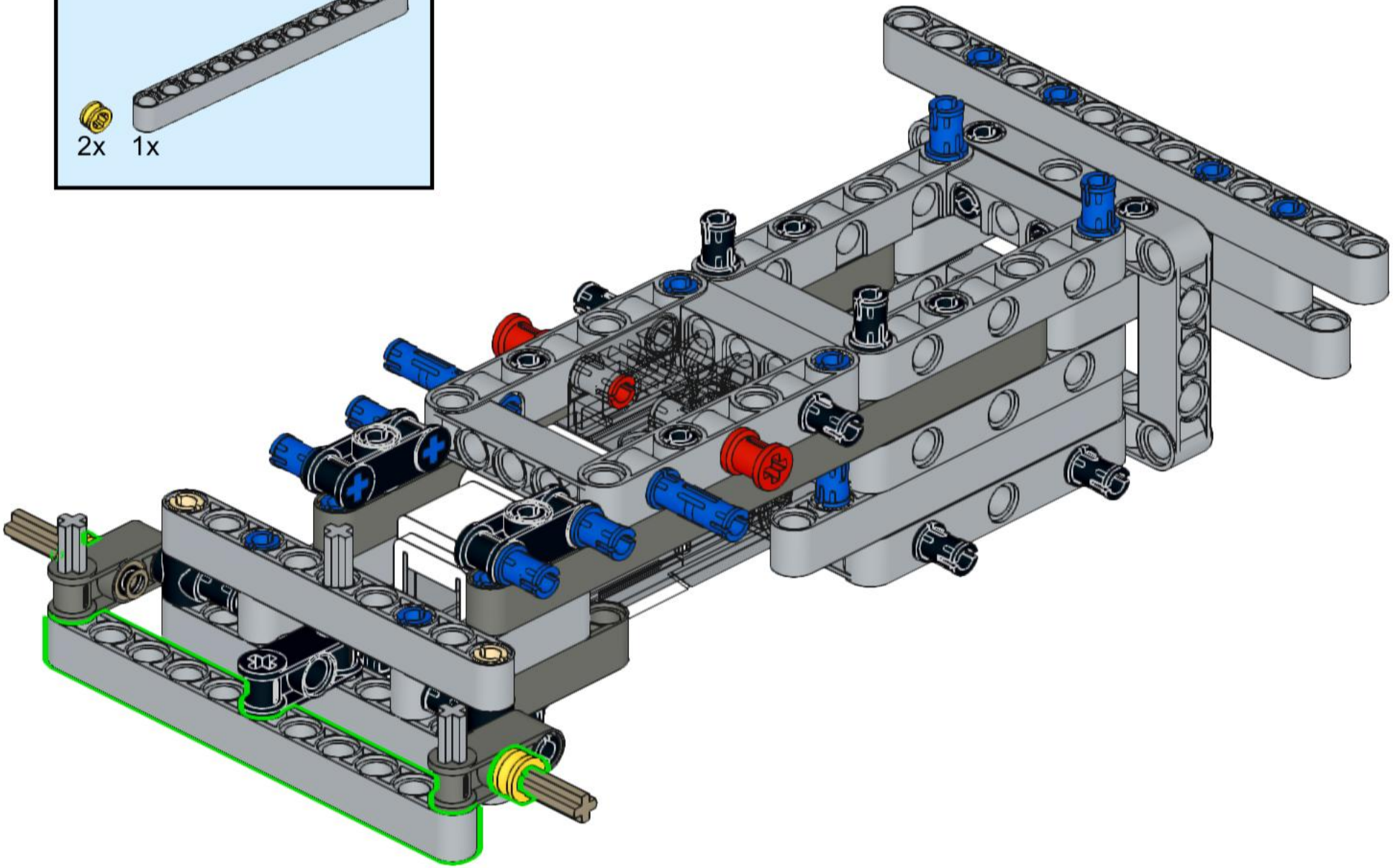

17

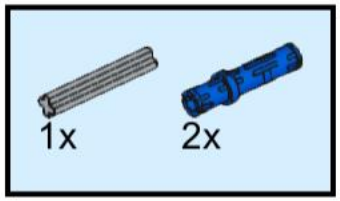

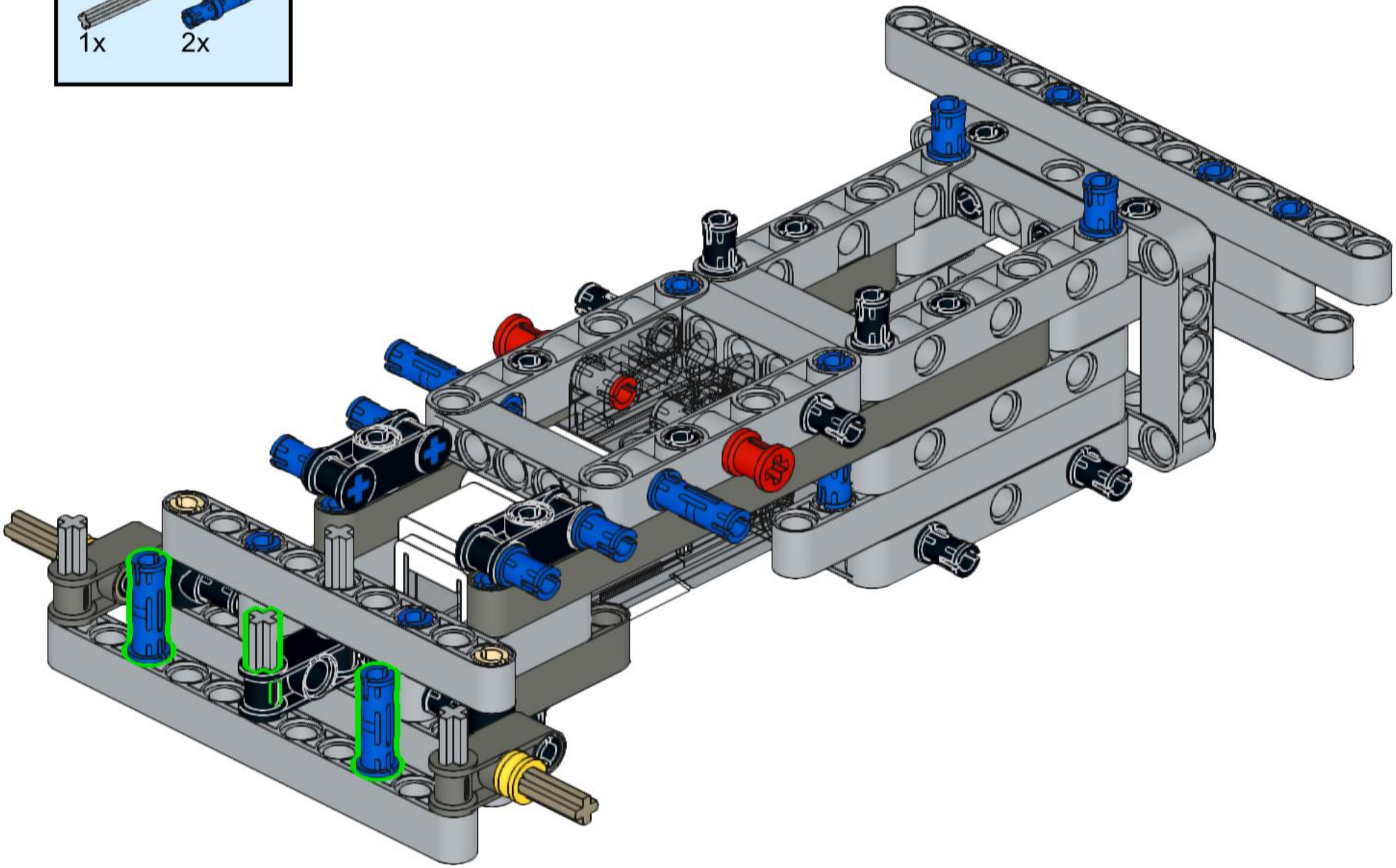

18

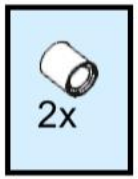

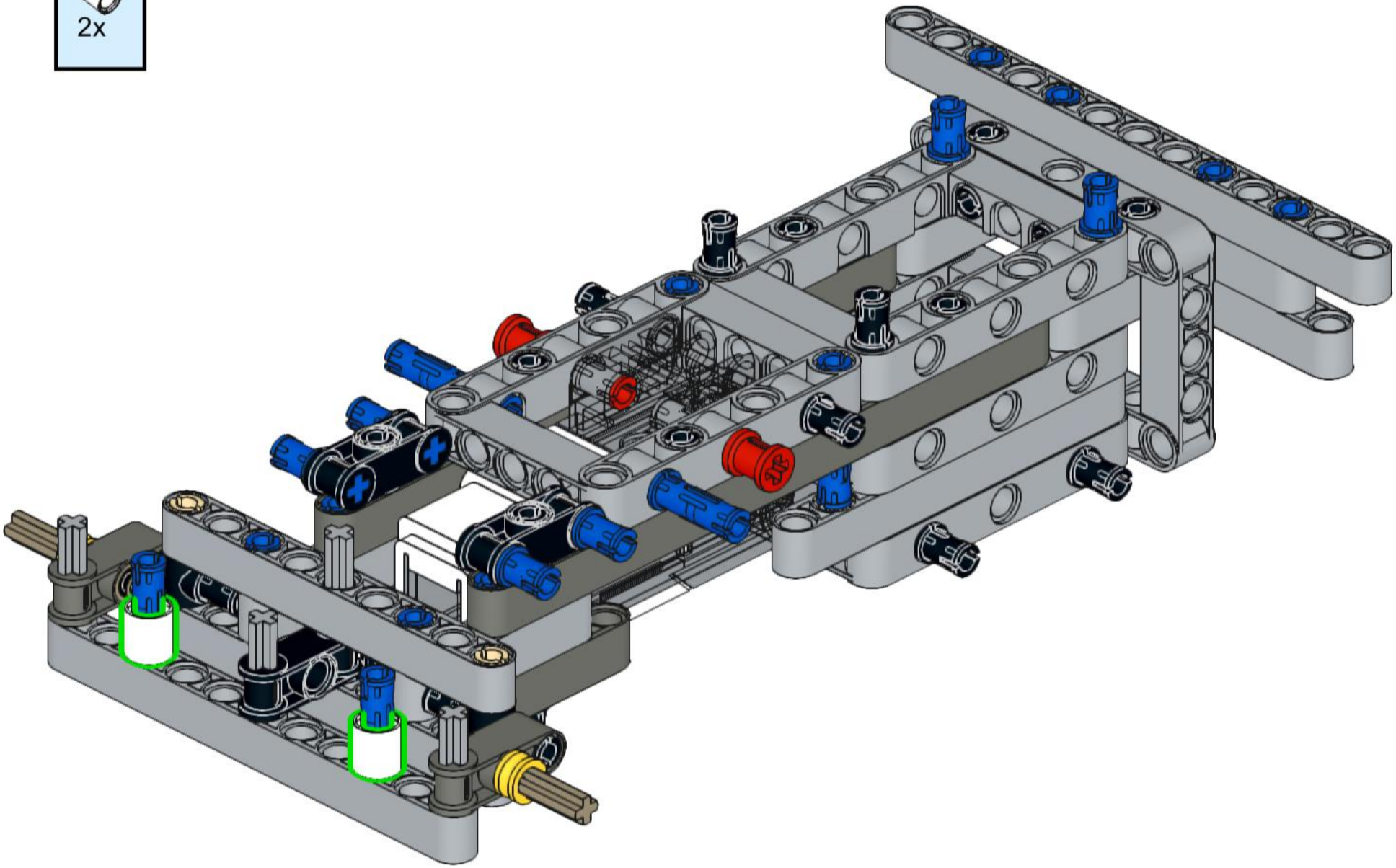

19

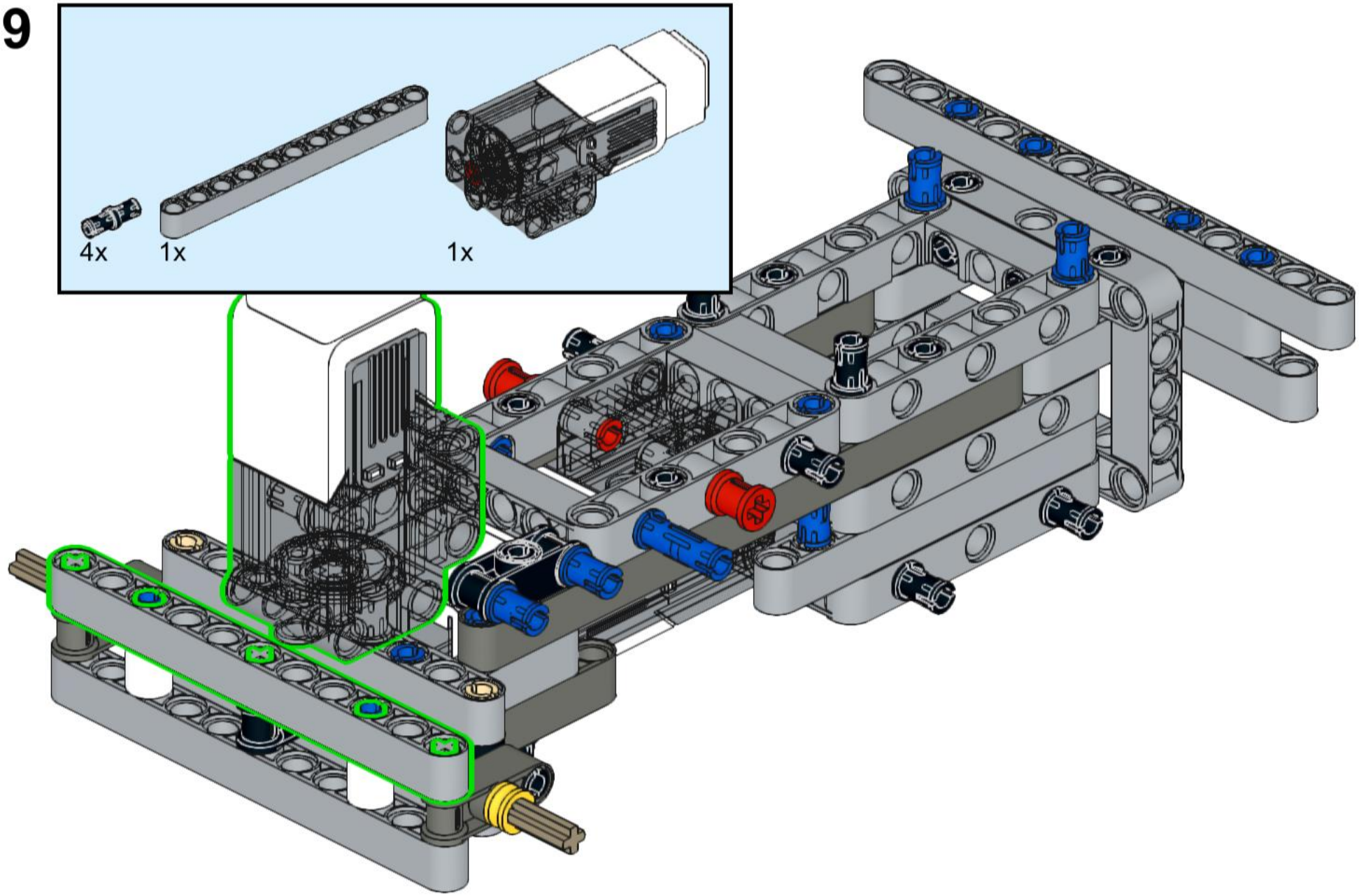

20

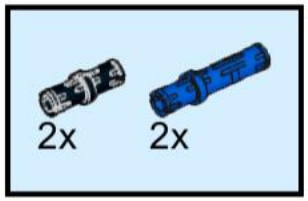

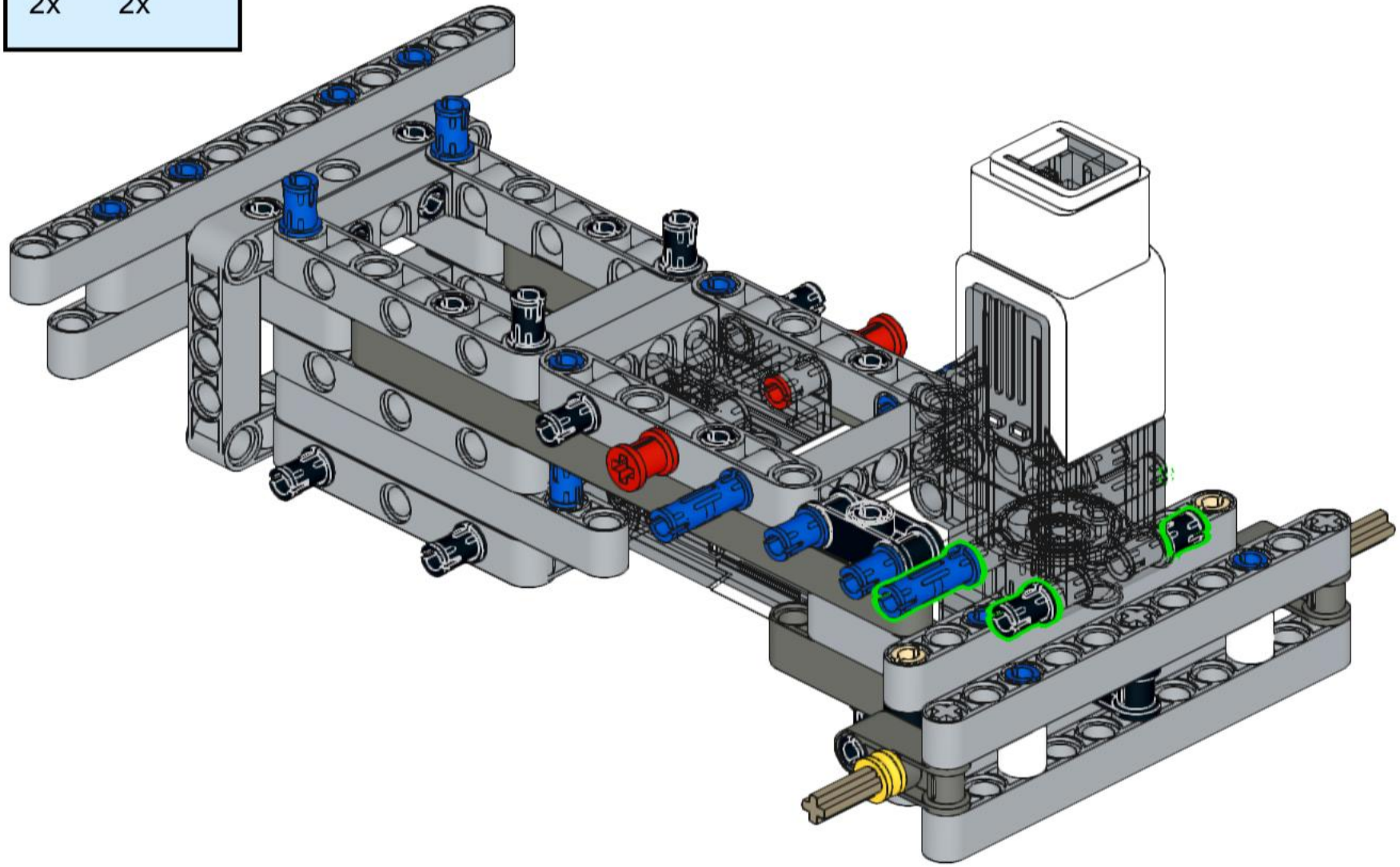

21

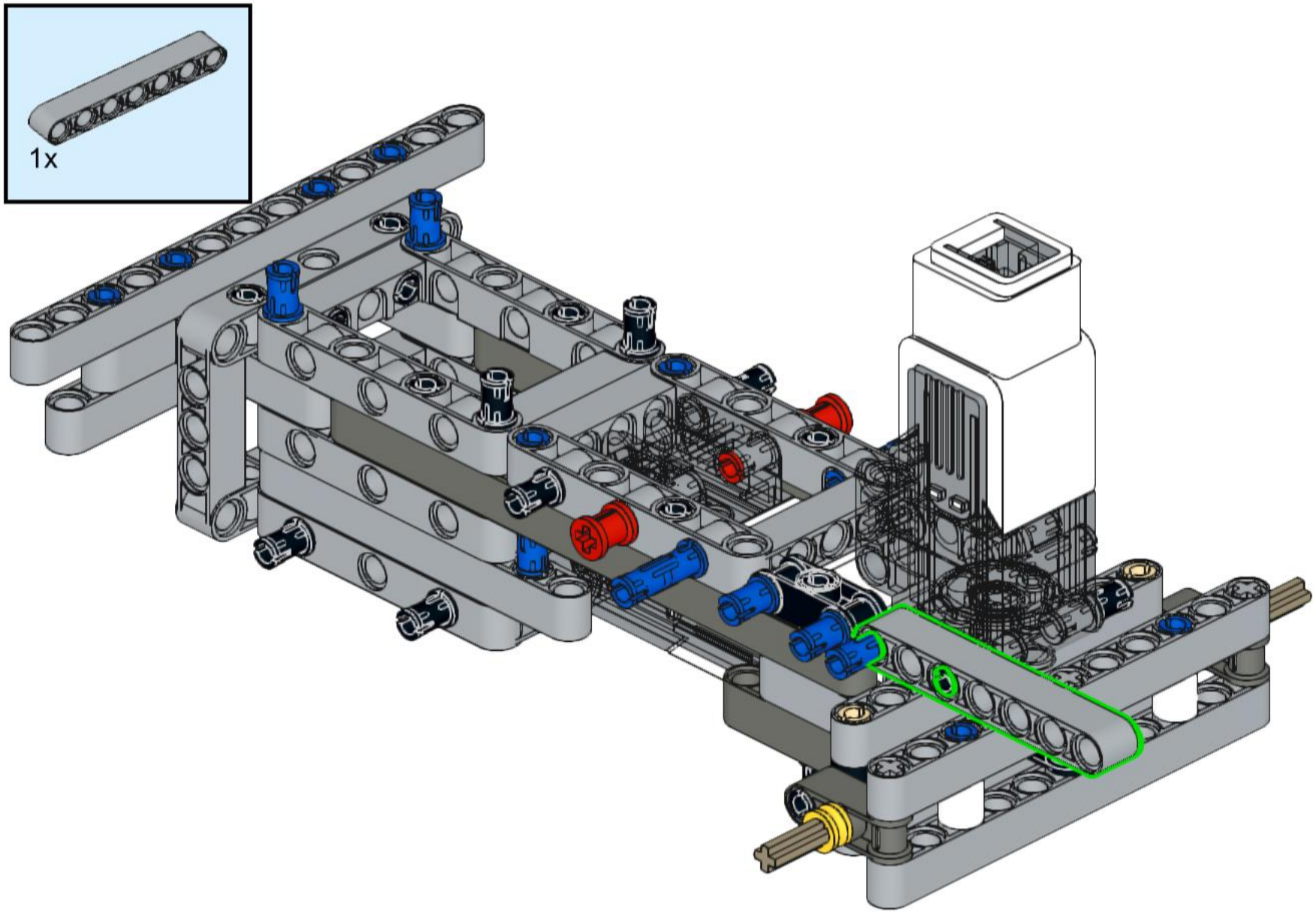

22

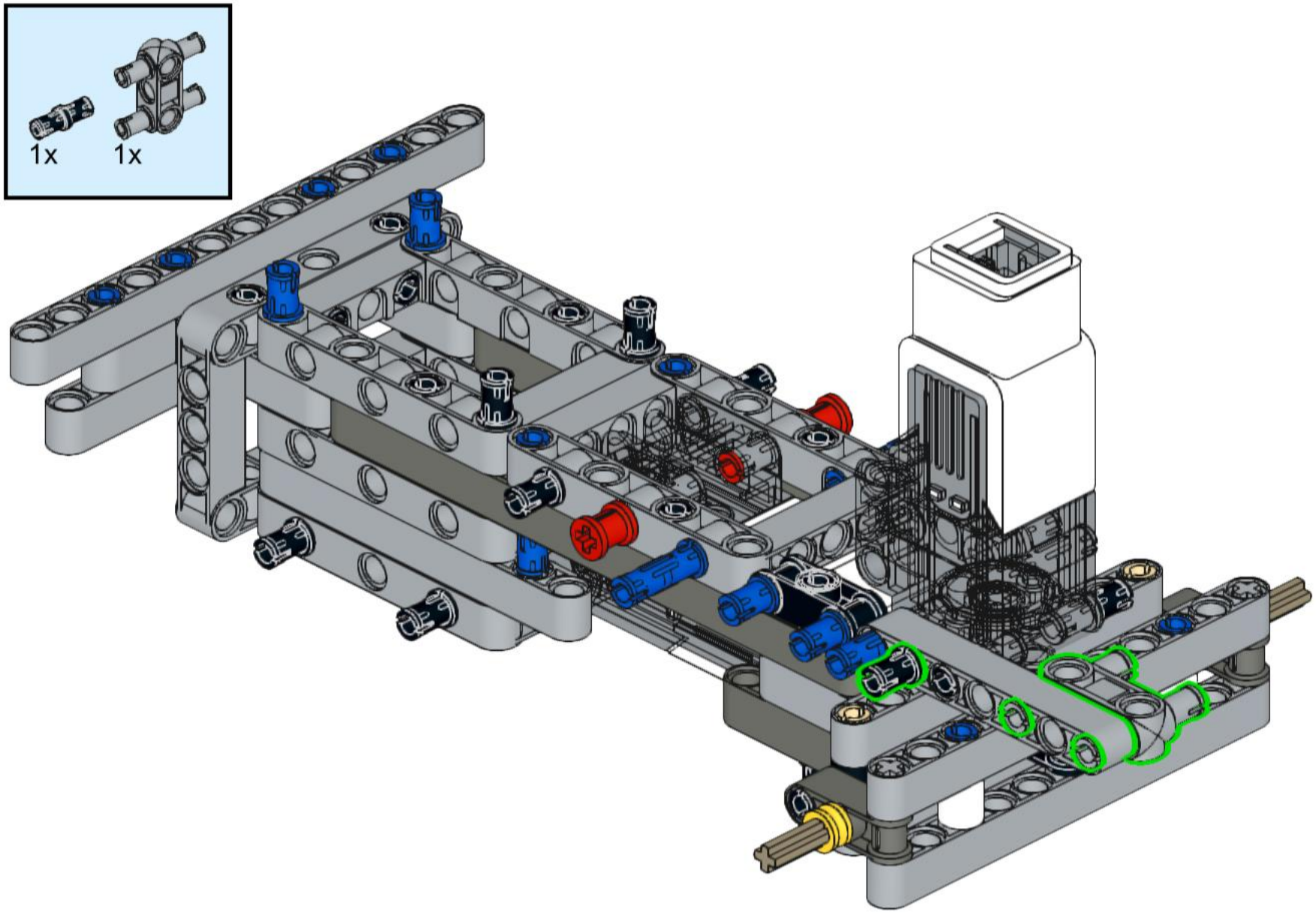

23

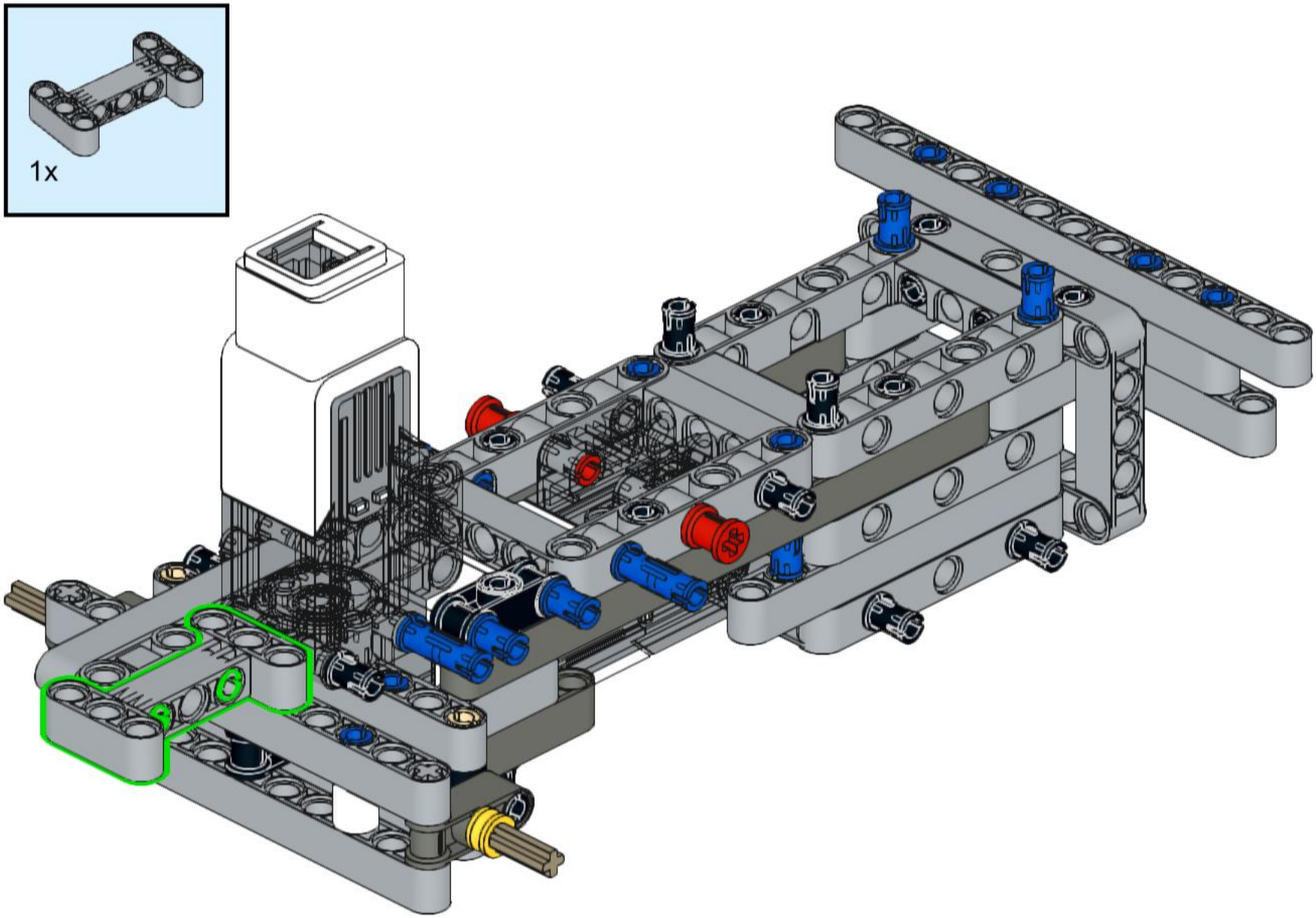

24

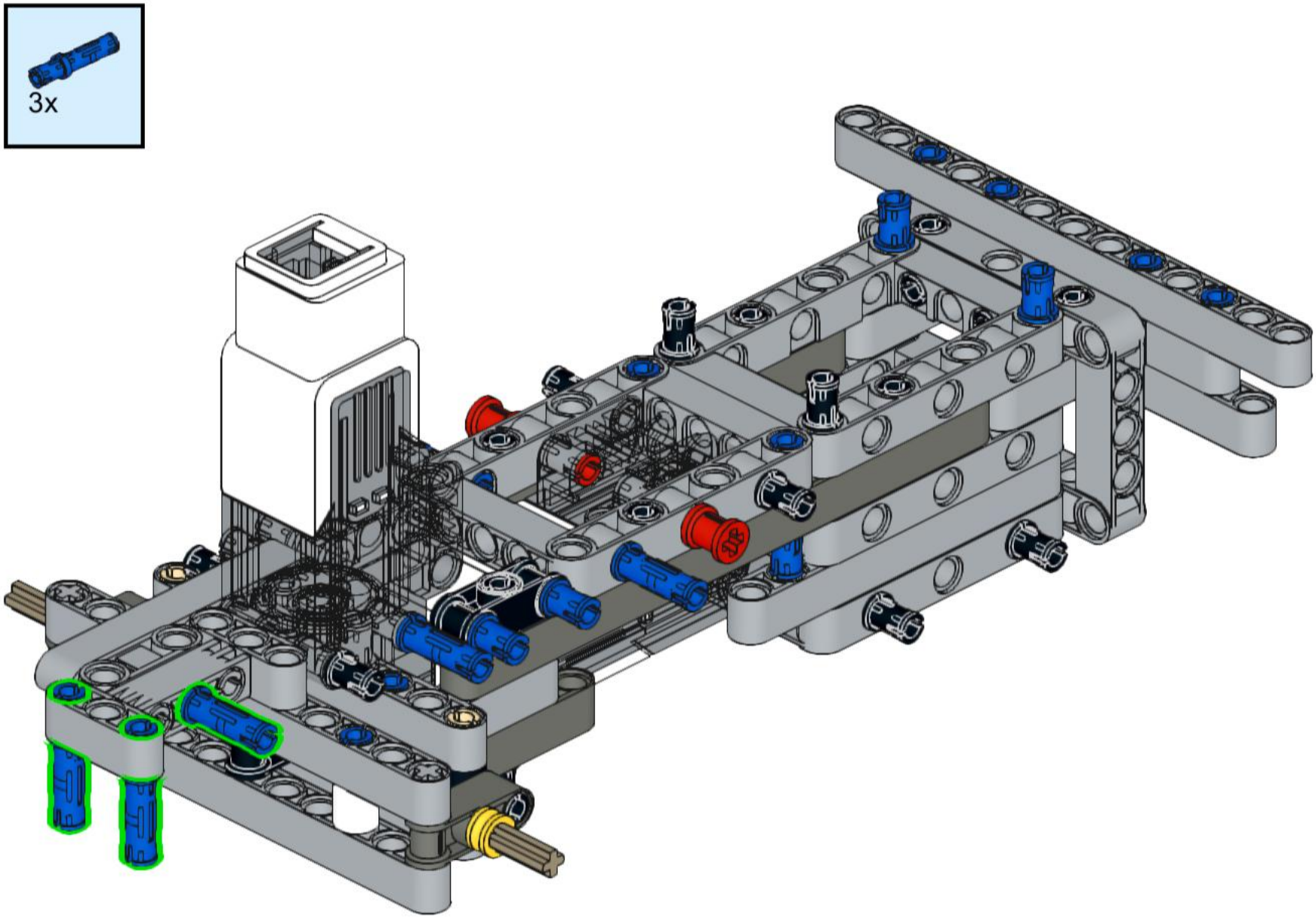

25

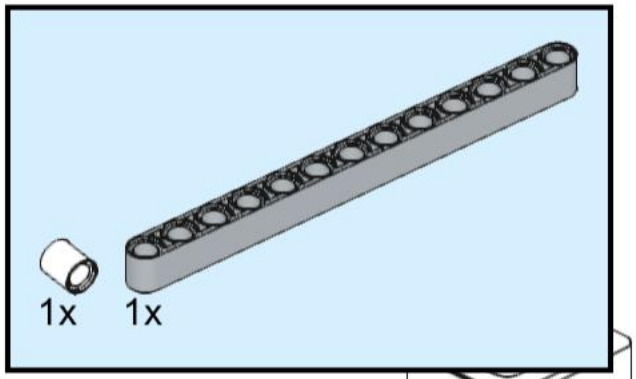

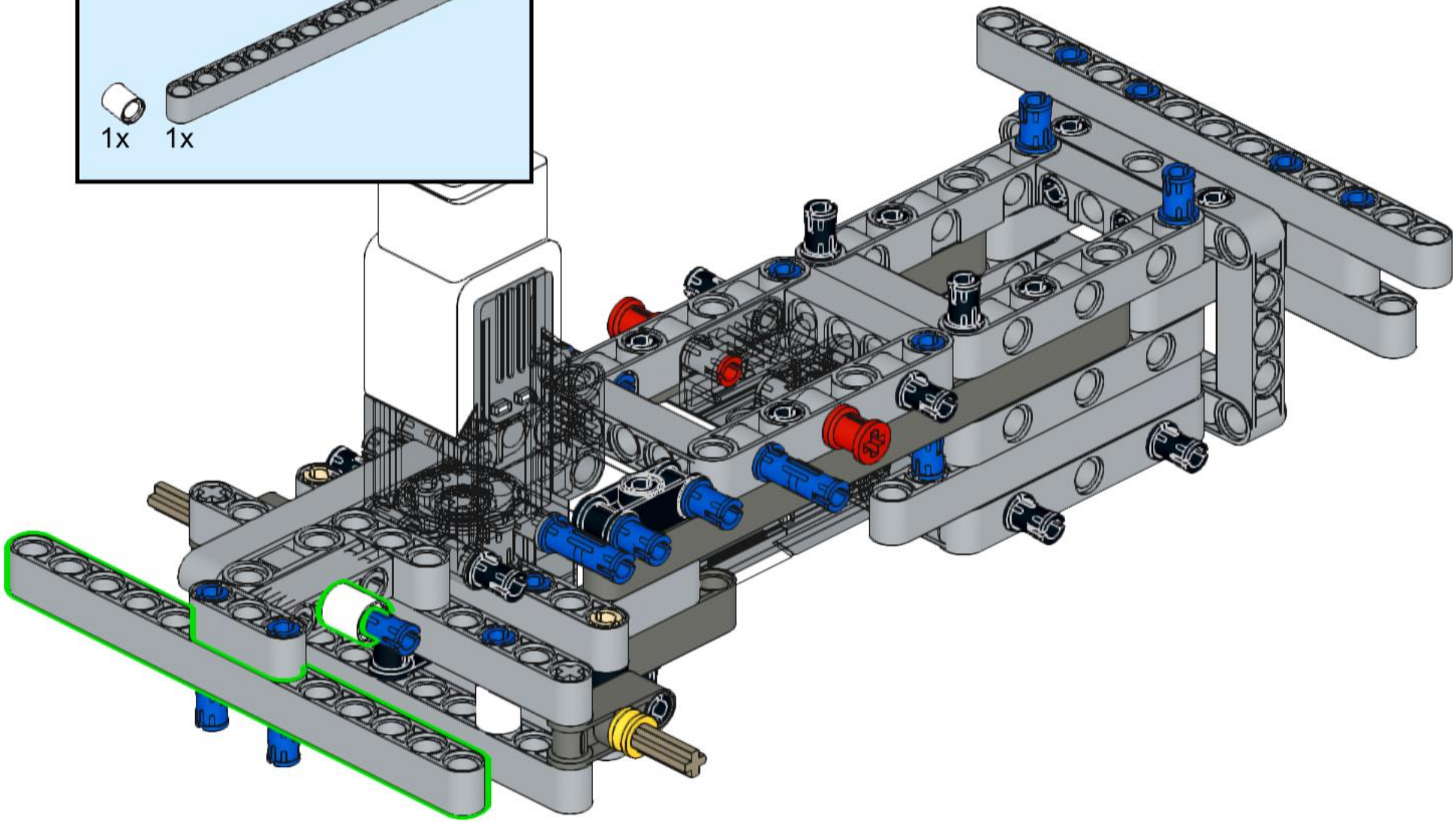

26

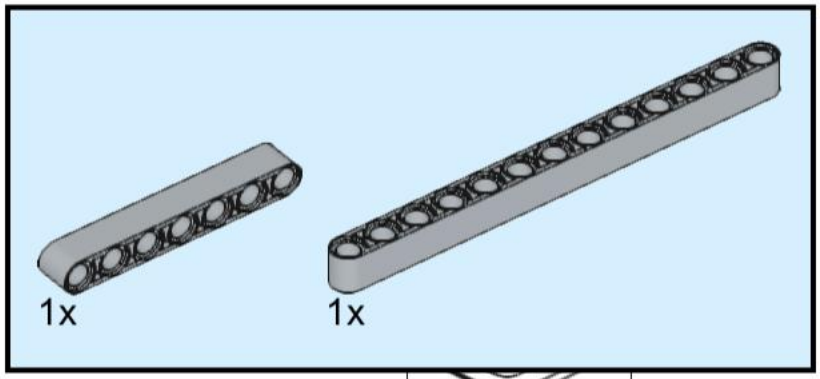

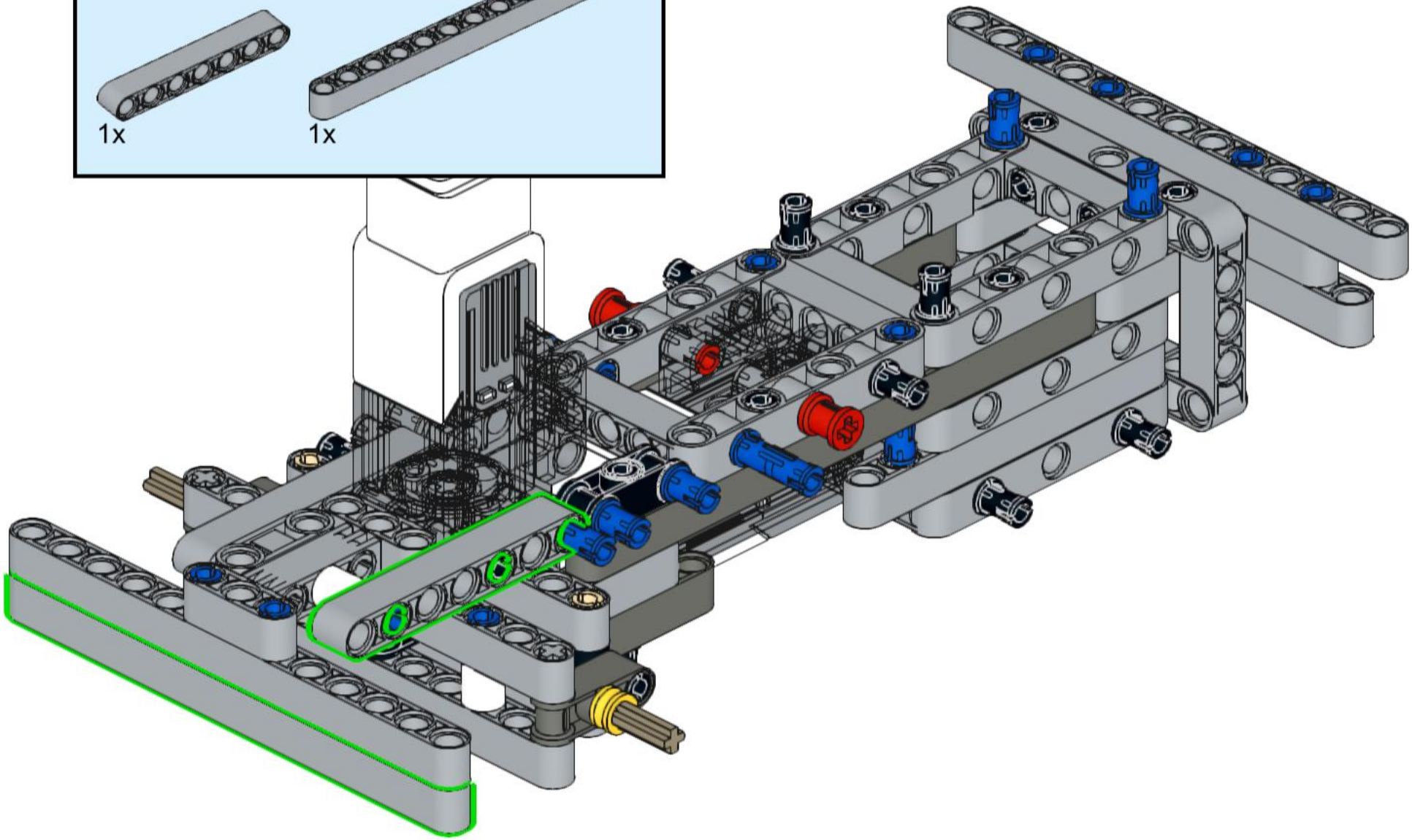

27

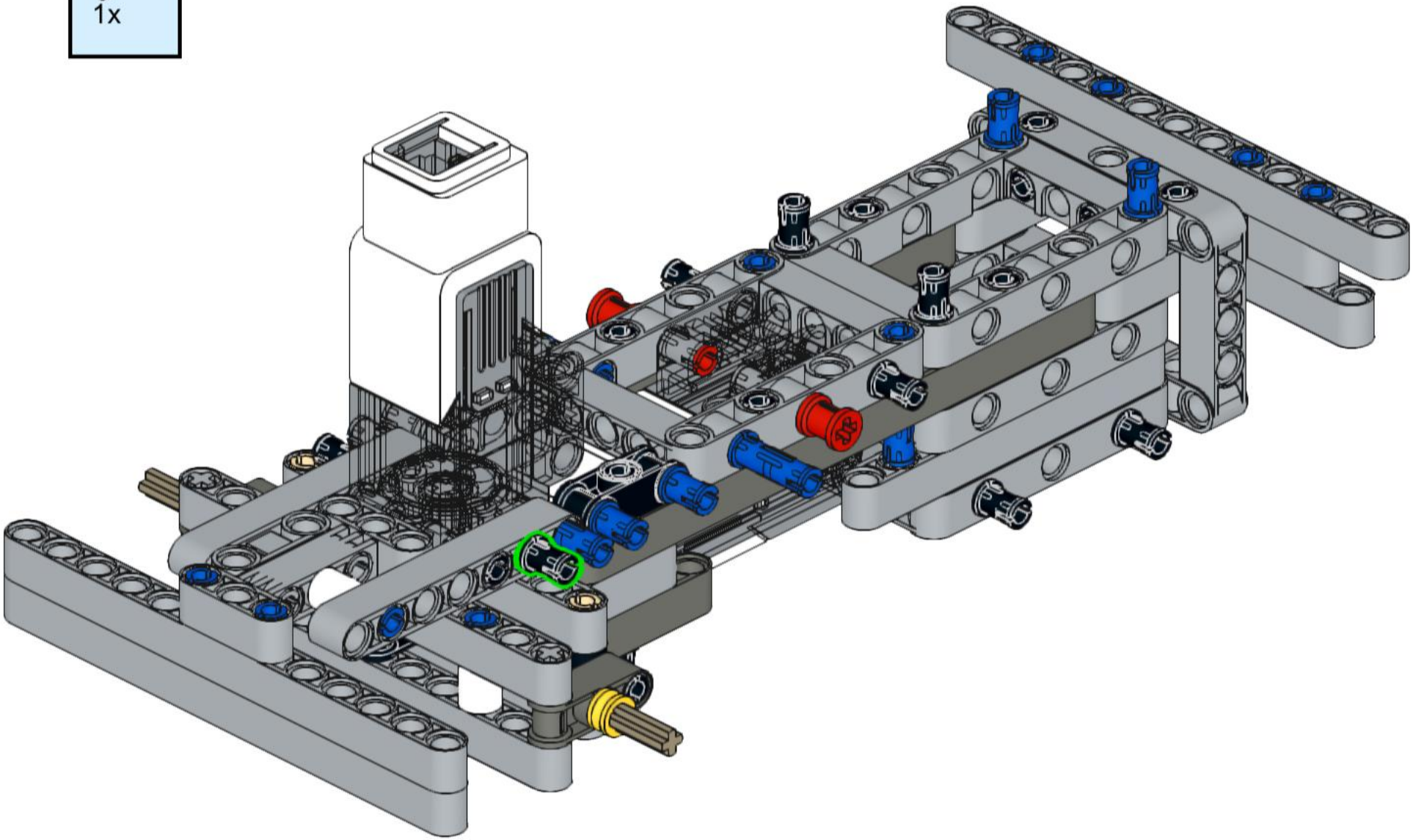

28

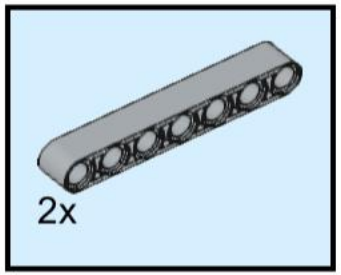

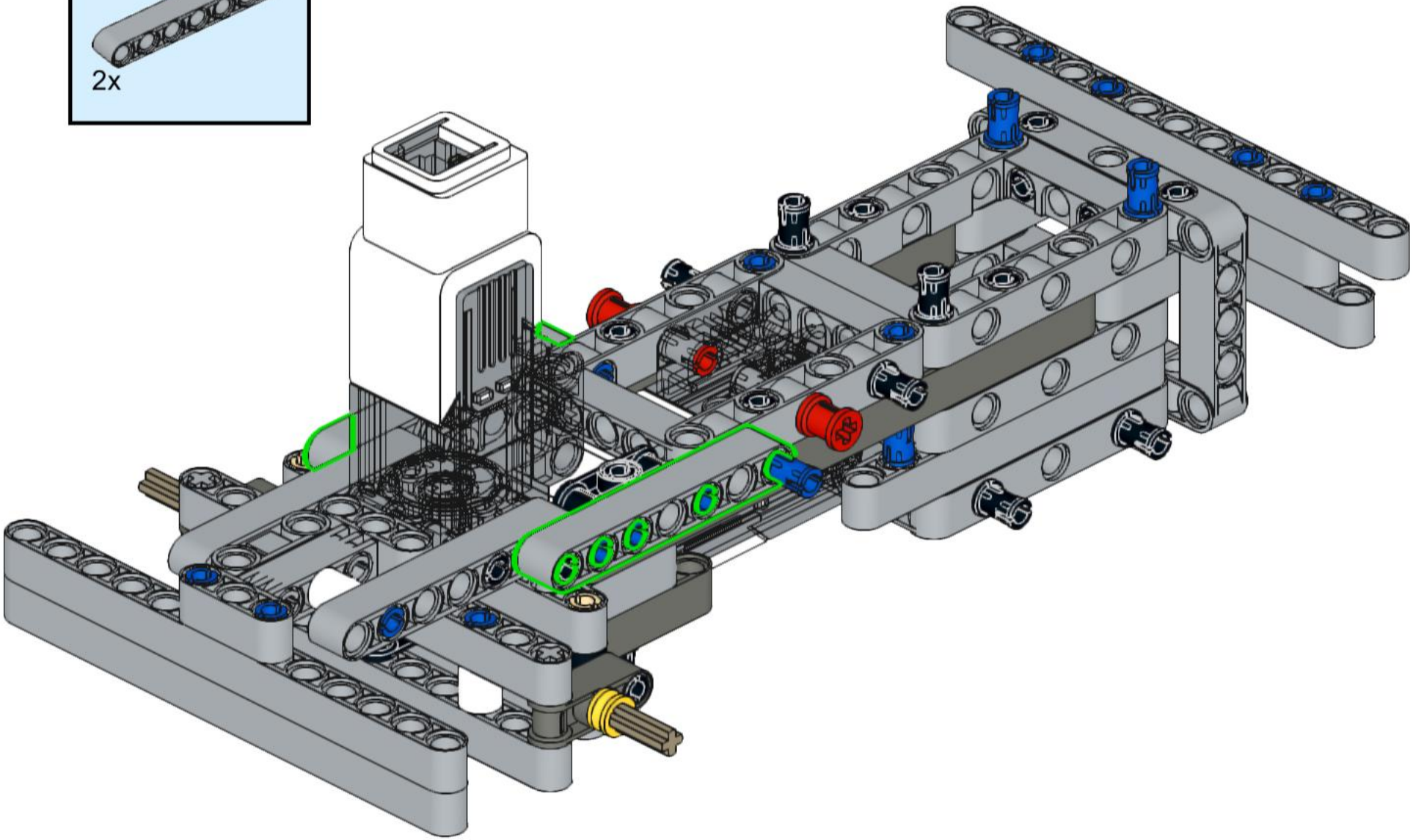

29

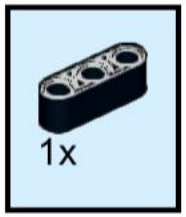

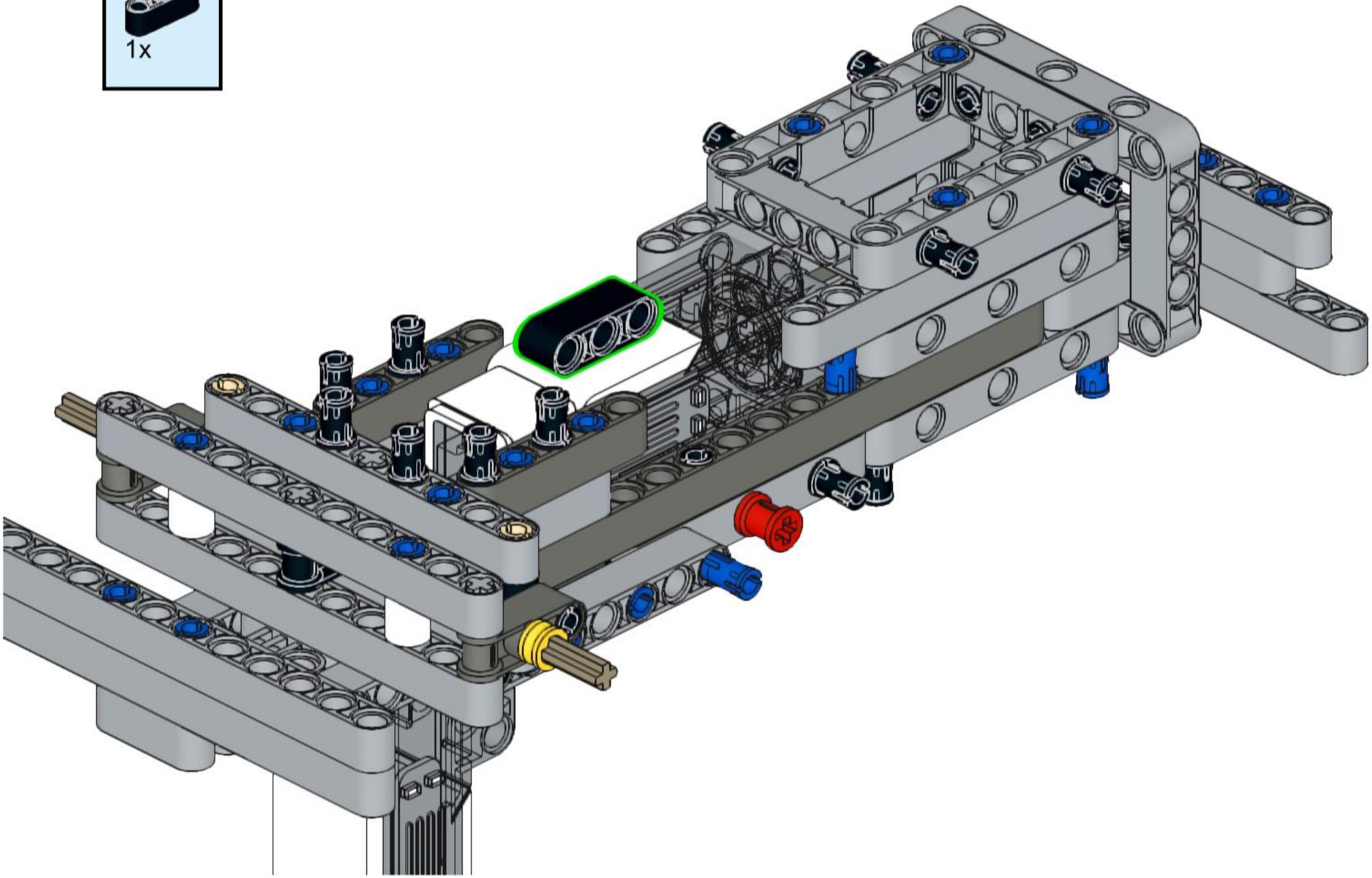

30

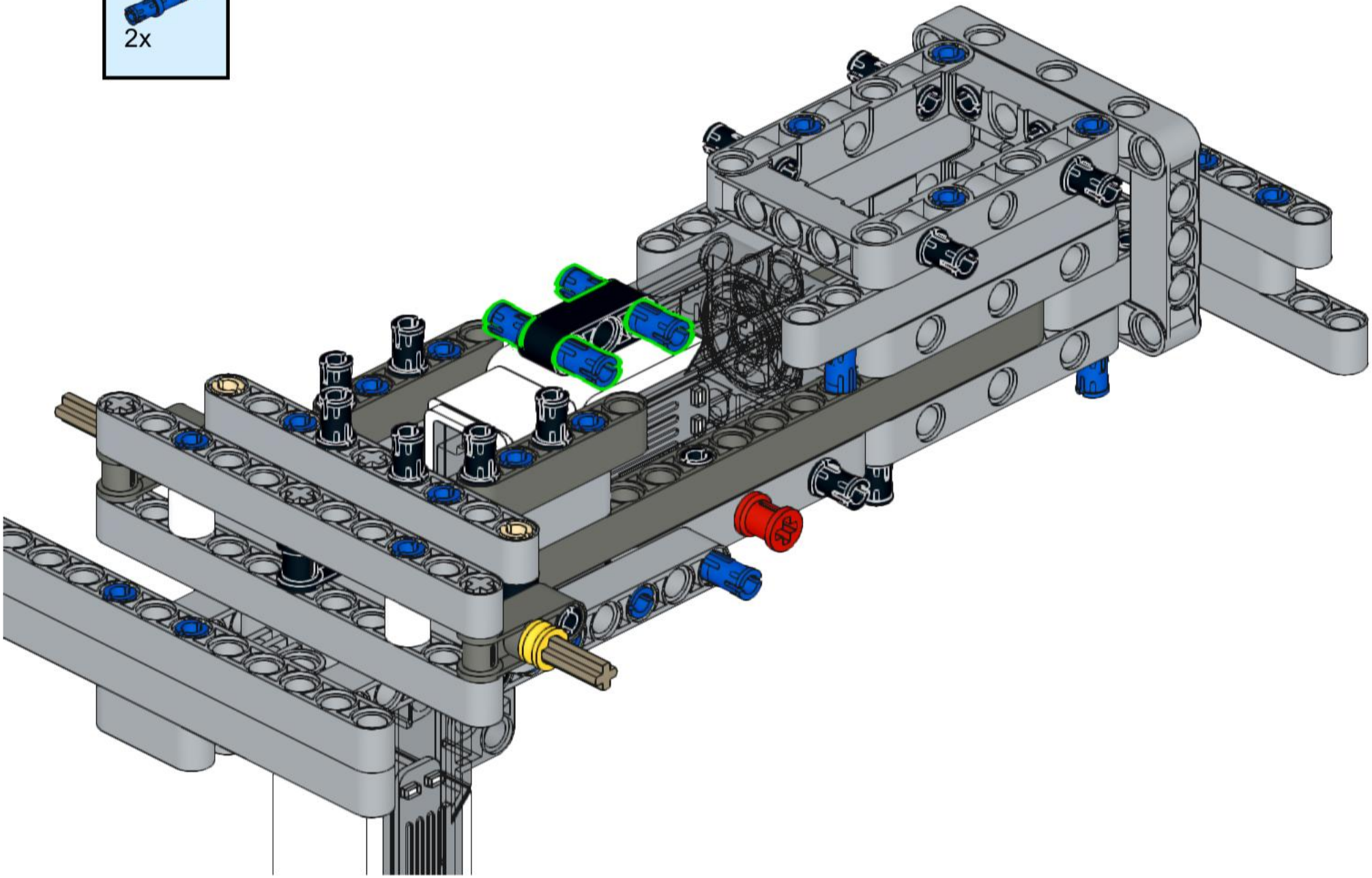

31

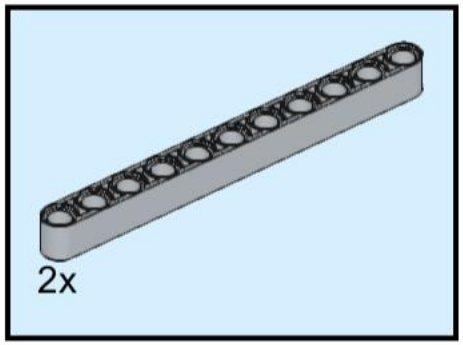

32

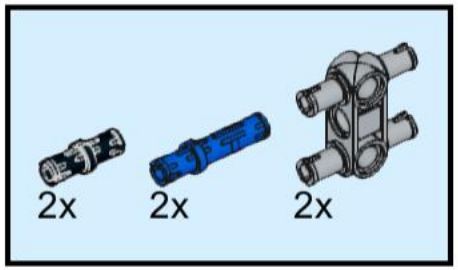

33

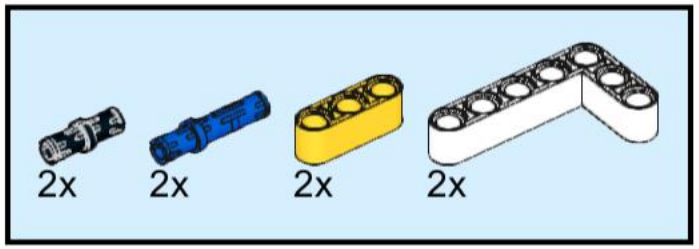

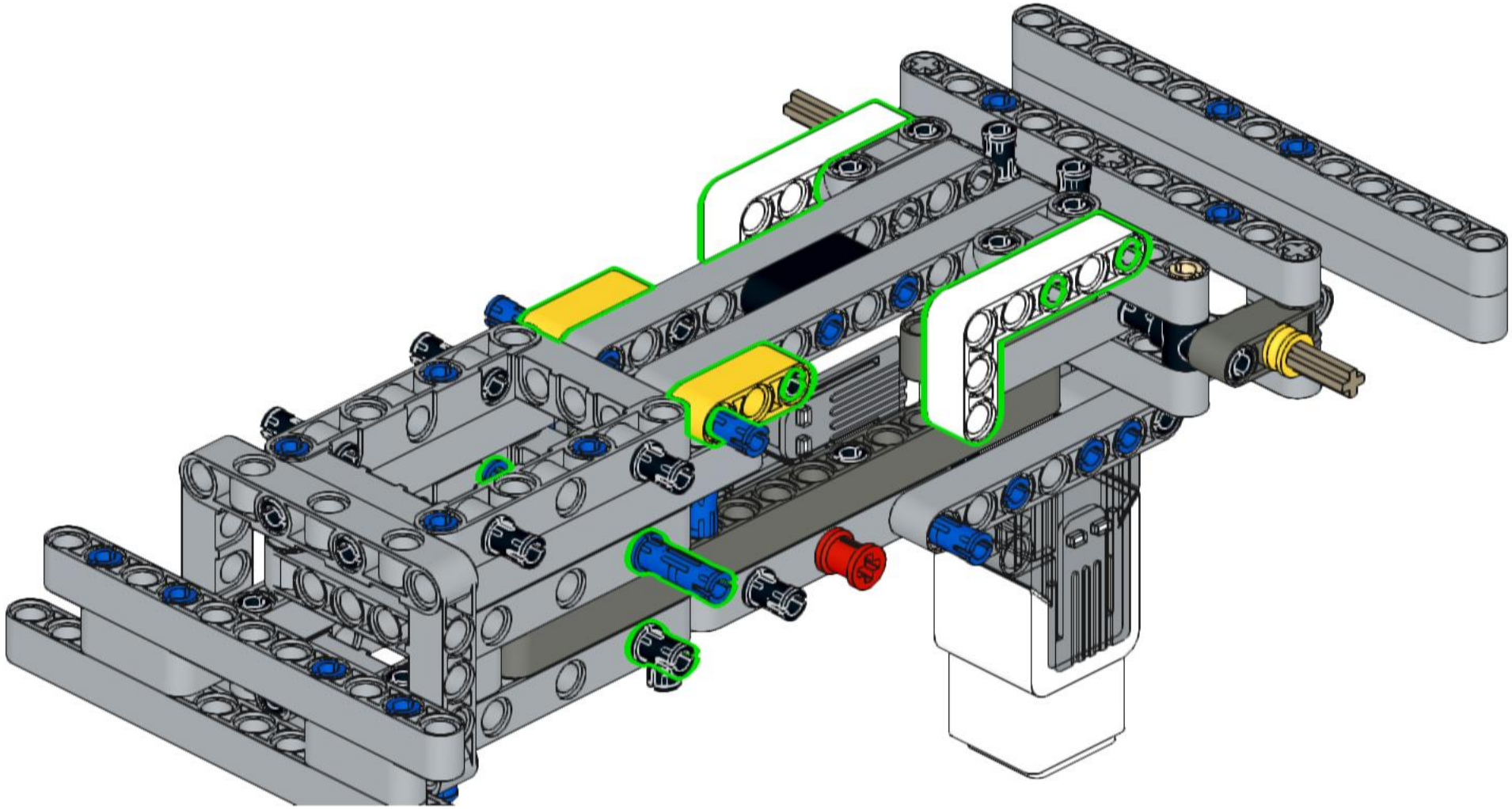

34

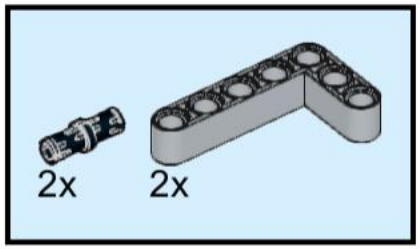

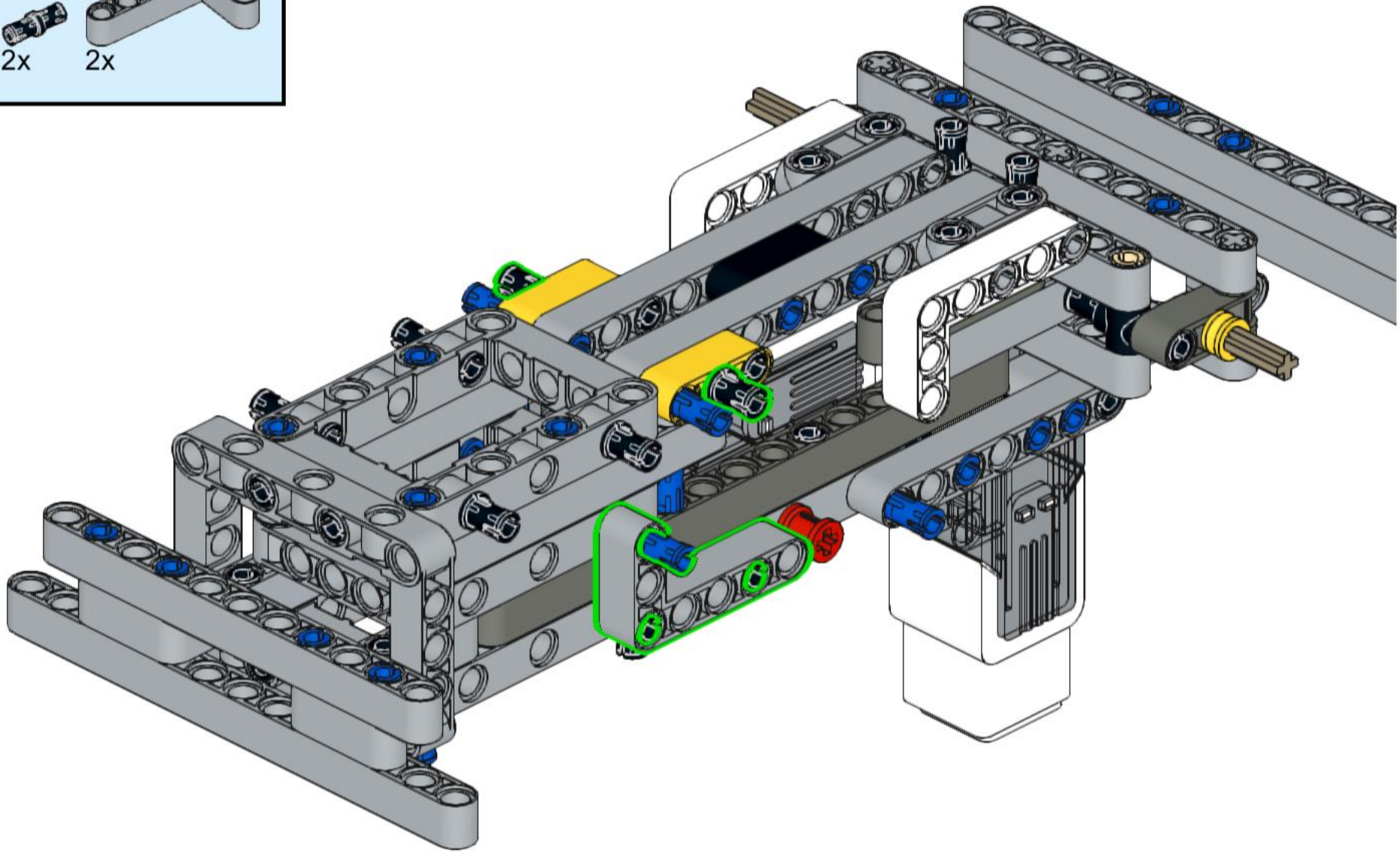

35

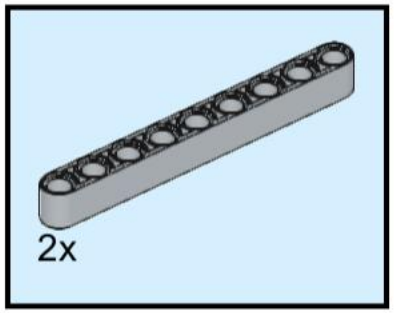

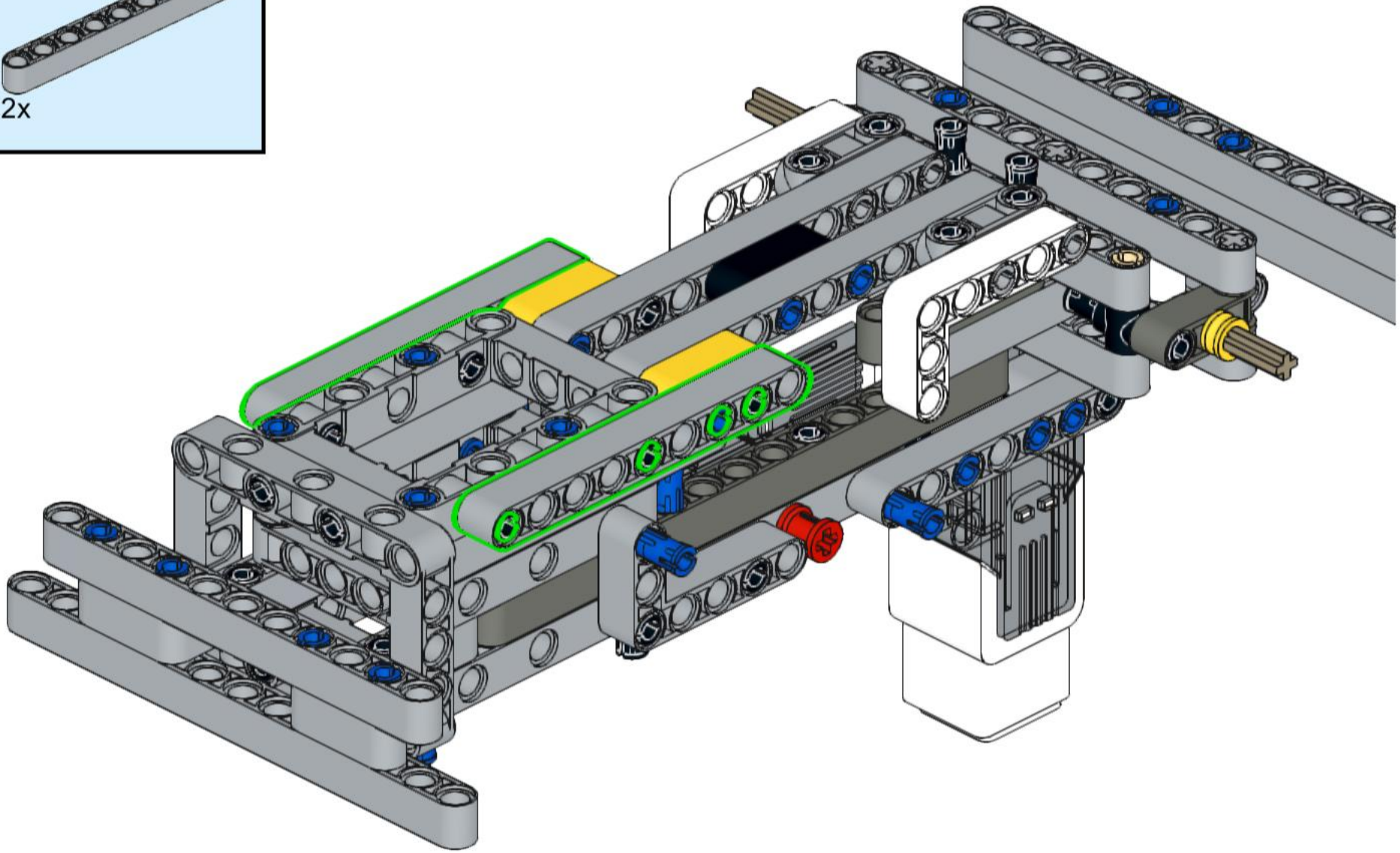

36

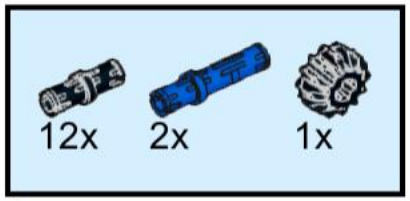

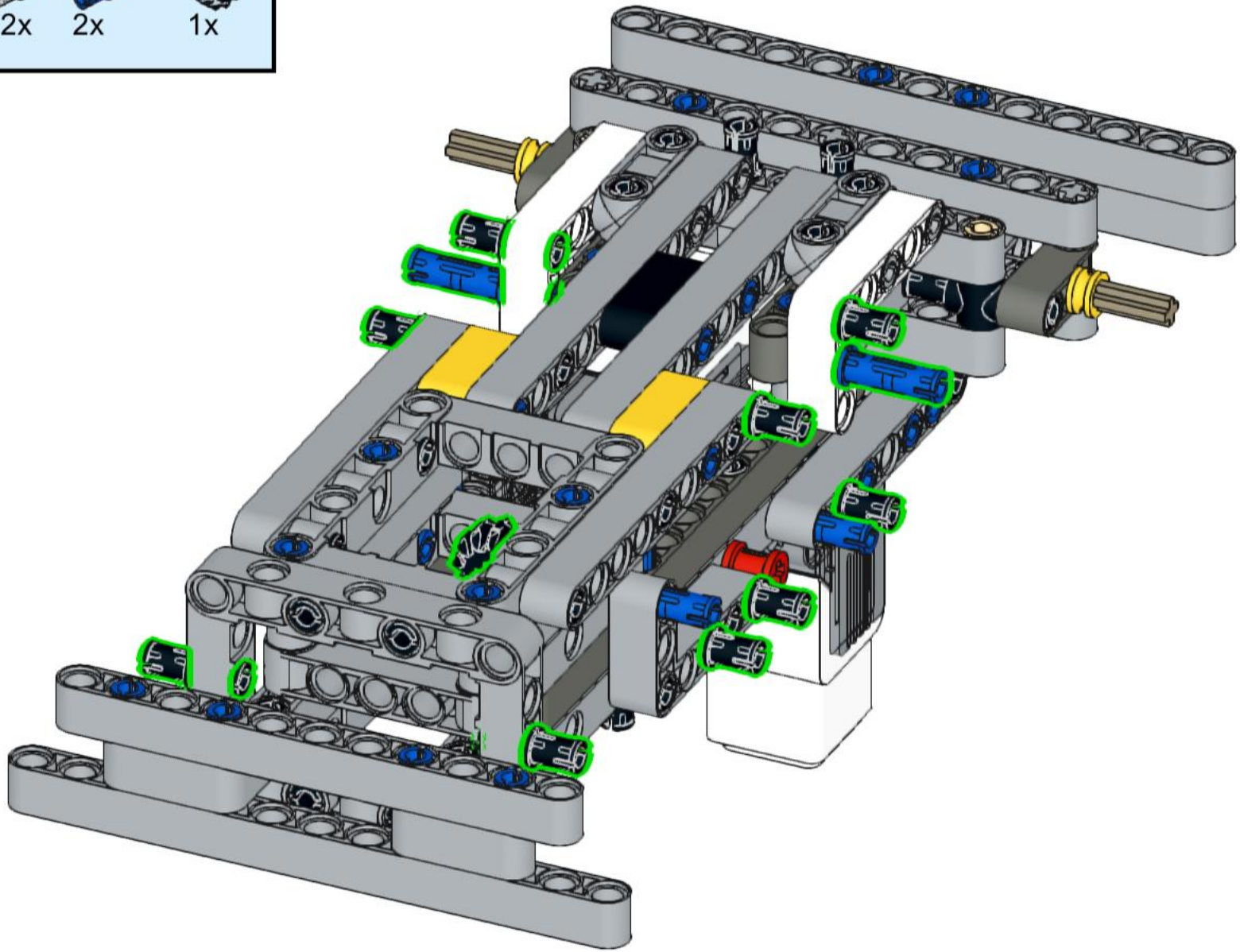

37

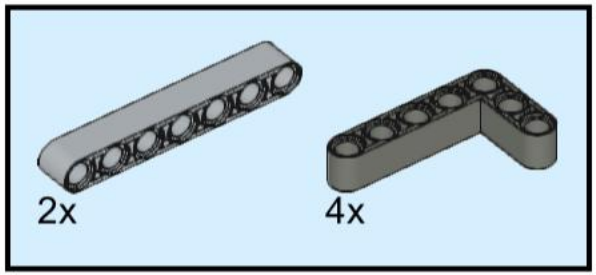

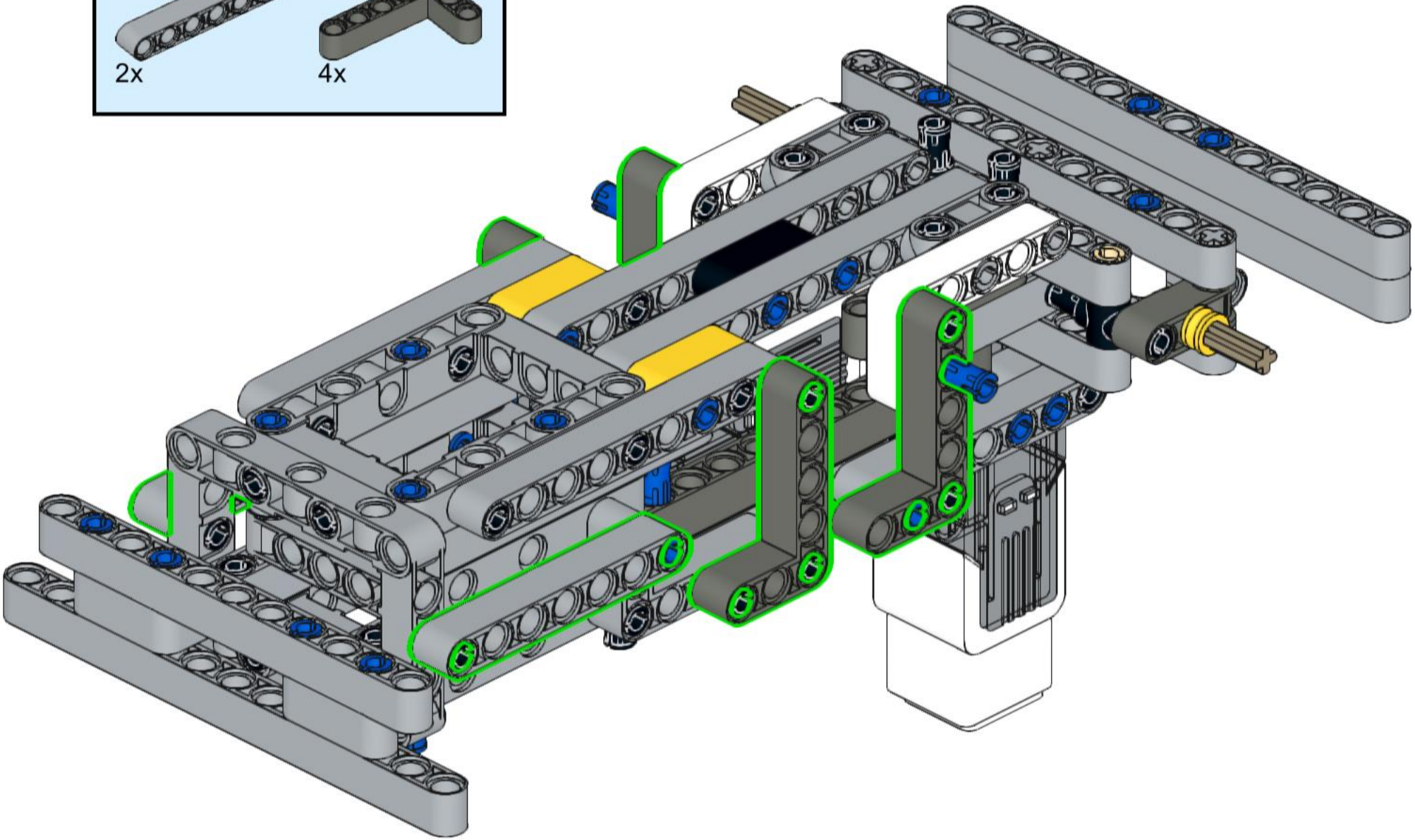

38

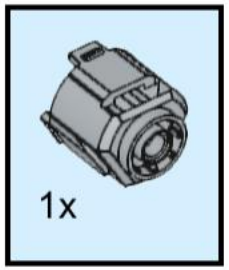

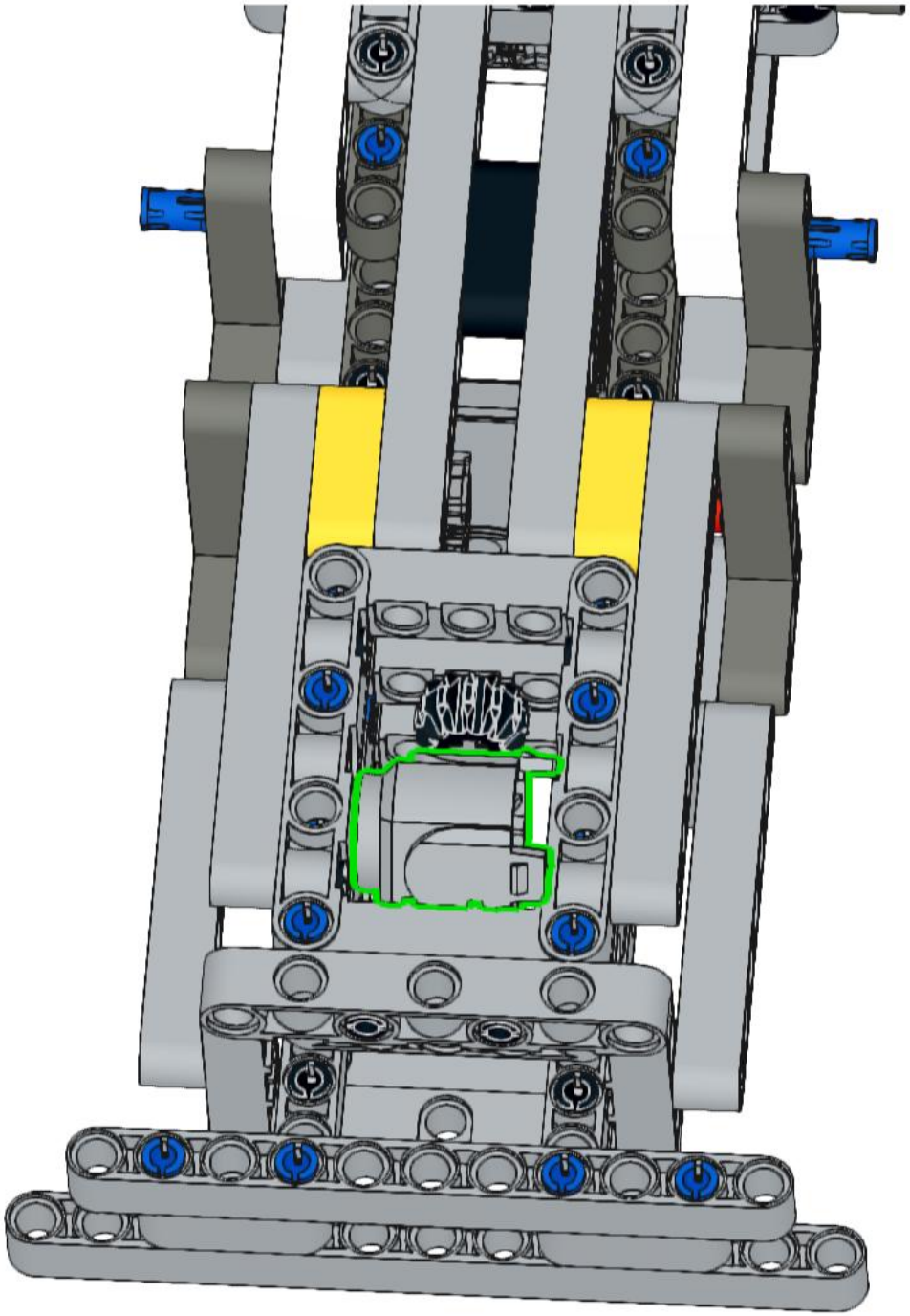

39

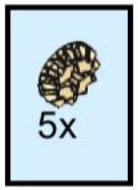

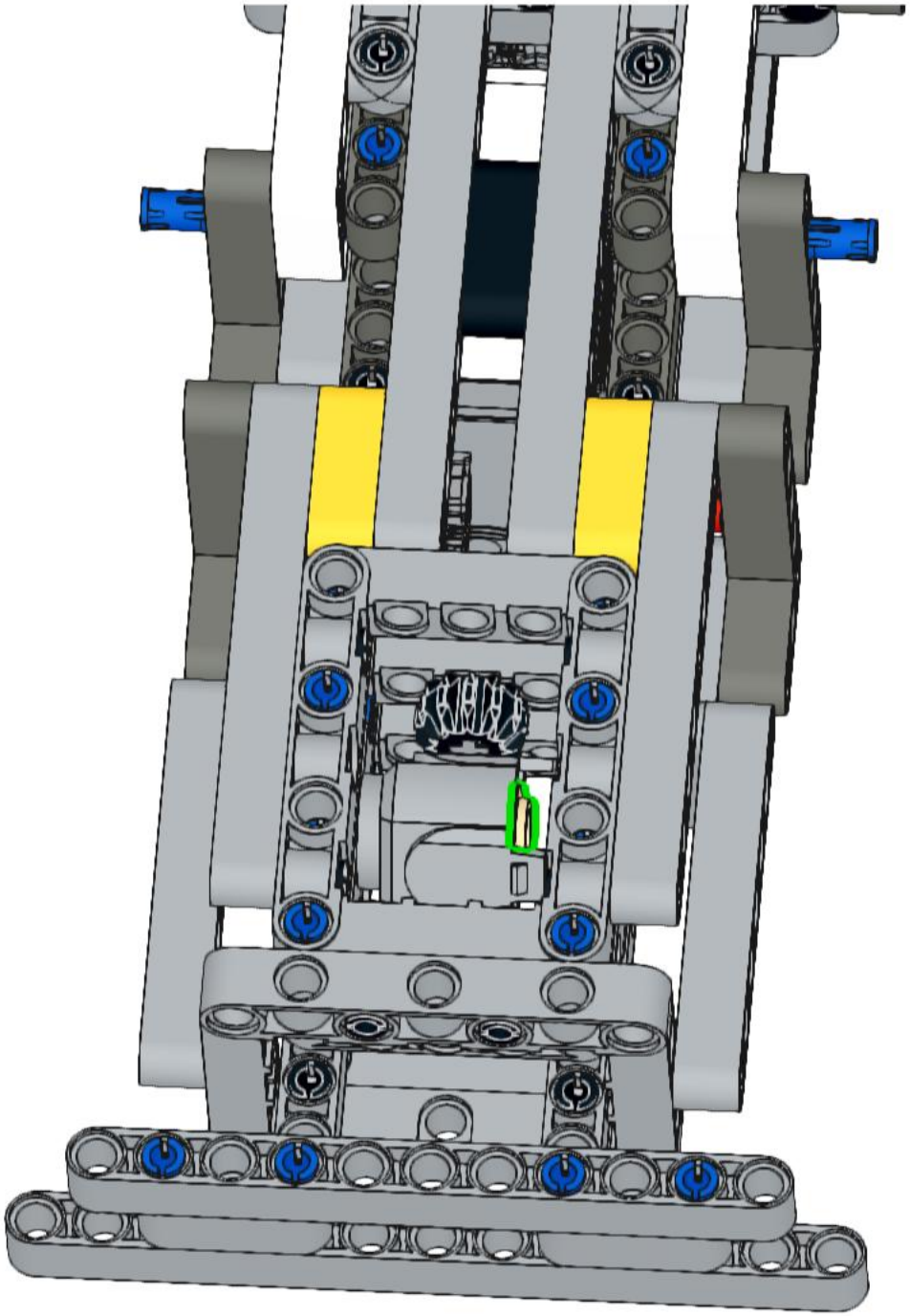

40

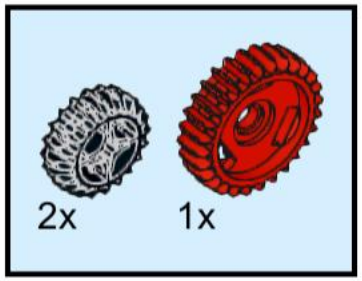

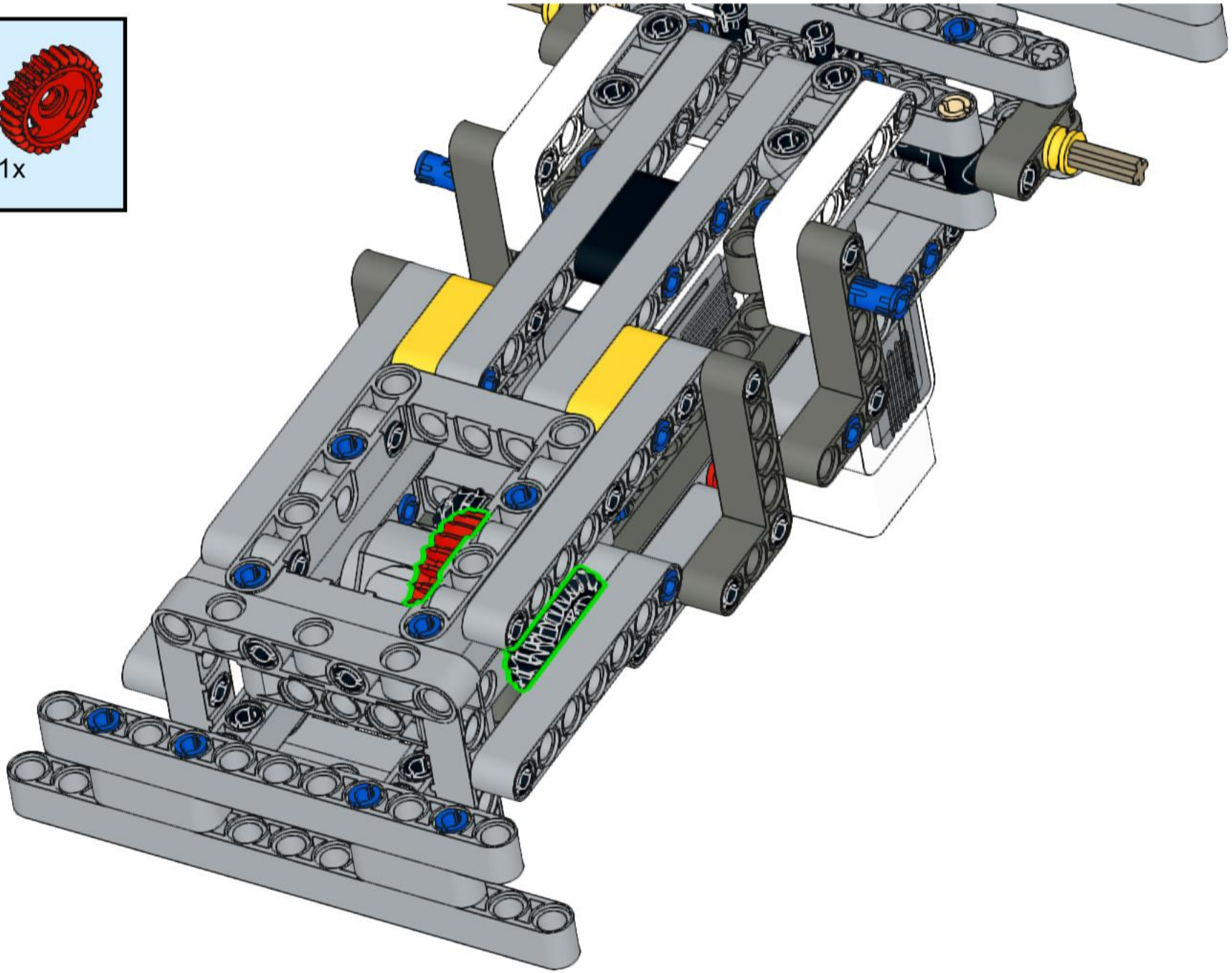

41

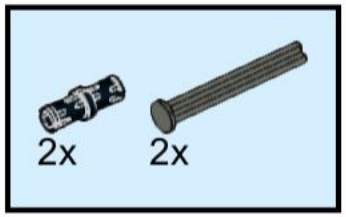

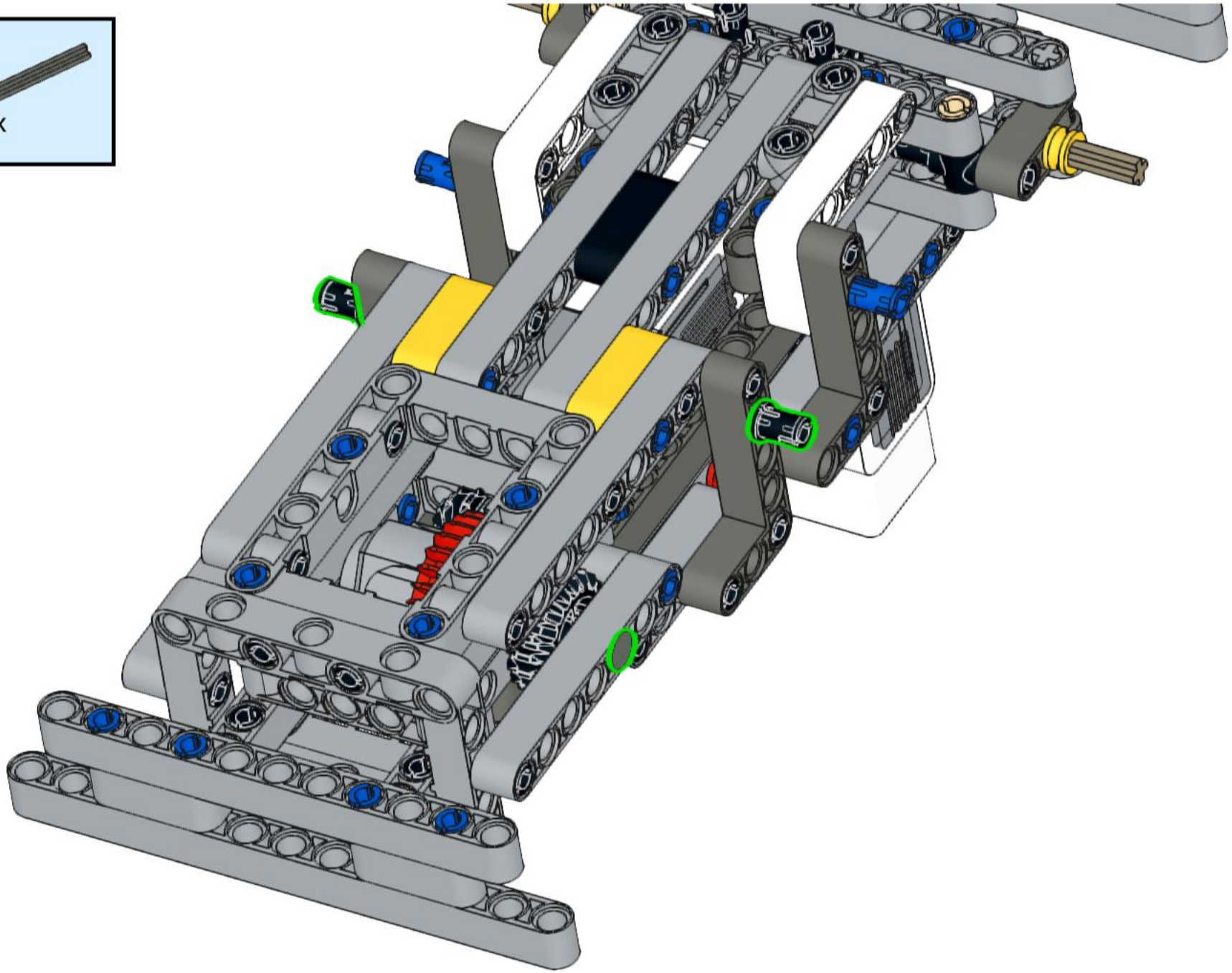

42

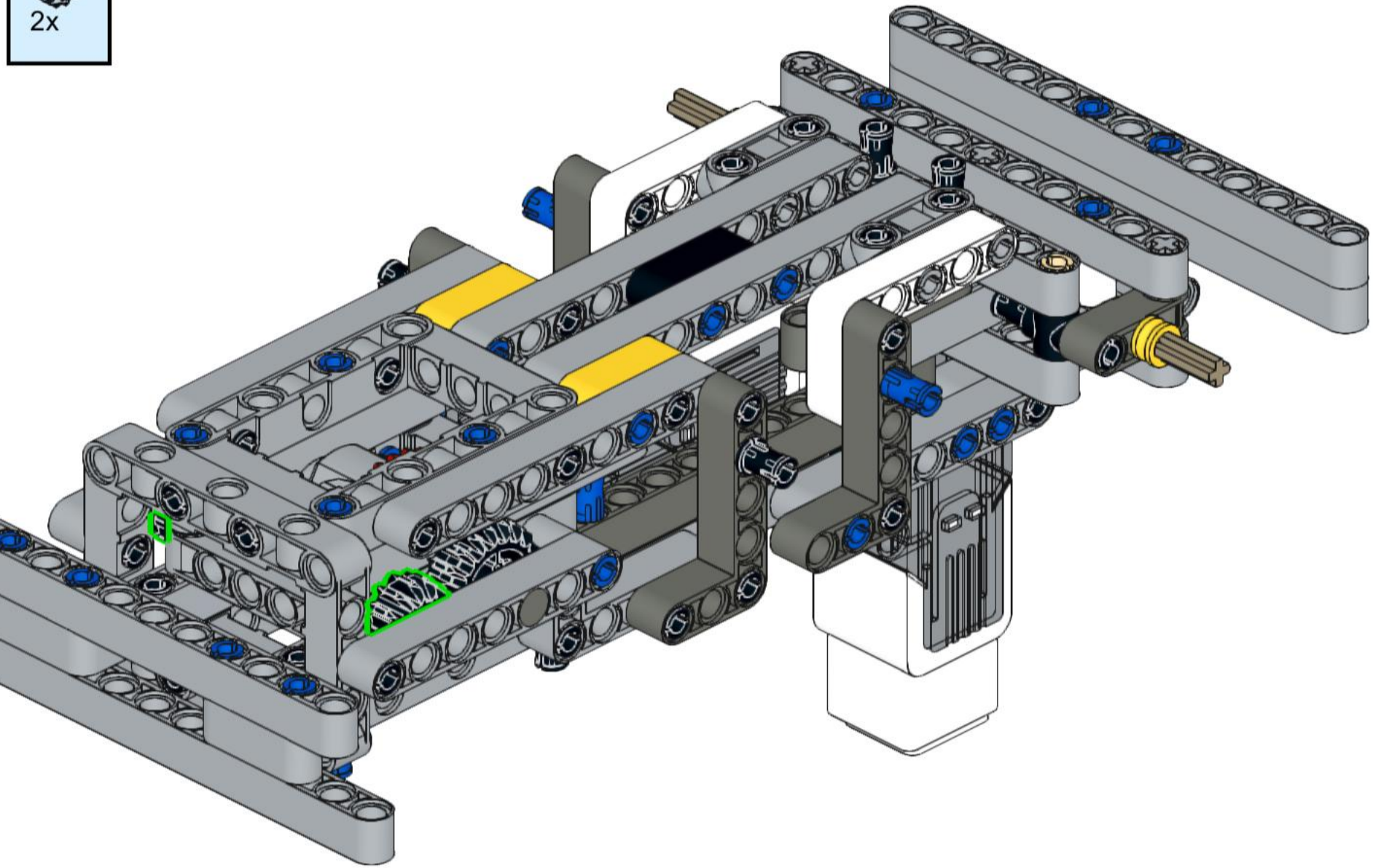

43

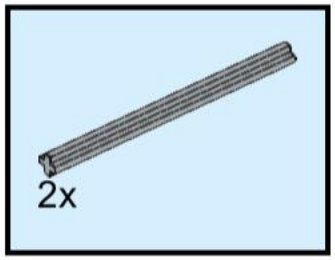

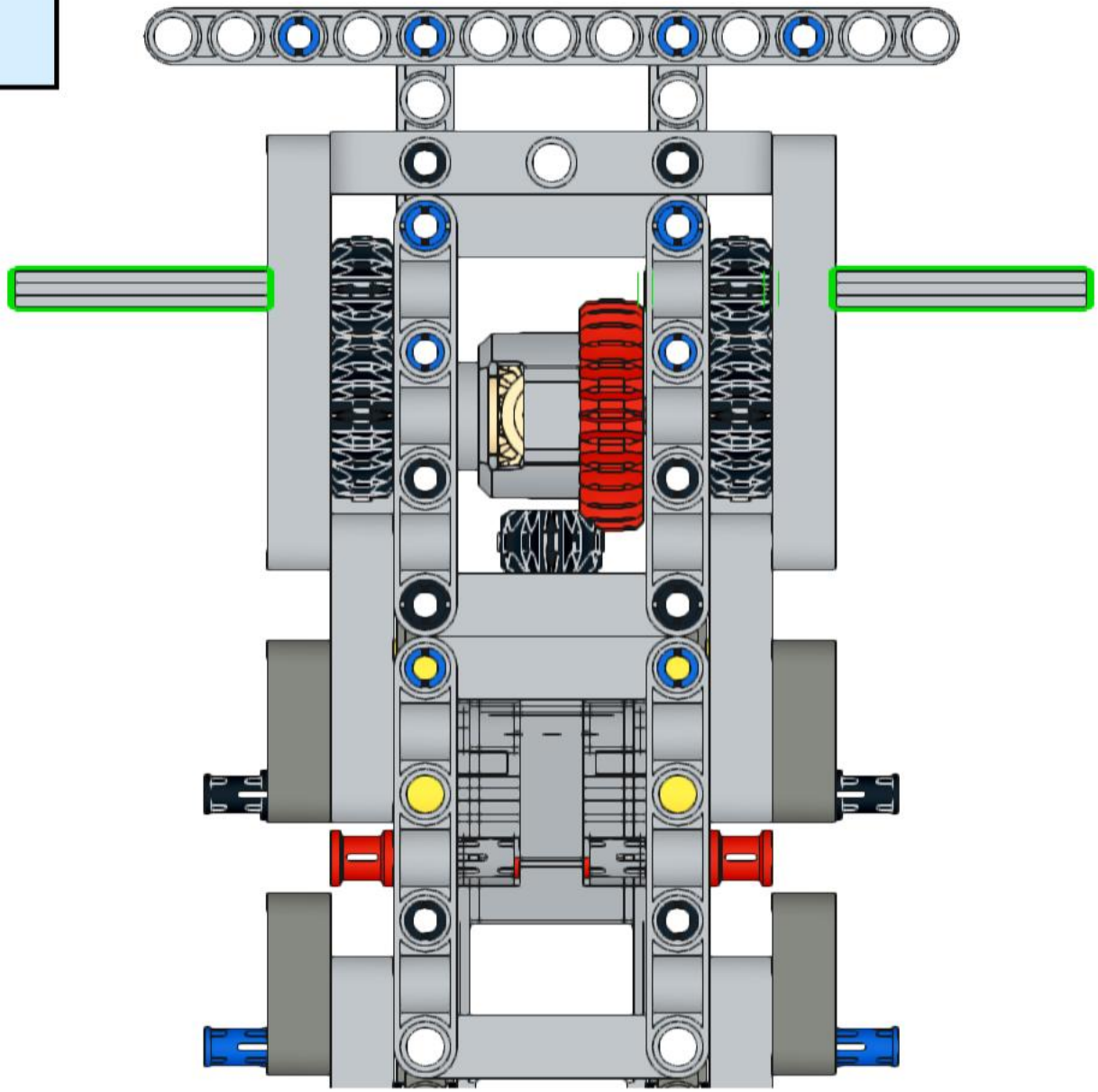

44

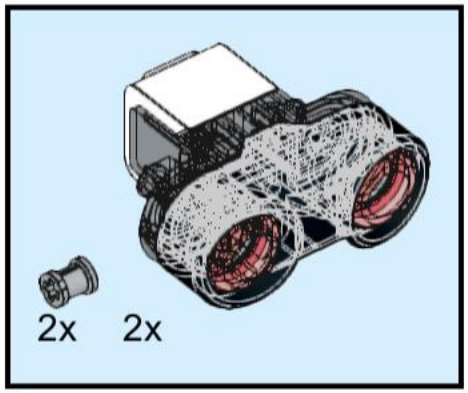

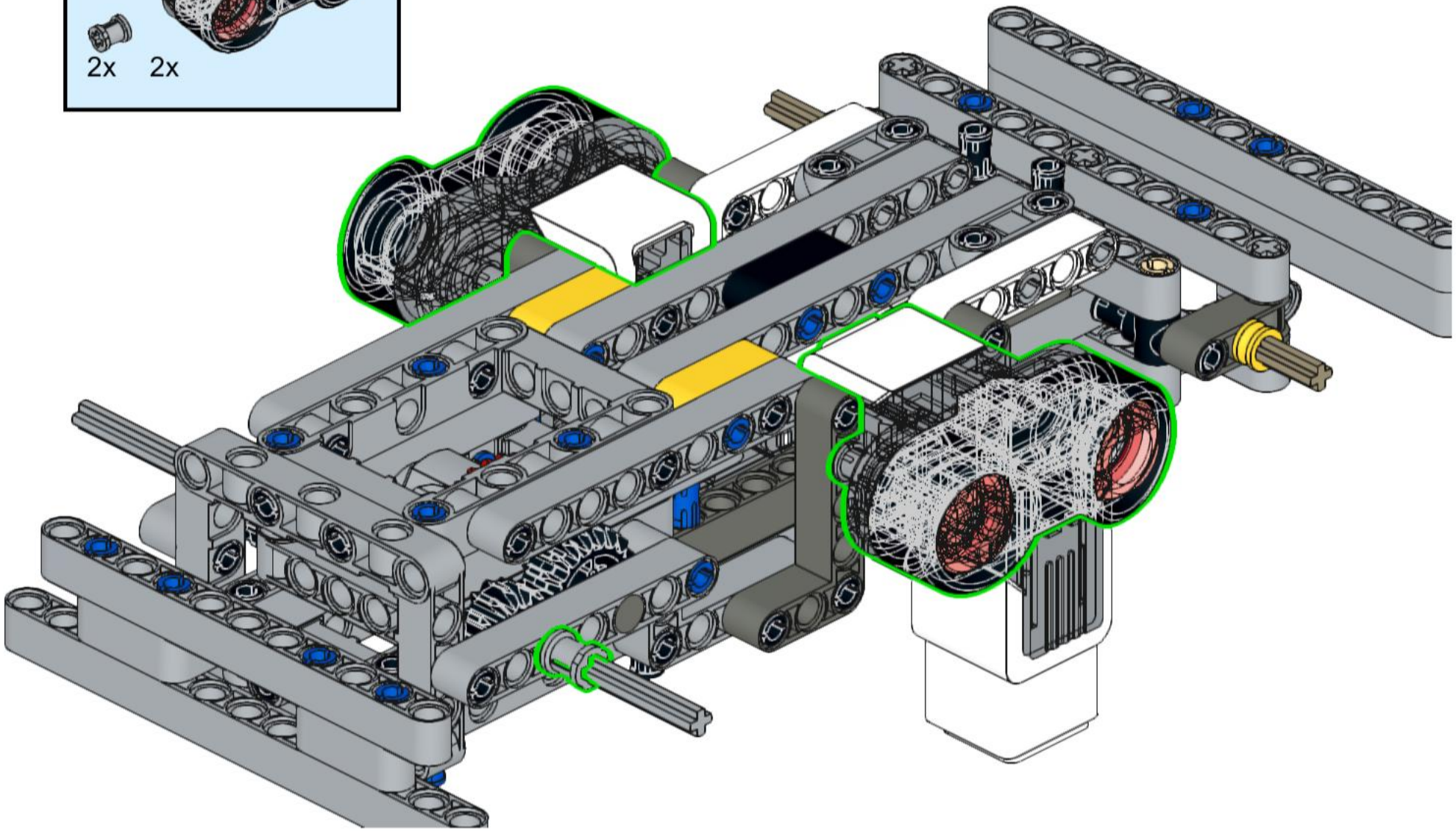

45

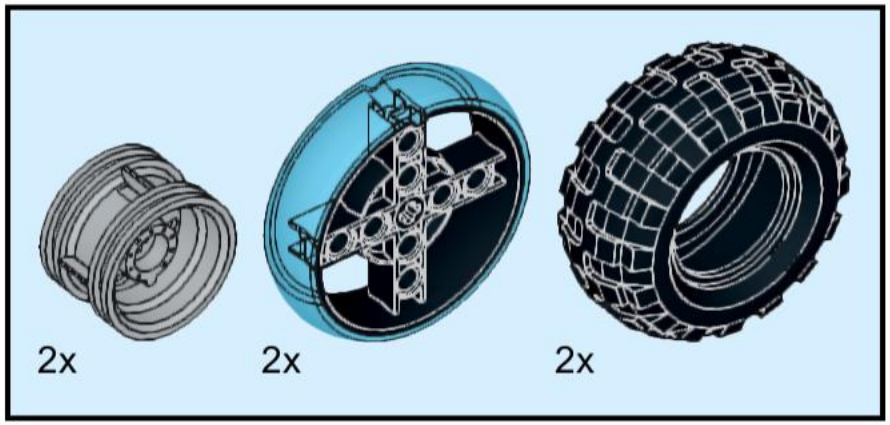

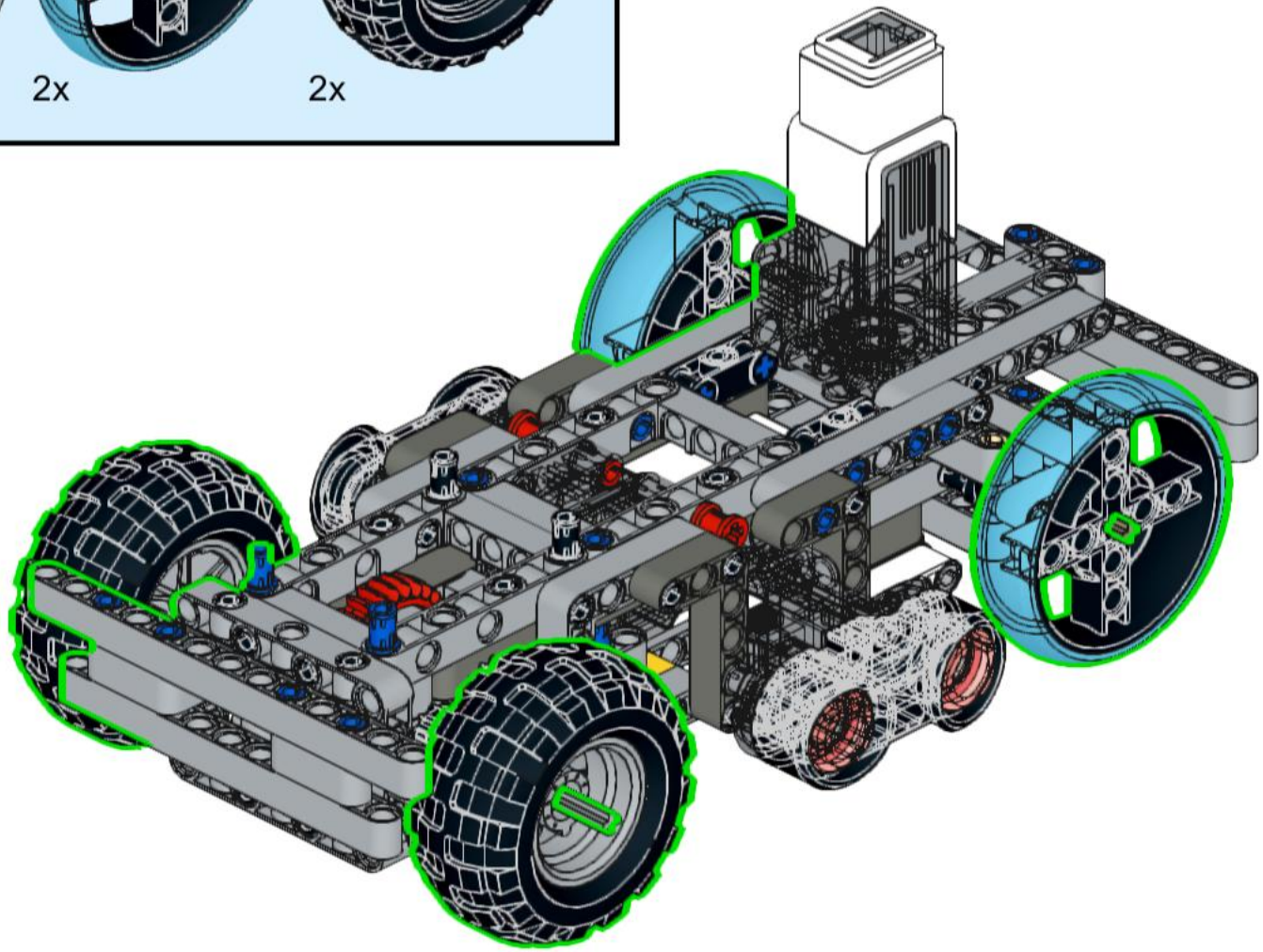

46

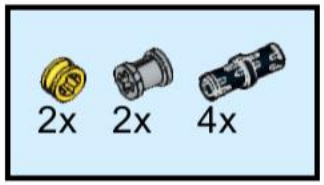

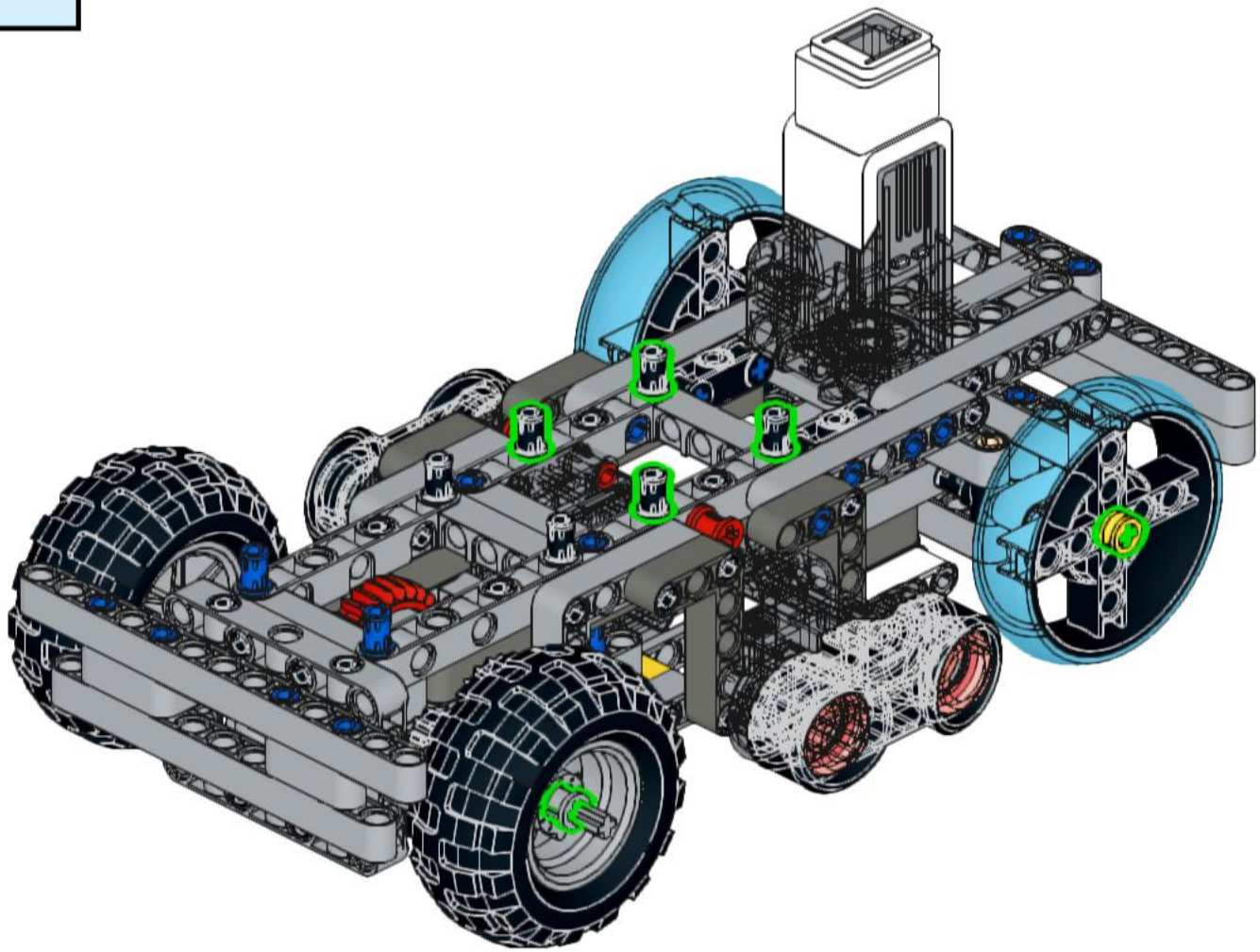

47

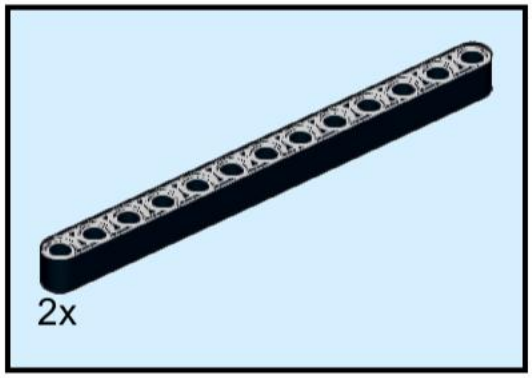

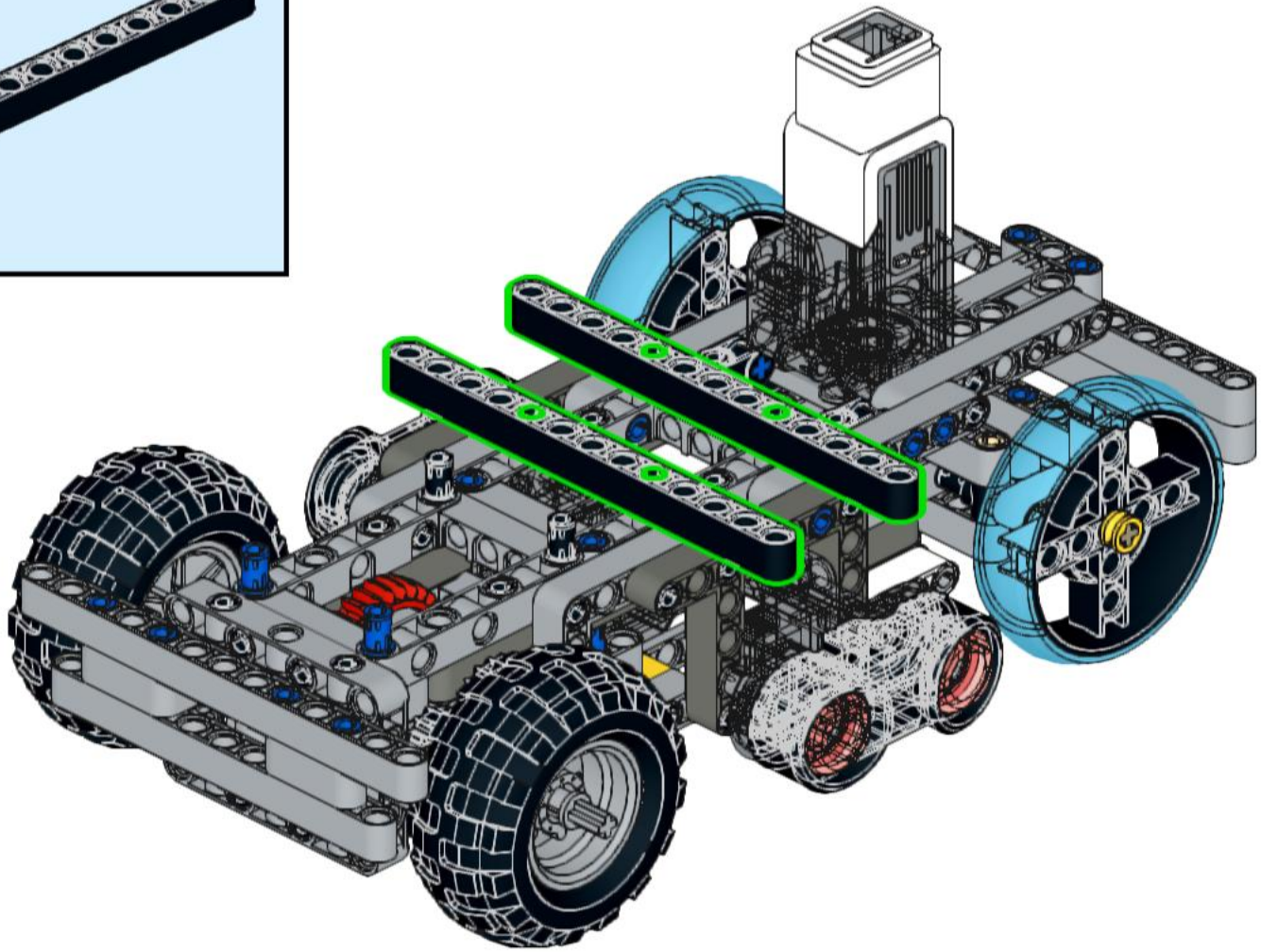

48

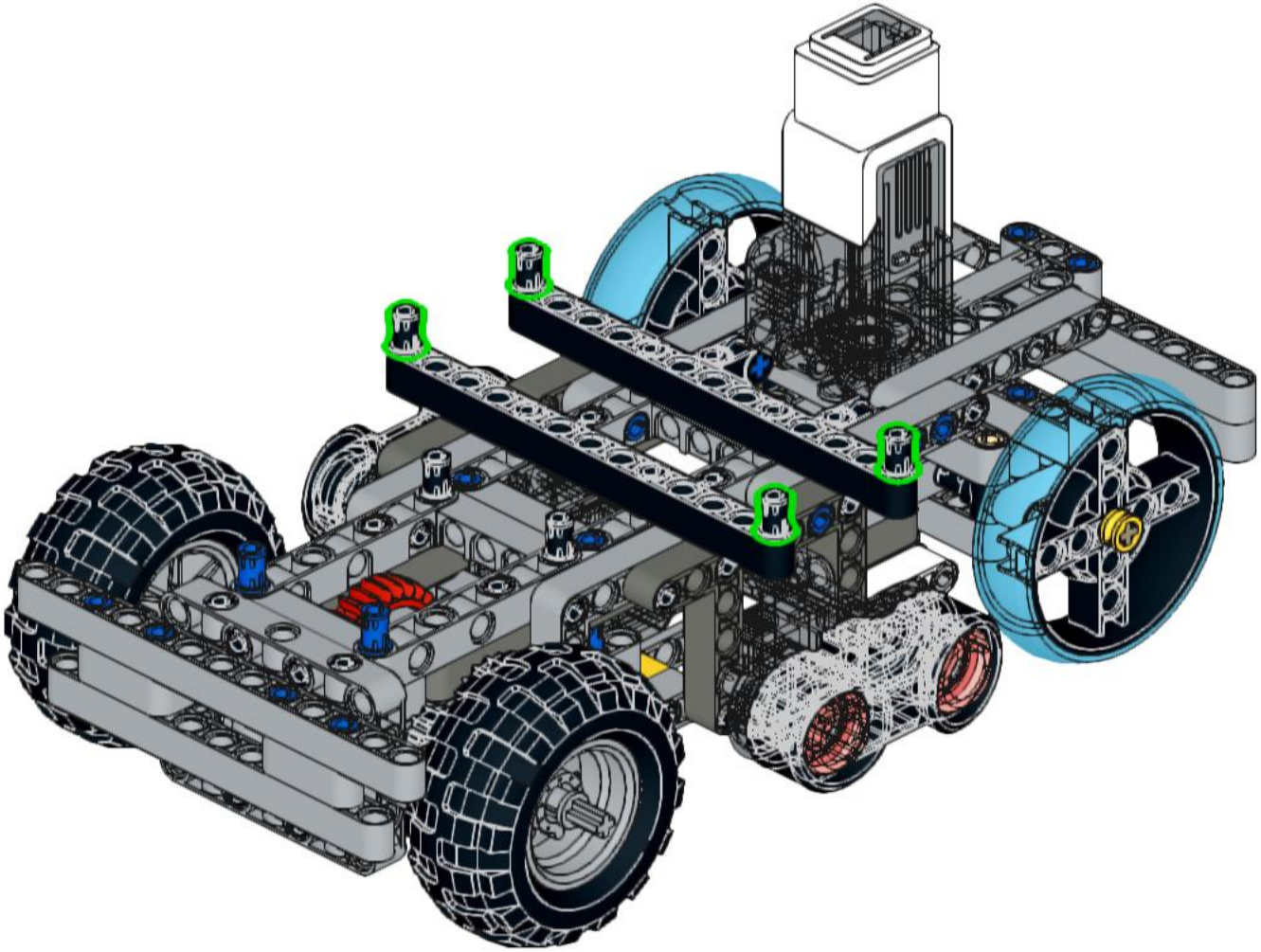

49

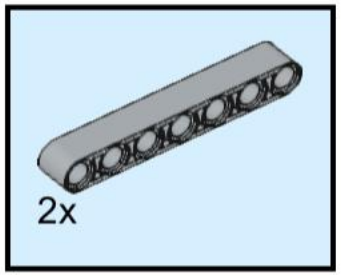

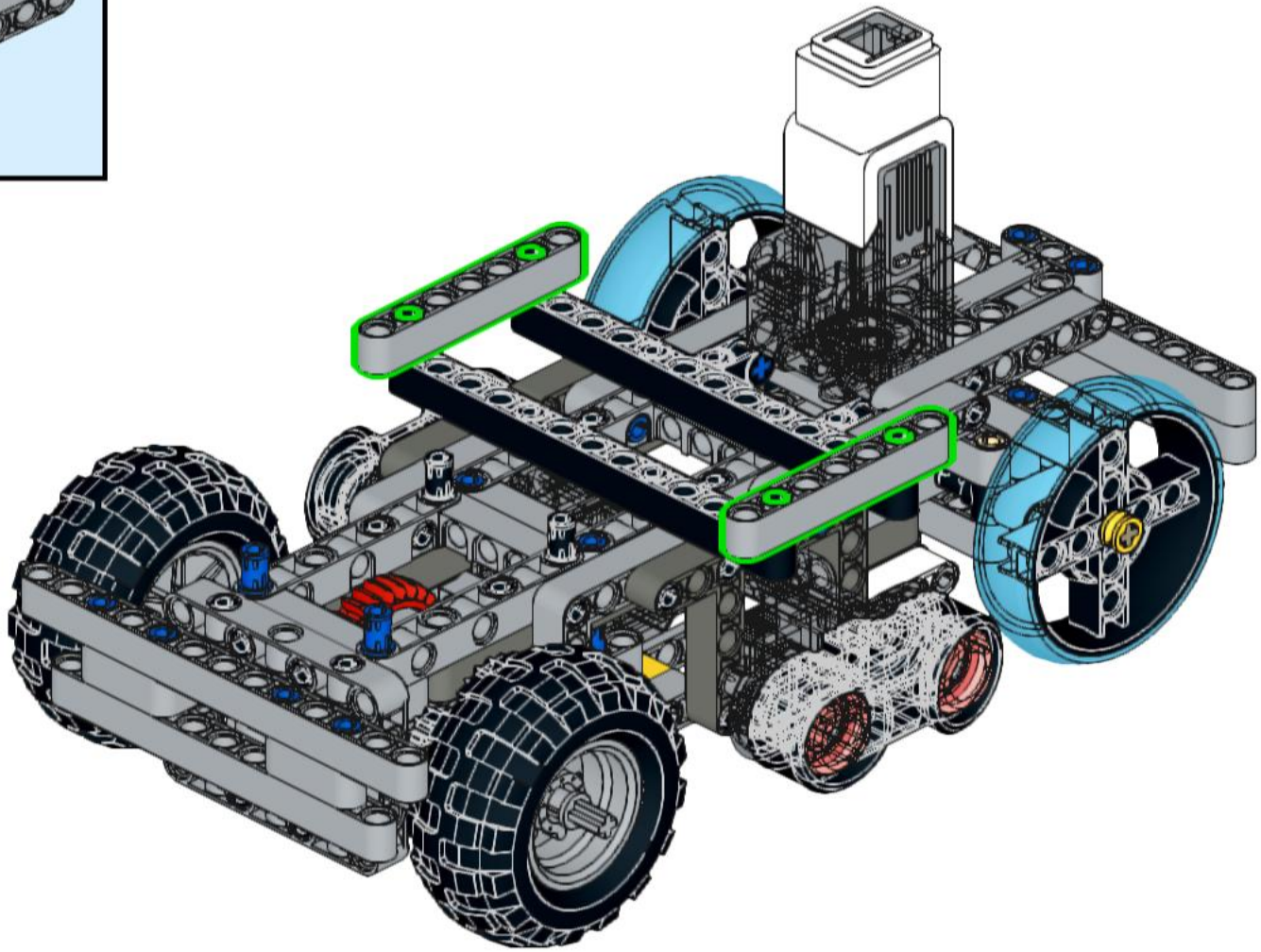

50

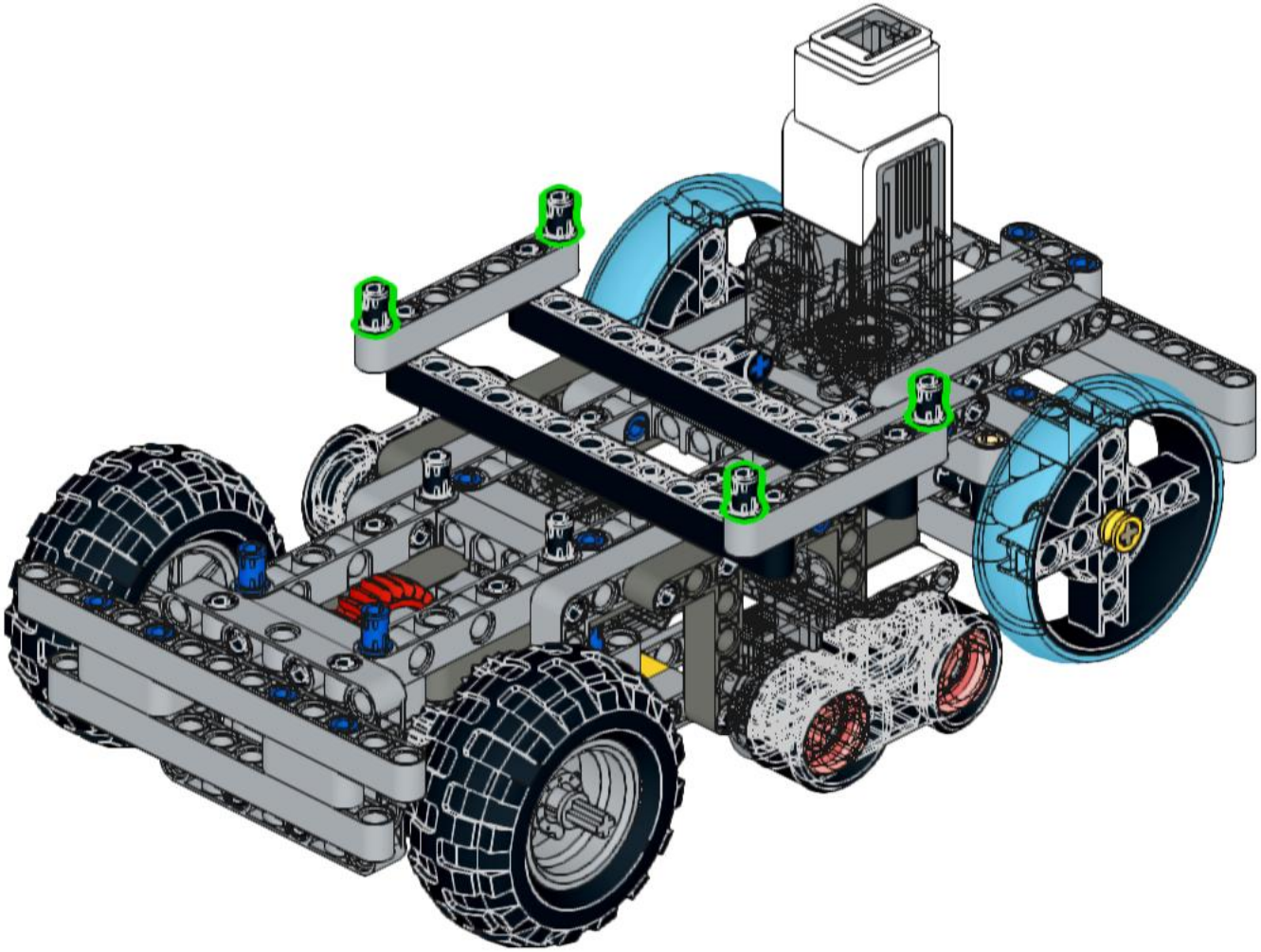

51

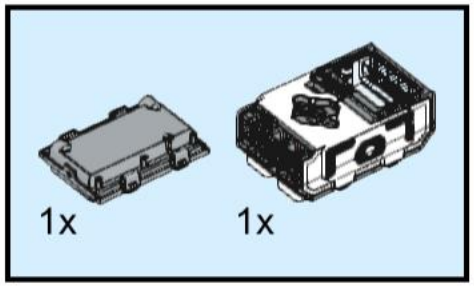

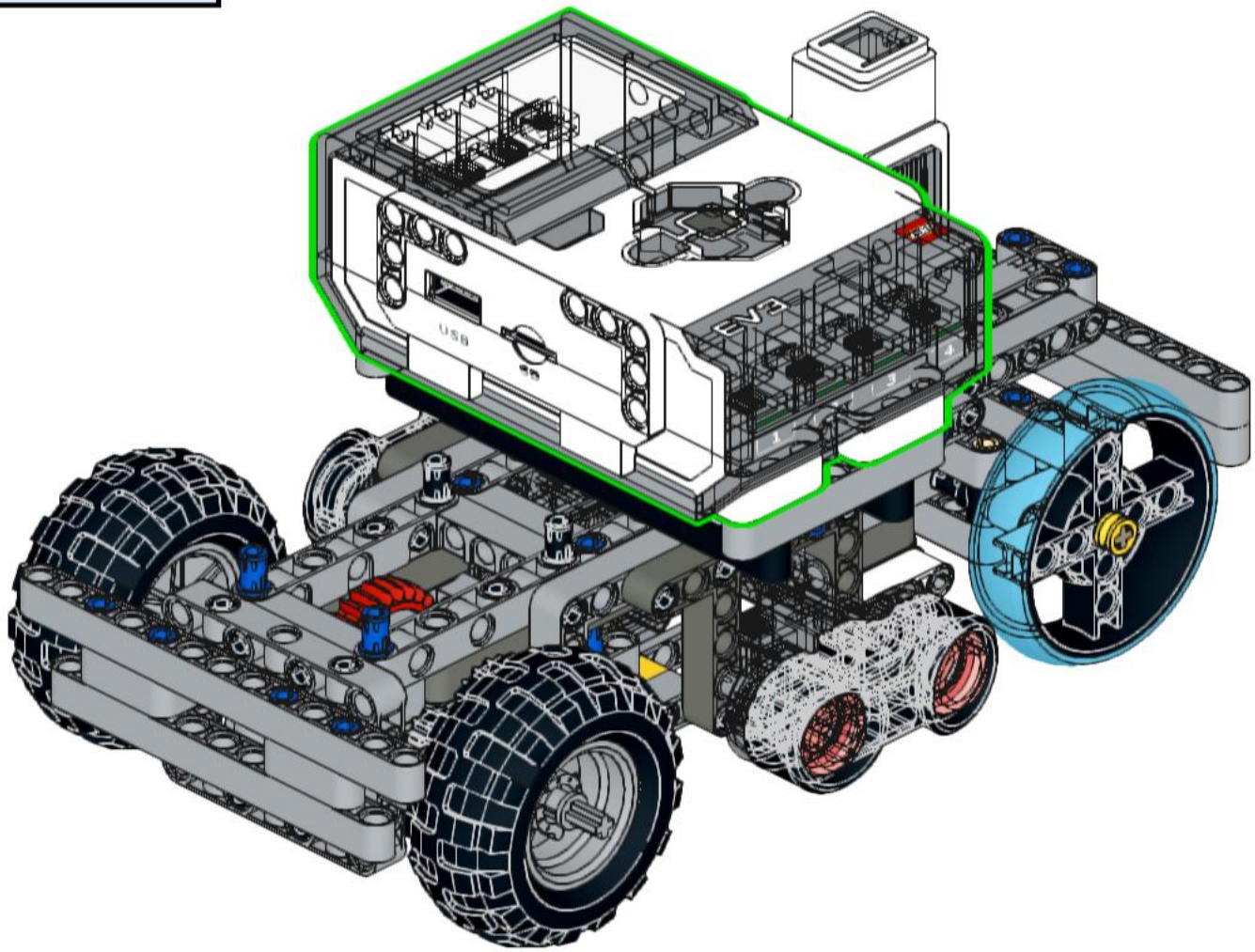

52

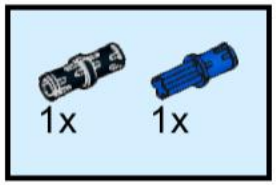

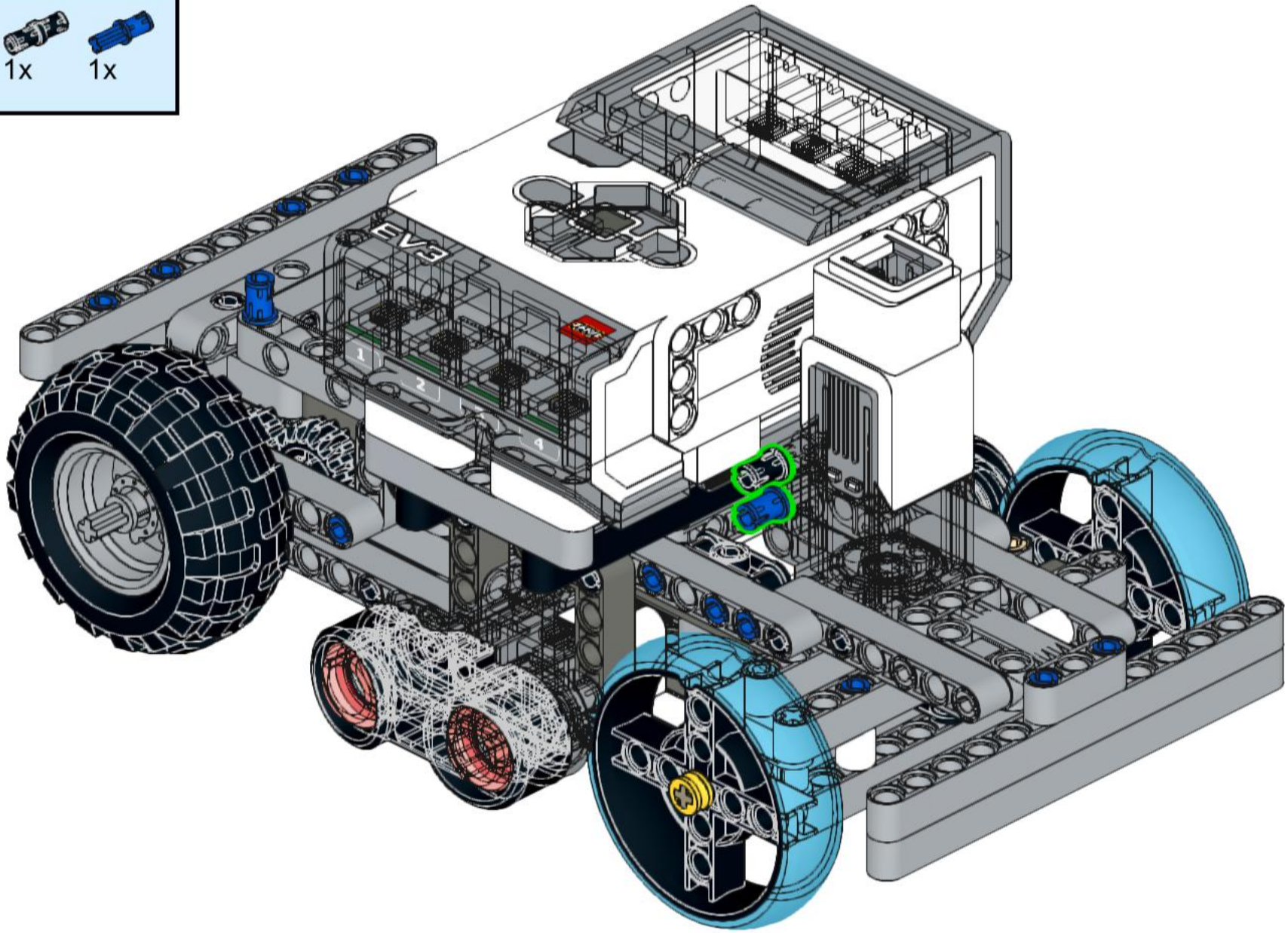

53

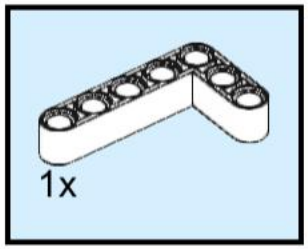

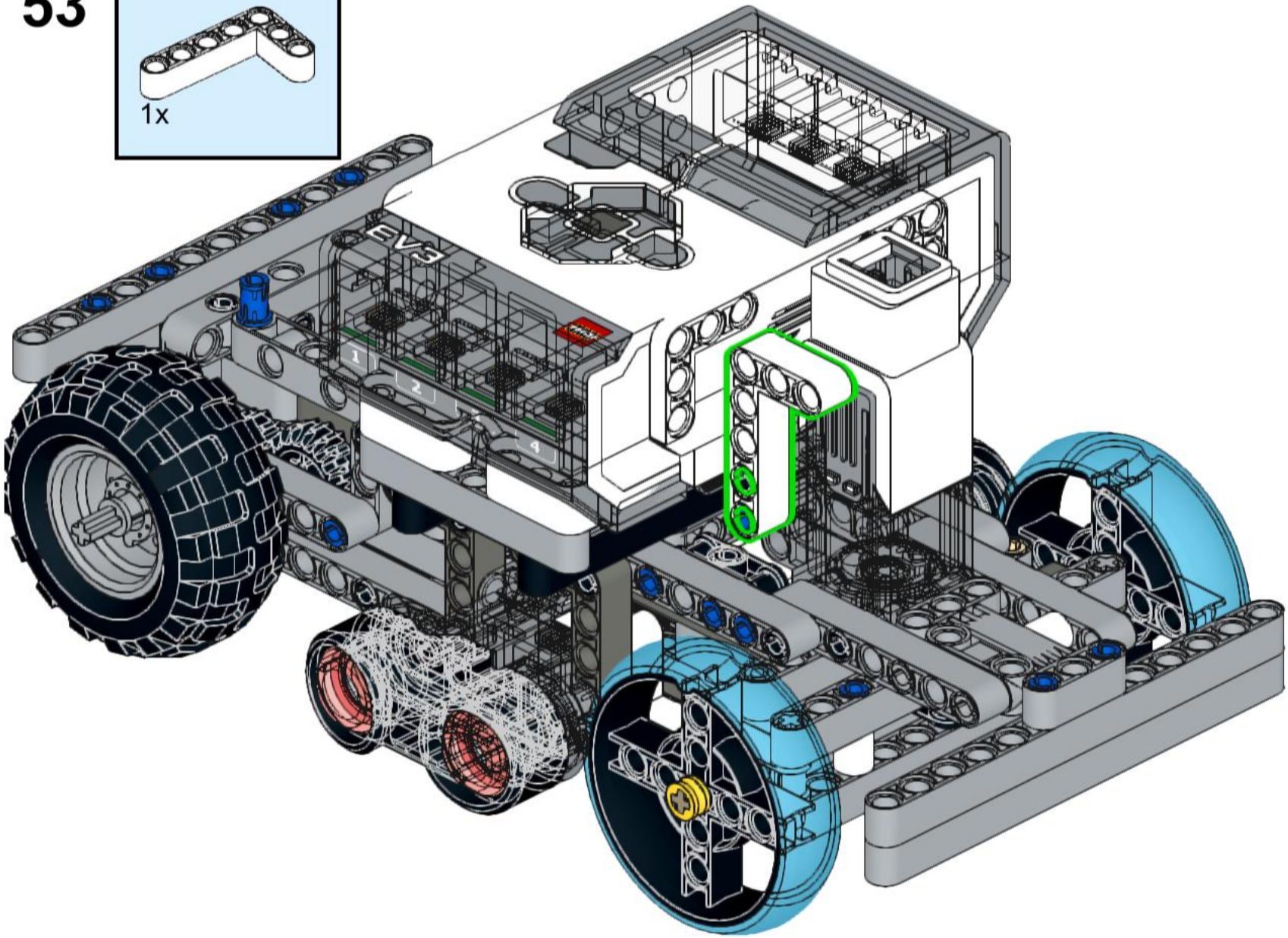

54

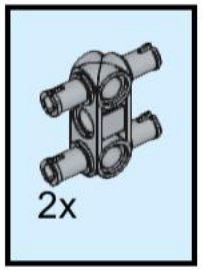

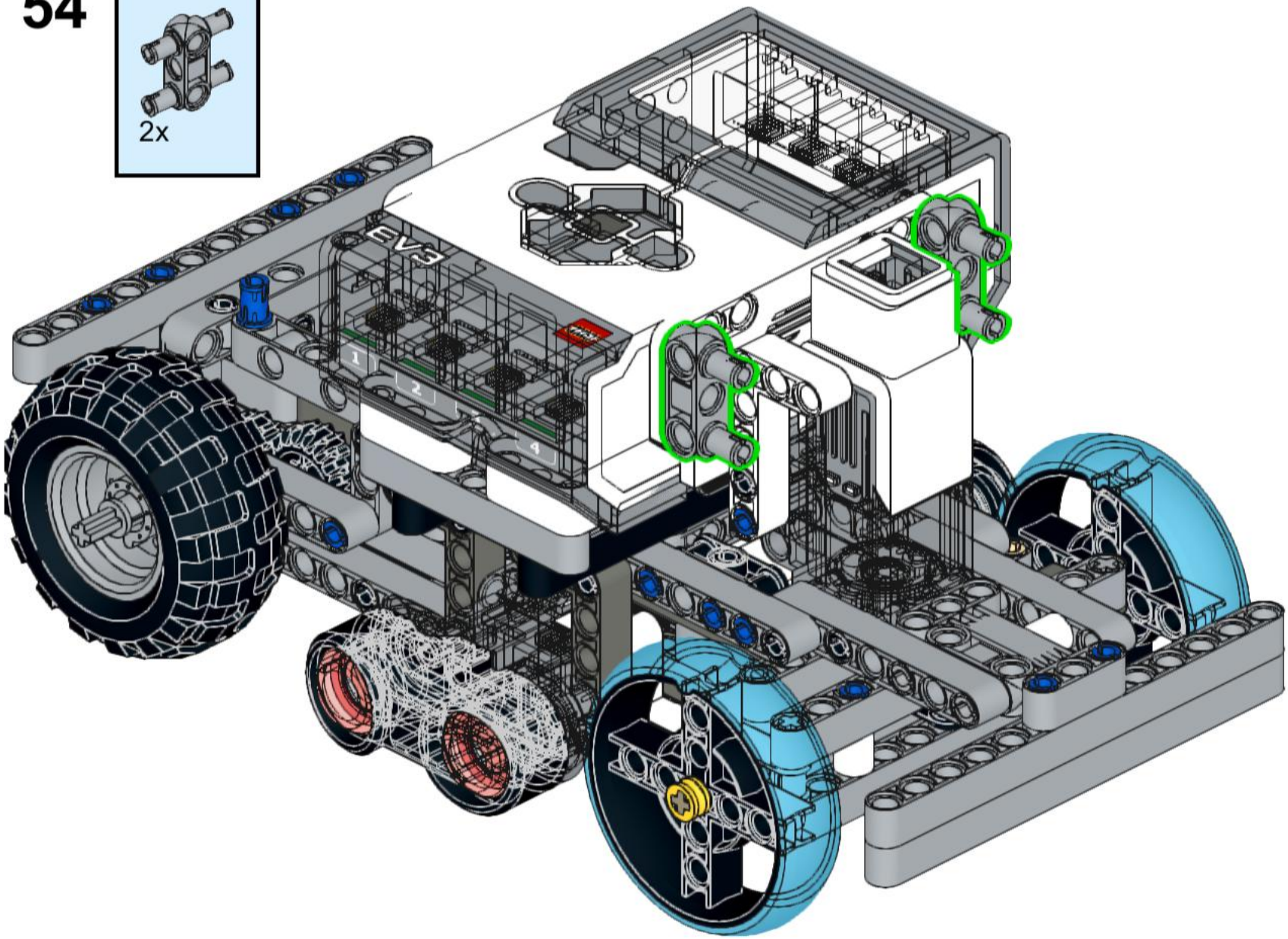

55

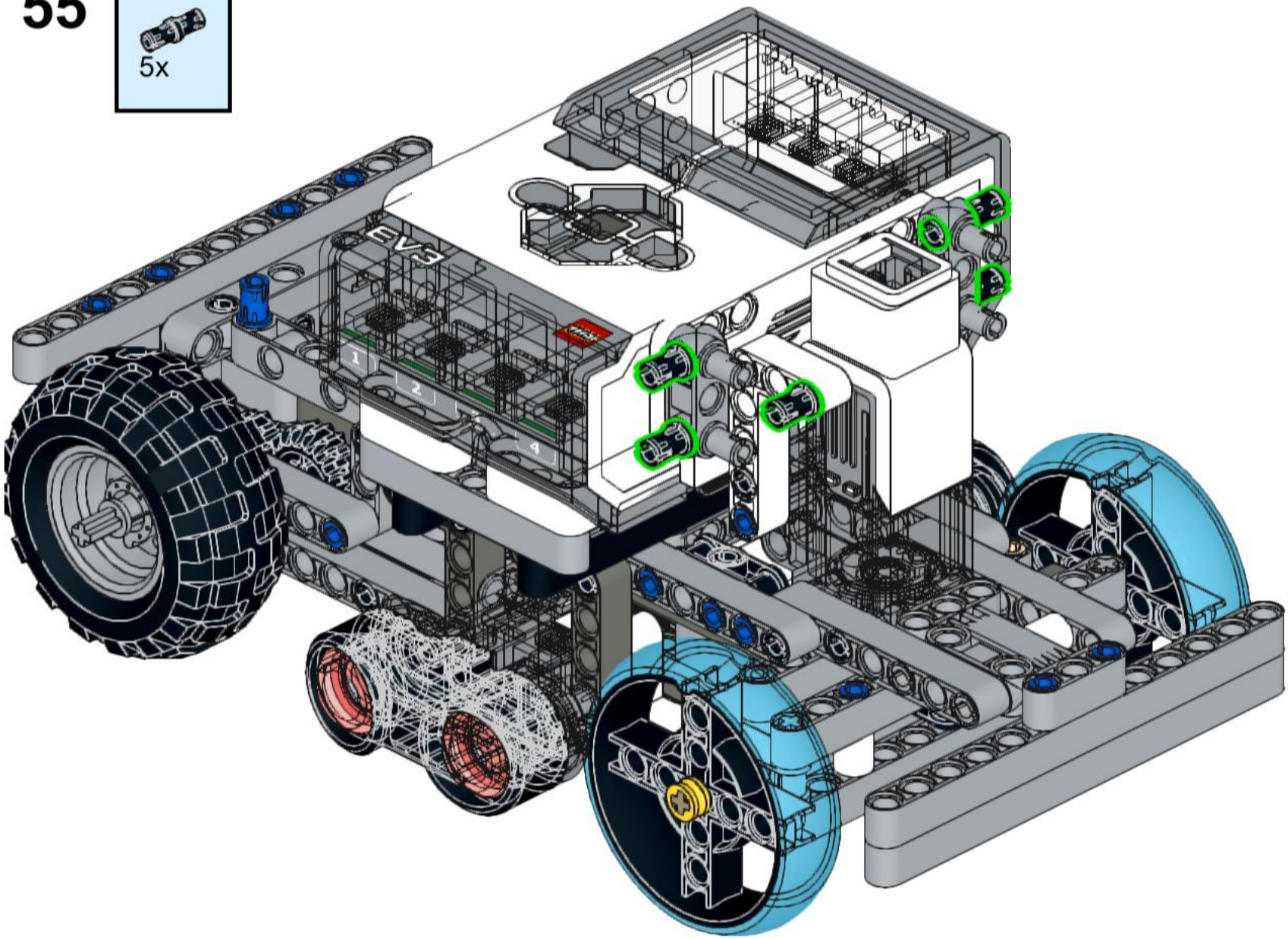

56

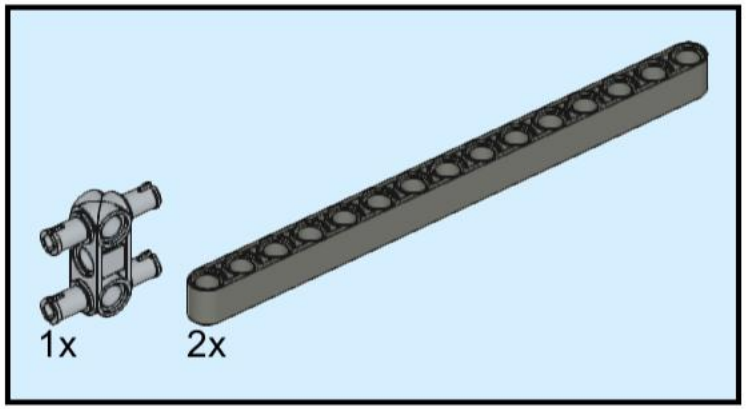

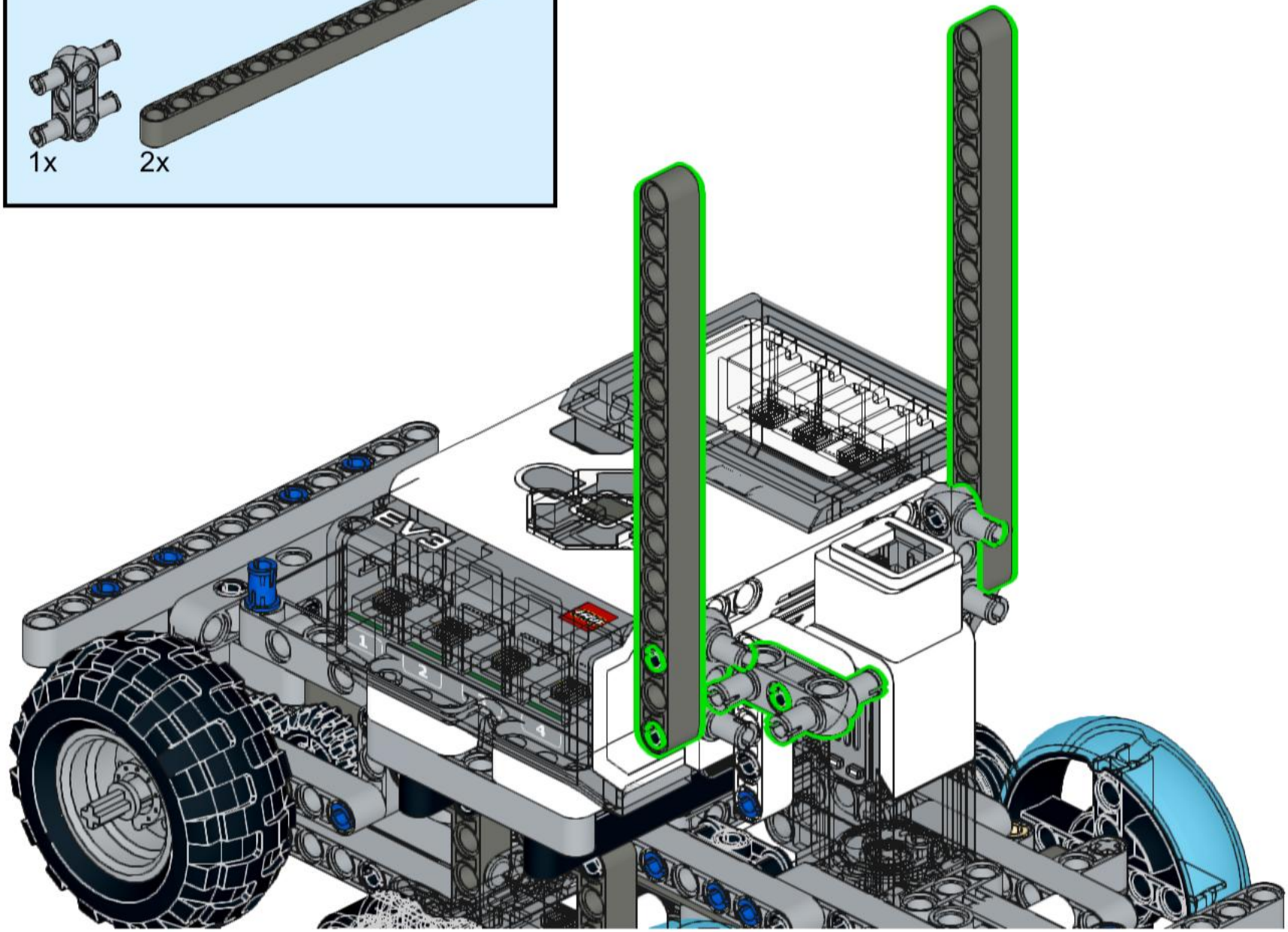

57

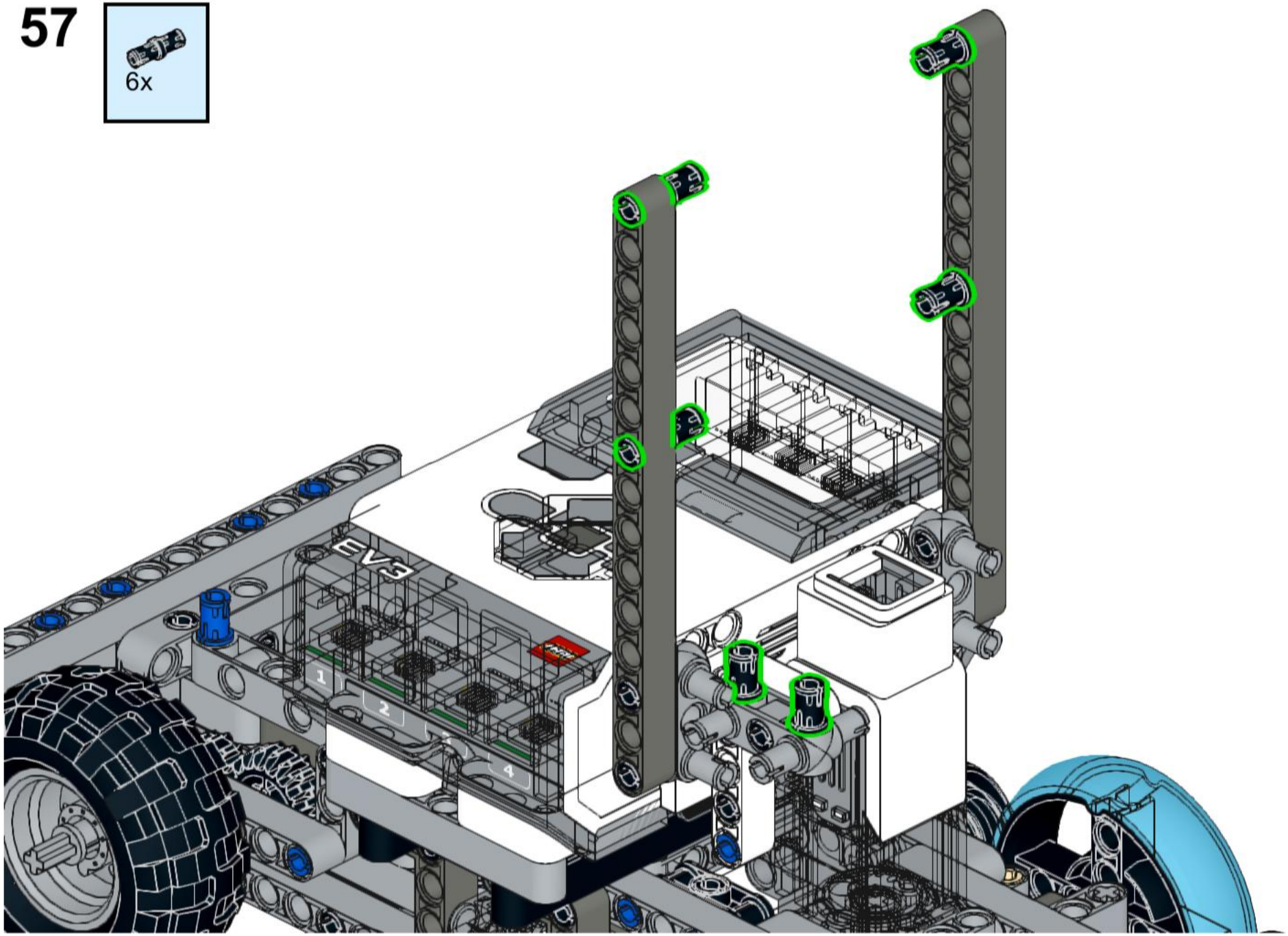

58

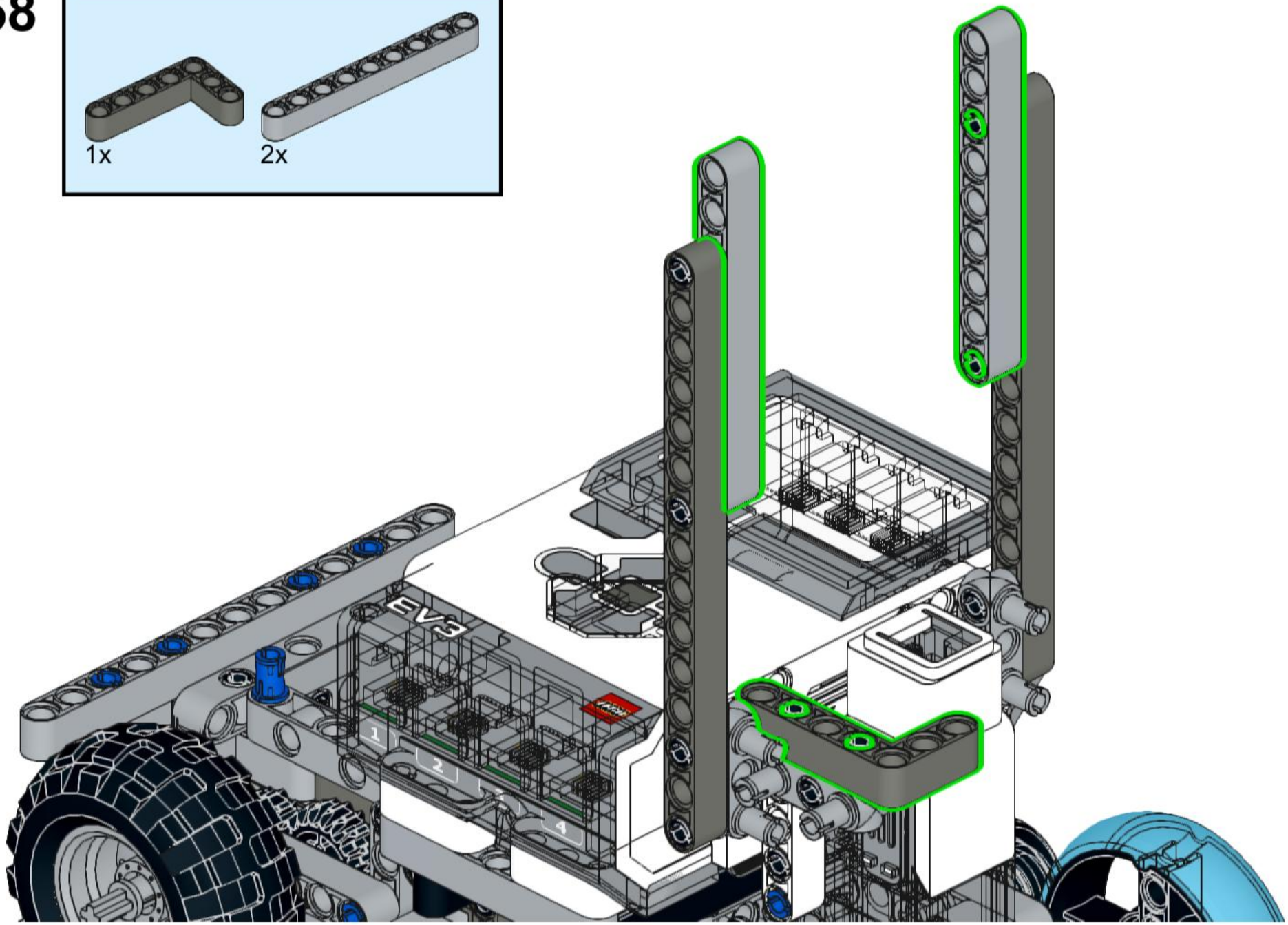

59

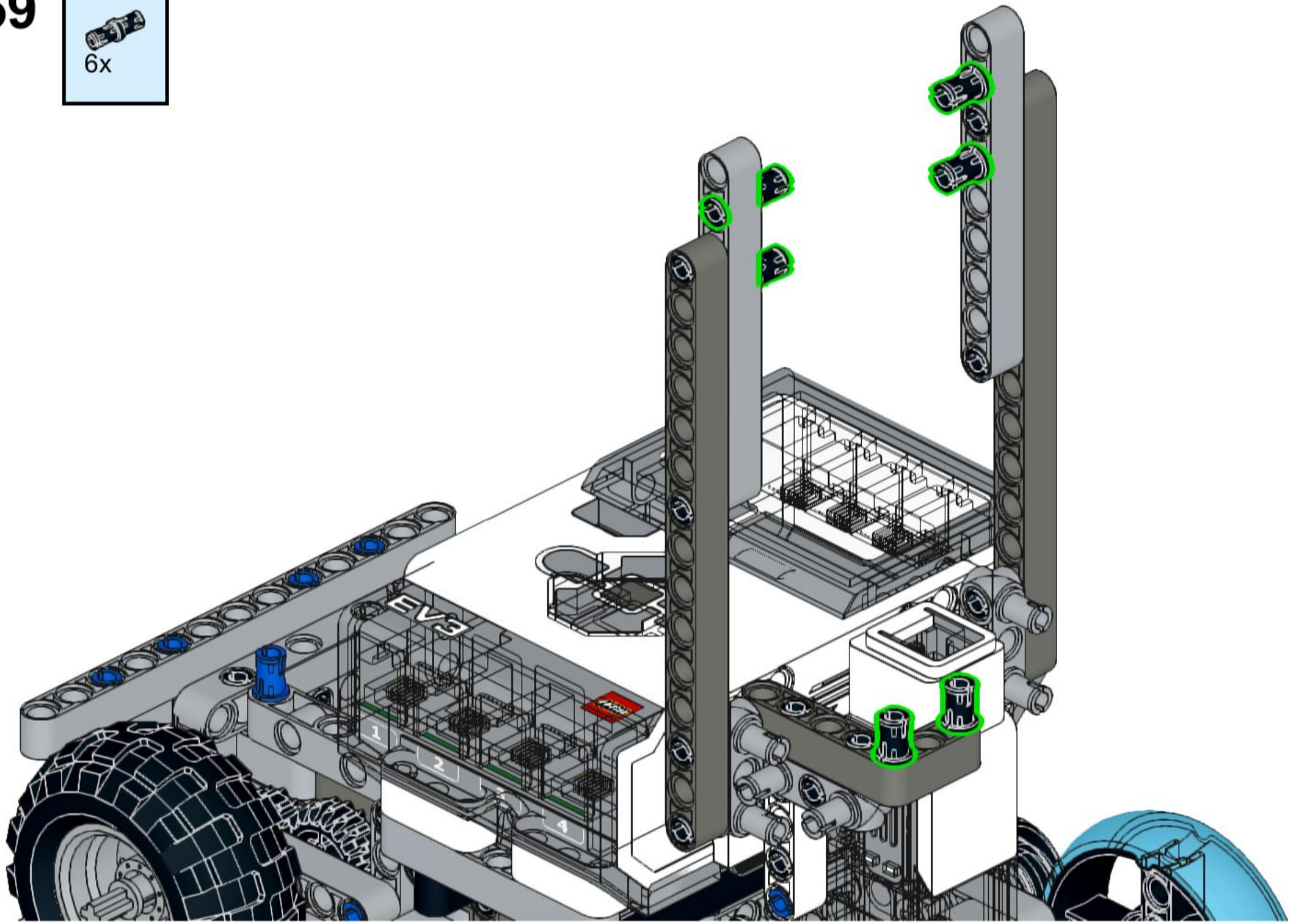

60

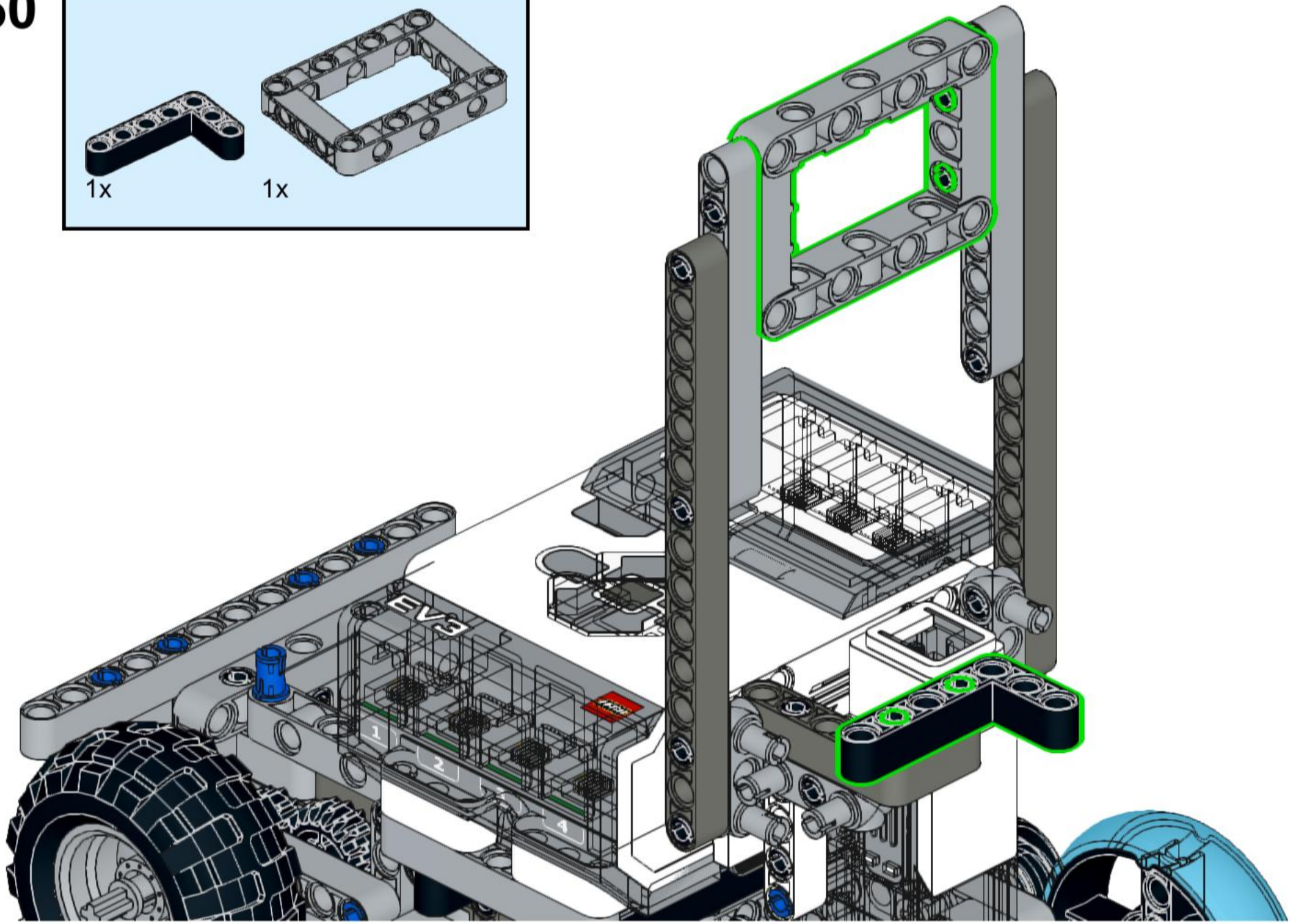

61

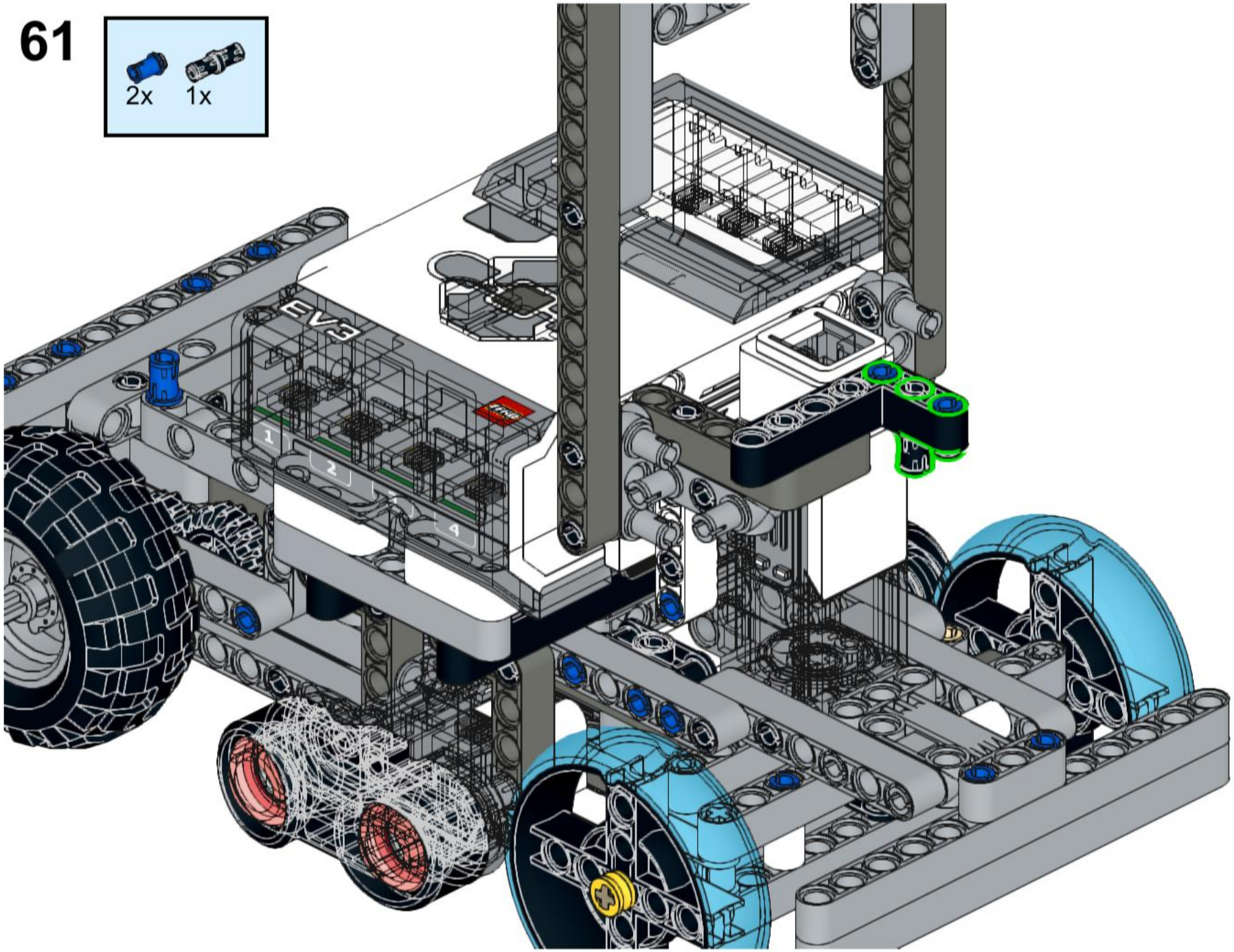

62

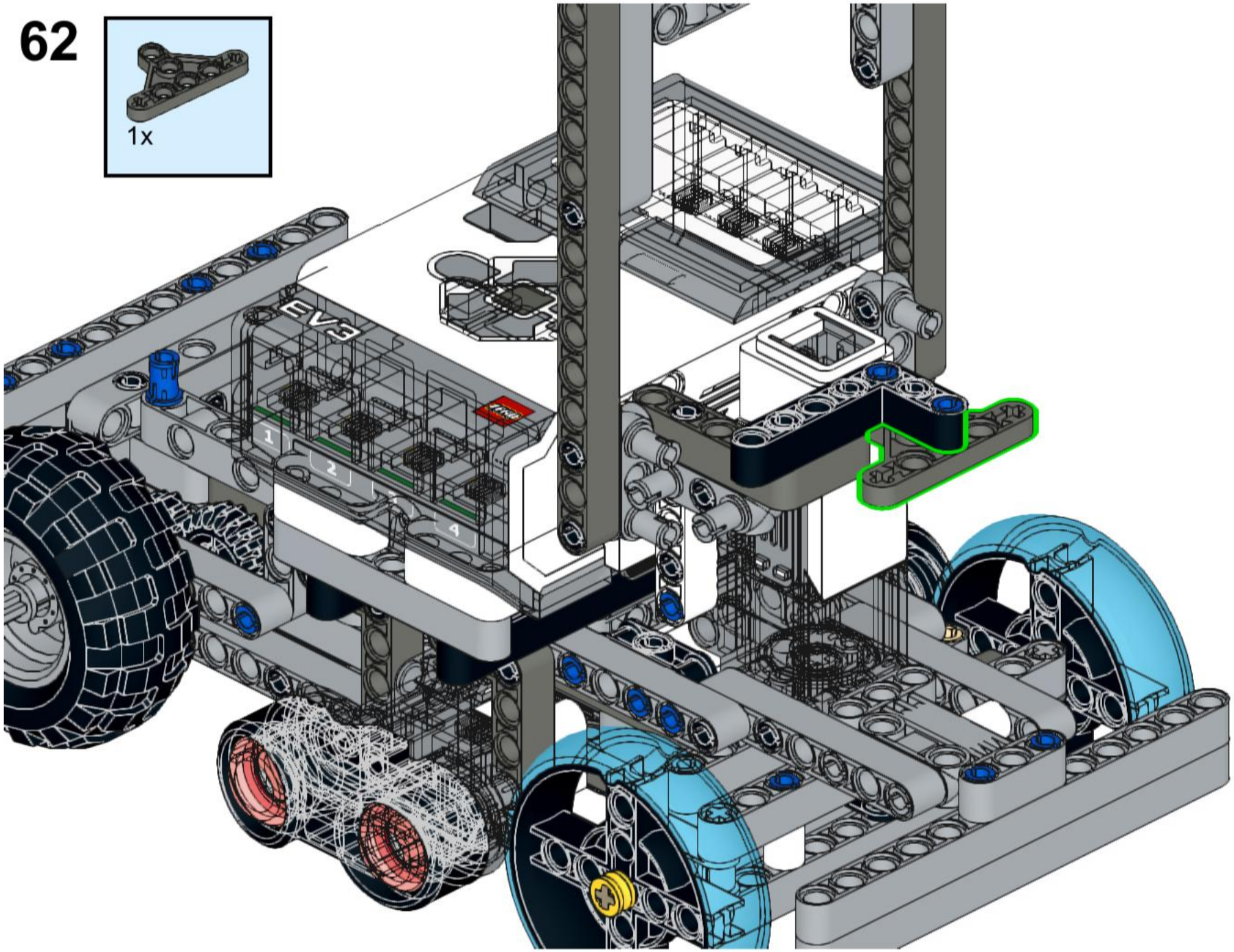

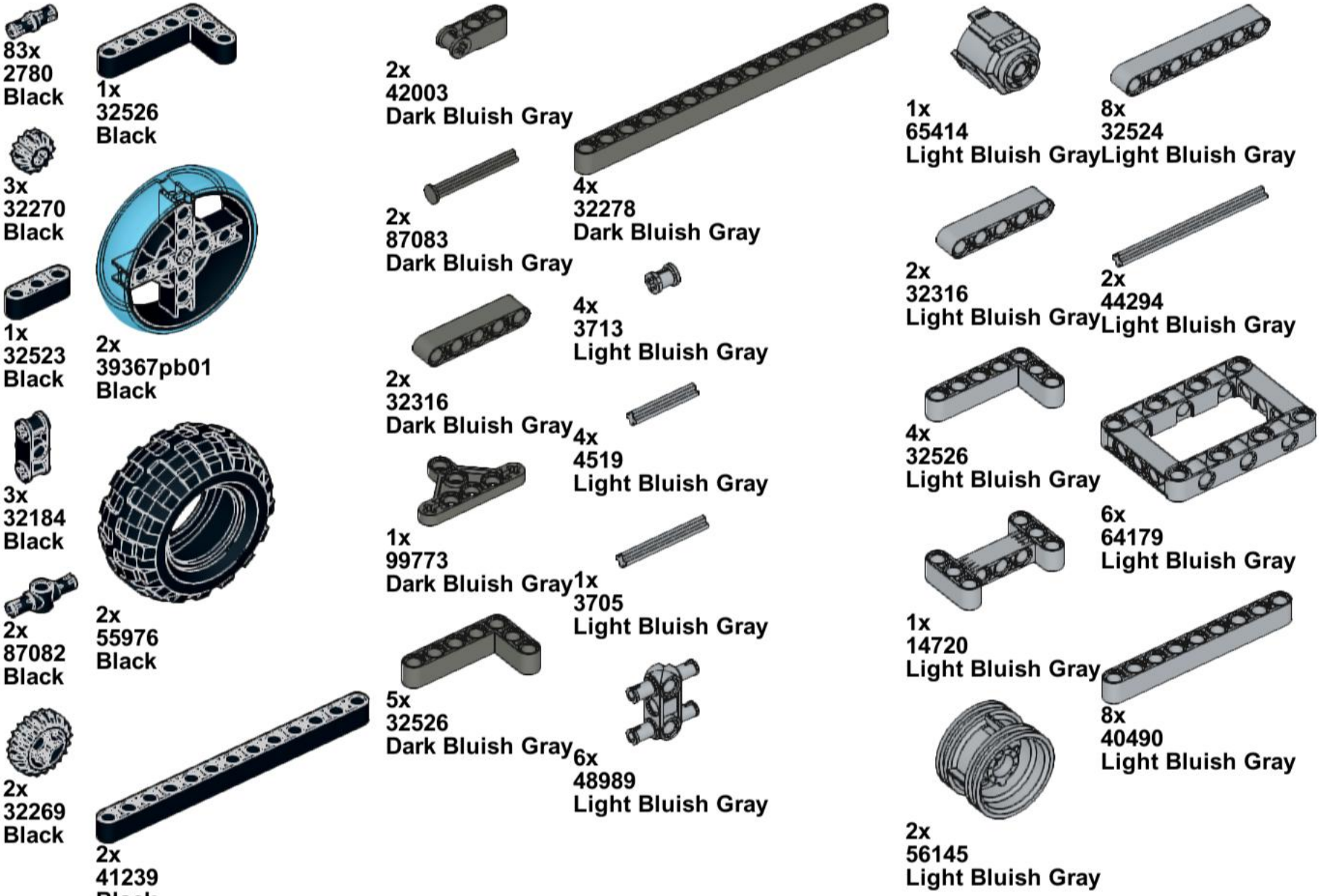
83x
2780
Black
1x
32526
Black
3x
32270
Black
1x
32523
Black
2x
39367pb01
Black
3x
32184
Black
2x
55976
Black
2x
87082
Black
2x
32269
Black
2x
41239
Black
2x
42003
Dark Bluish Gray
2x
87083
Dark Bluish Gray
2x
32316
Dark Bluish Gray
1x
99773
Dark Bluish Gray
5x
32526
Dark Bluish Gray
4x
32278
Dark Bluish Gray
4x
3713
Light Bluish Gray
4x
4519
Light Bluish Gray
1x
3705
Light Bluish Gray
6x
48989
Light Bluish Gray
1x
65414
Light Bluish Gray
8x
32524
Light Bluish Gray
2x
32316
Light Bluish Gray
2x
44294
Light Bluish Gray
4x
32526
Light Bluish Gray
6x
64179
Light Bluish Gray
1x
14720
Light Bluish Gray
8x
40490
Light Bluish Gray
2x
56145
Light Bluish Gray

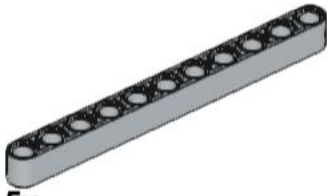

5x
32525
Light Bluish Gray

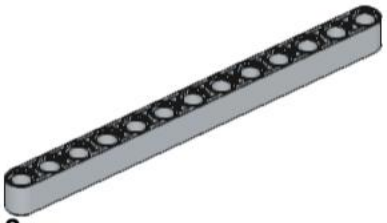

3x
41239
Light Bluish Gray

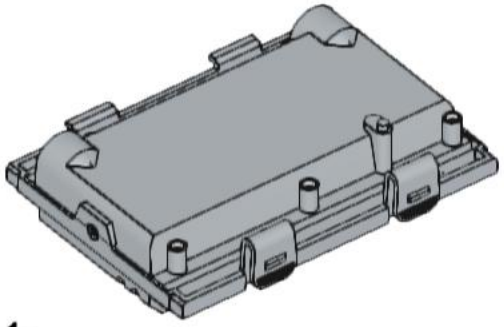

1x
95656
Light Bluish Gray

3x
18654
White

3x
32526
White

2x
95652
White

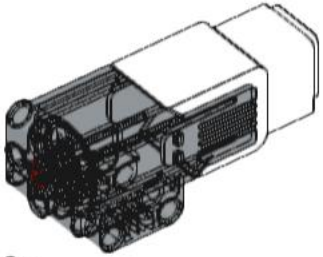

2x
99455
White

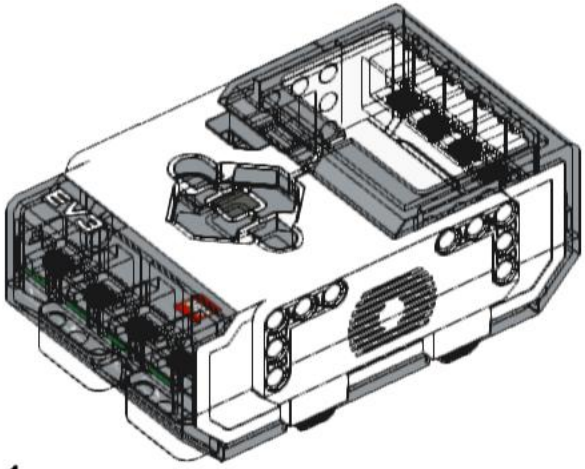

1x
95646c01
White

2x
32054
Red

1x
65413
Red

2x
6587
Dark Tan

5x
6589
Tan

2x
32556
Tan

4x
4265c
Yellow

2x
32523
Yellow

2x
4274
Blue

5x
43093
Blue

39x
6558
Blue