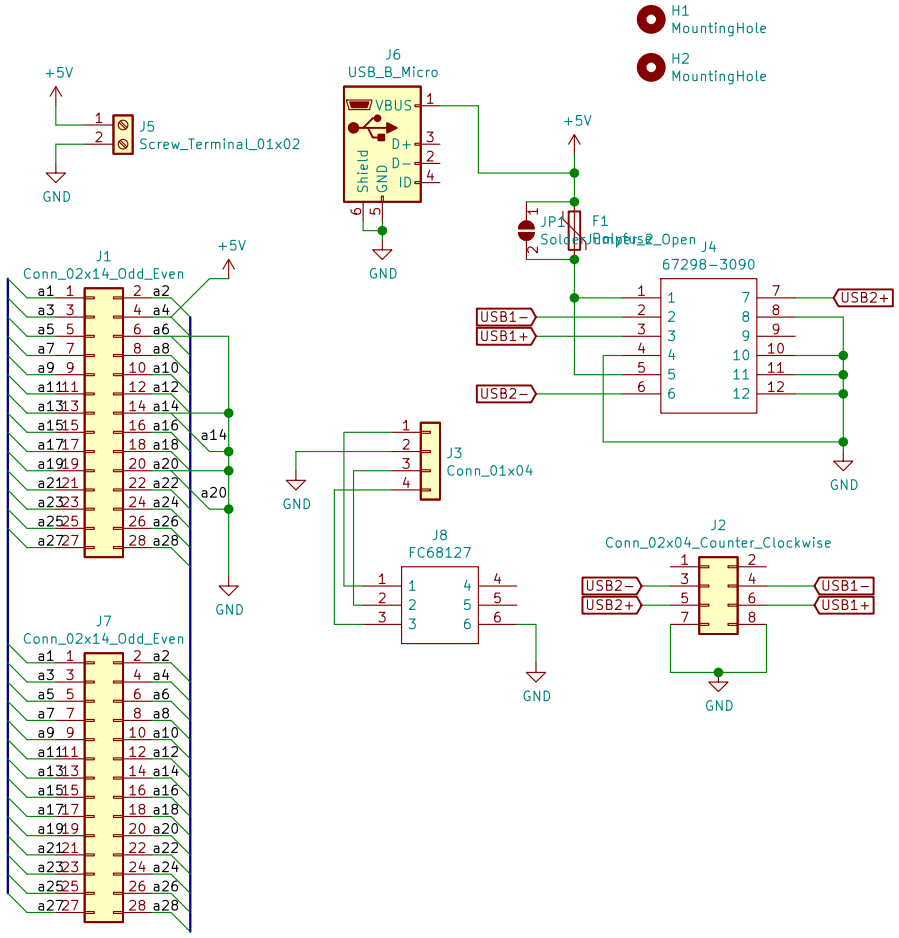

Sheet: /
File: iot-board-hat.sch

Title:

Size: A4	Date:	**Rev:**
KiCad E.D.A. kicad 5.1.9-73d0e3b20d88ubuntu18.04.1		Id: 1/1