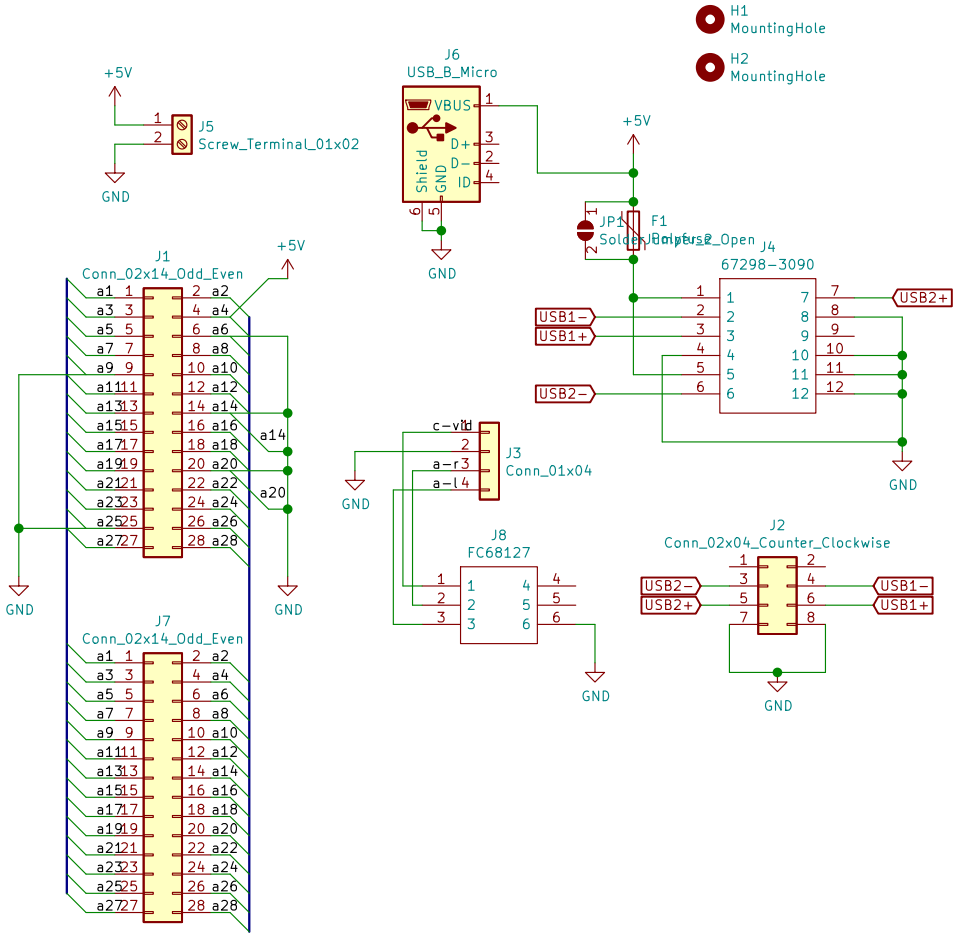

Sheet: /
File: iot−board−hat.sch

Title:

Size: A4	Date:	Rev:
KiCad E.D.A. kicad 5.1.9+dfsg1−1+build2		Id: 1/1