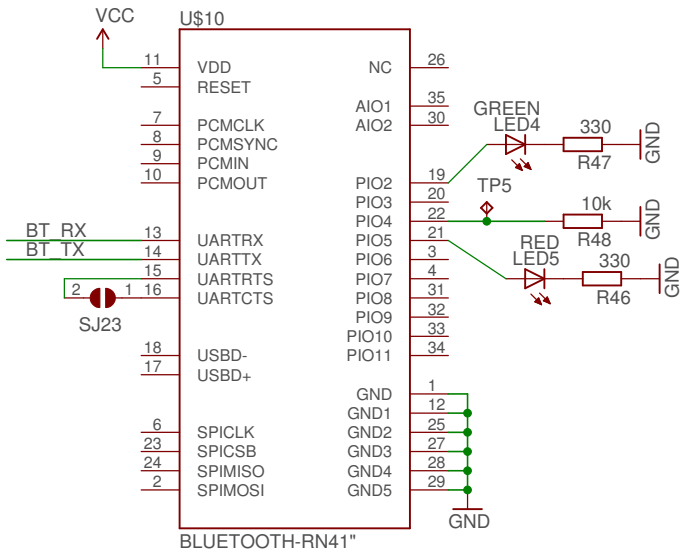

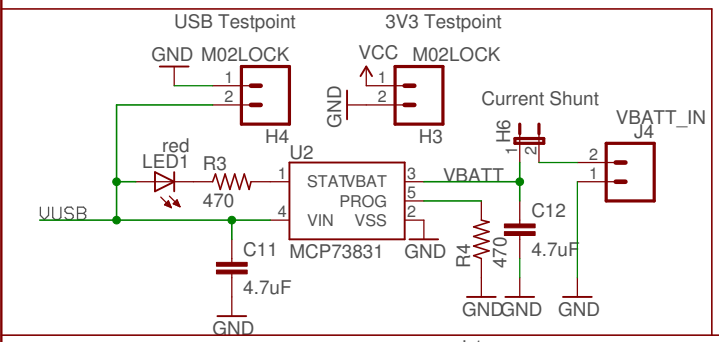

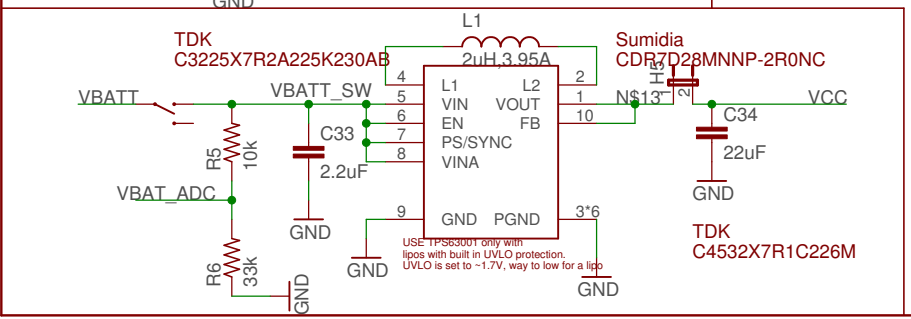

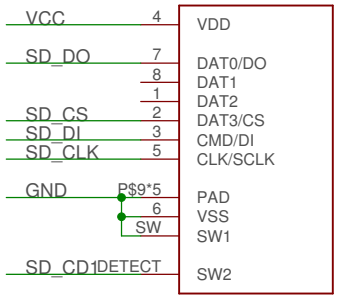

TITLE: rev1D

Document Number:

REV:

Date: not saved!

Sheet: 2/4