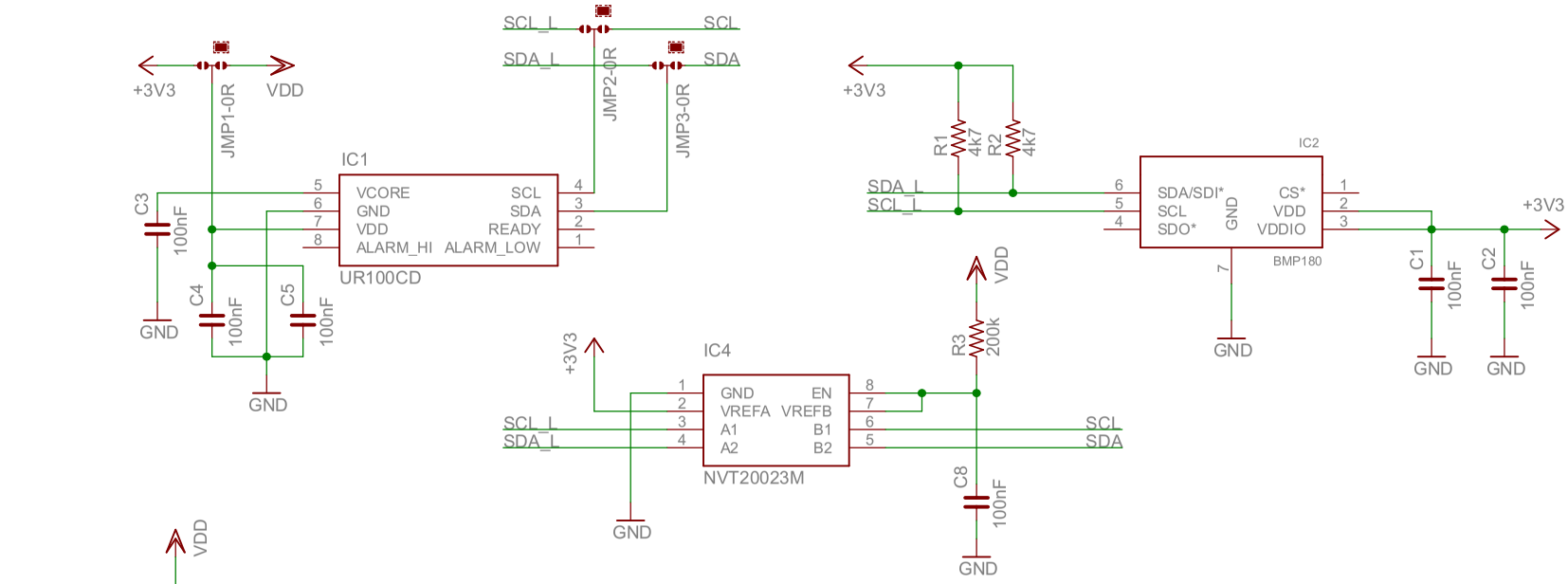

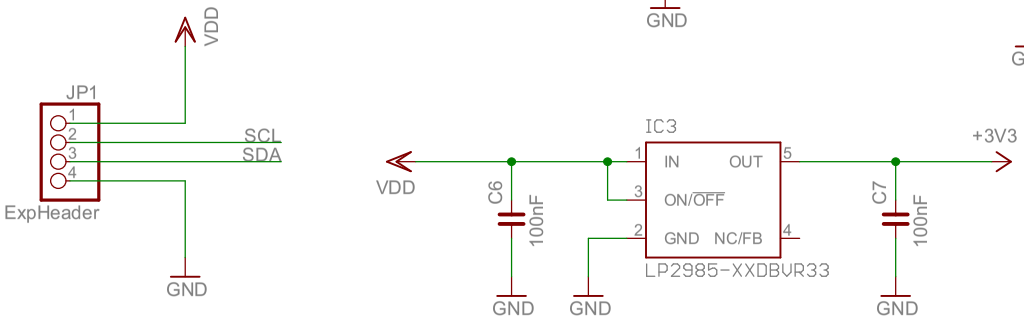

Copyright, European Union, 2015
JRC - Joint Research Centre,
IES - Institute for Environment and Sustainability,
Air and Climate Unit - (https://ec.europa.eu/jrc)
LiberaIntentio Srl (http://www.liberaintentio.com)

Released under Creative Commons Attribution-ShareAlike 4.0 International,
Reference Designs are provided "as is" and "with all faults".
Authors disclaim all other warranties, express or implied, regarding products,
including but not limited to, any implied warranties of merchantibility
or fitness for a particular purpose.
You may obtain a copy of the Licence at: http://www.creativecommons.org
CC BY SA 4.0 International.

AirSensEUR
Four channels 3 leads chemical sensors board
Rev 1.3
CHEMSCH_2_4