VK4WIP — IPSWICH & DISTRICT AMATEUR RADIO CLUB

AI in the Ham Shack

Useful, Safe & Simple — A Beginner's Guide

Club Presentation Night | 2026

📻 The One Thing to Remember

**"AI is not replacing the operator.
It is a smart assistant that saves time,
explains things, and helps you learn faster."**

📚 **Better Manual**

✍️ **Faster Note-Taker**

🎓 **Helpful Tutor**

📋 Tonight's Agenda

6 sections

1. What AI actually is — **plain English, no jargon**
2. Five practical uses in **your ham shack**
3. 🔴 **Live demo** — try it right now on your phone!
4. 🌍 **Propagation tools** — real-time band maps
5. ⚠️ **Safety tips** — what to watch out for
6. 💬 **Discussion** + your questions answered

🤖 What is AI? The Simple Version

AI = A very knowledgeable assistant you can type questions to

- Like having an **Elmer available 24 hours a day, 7 days a week**
- It has read **millions of books, manuals, and radio guides**
- You type a question — it responds **within seconds**
- Can answer in plain English — **no jargon unless you want it**
- It **never gets impatient** — ask the same question 10 times if needed
- The most useful tools are completely **FREE**

📡 Why Ham Radio + AI is a Perfect Match

🔧 Technical Calculations

Antenna lengths, impedance, frequency maths — AI handles it instantly without a calculator

✍️ Writing Help

QSL letters, club newsletters, emails to DX contacts — polished in minutes

📖 Always Learning

Our hobby rewards curiosity. AI is the ultimate study partner for any topic, any time

🌙 Works at 3am

During a rare DX opening, no Elmer is awake. AI is always ready with the band plan

📡 Example 1 — Antenna Design Help

Type this into ChatGPT:

```
💬 Your question:
"I'm a ham in Brisbane, Australia. Calculate the wire
lengths for a half-wave dipole for the 40-metre band.
I can hang it between two trees about 8 metres high.
What wire and connectors do I need?"
```

AI will give you:

- Exact wire lengths in metres **and** feet
- Simple materials list with local alternatives
- Tips for your specific height and layout
- Feeding options — coax, balun, what to buy

📐

468 ÷ f(MHz)

= total dipole length in feet

468 ÷ 7.1 MHz
= **65.9 feet**
(≈ 20.1 metres total)

AI calculates this in seconds — no formula needed!

📡 The 40m Half-Wave Dipole

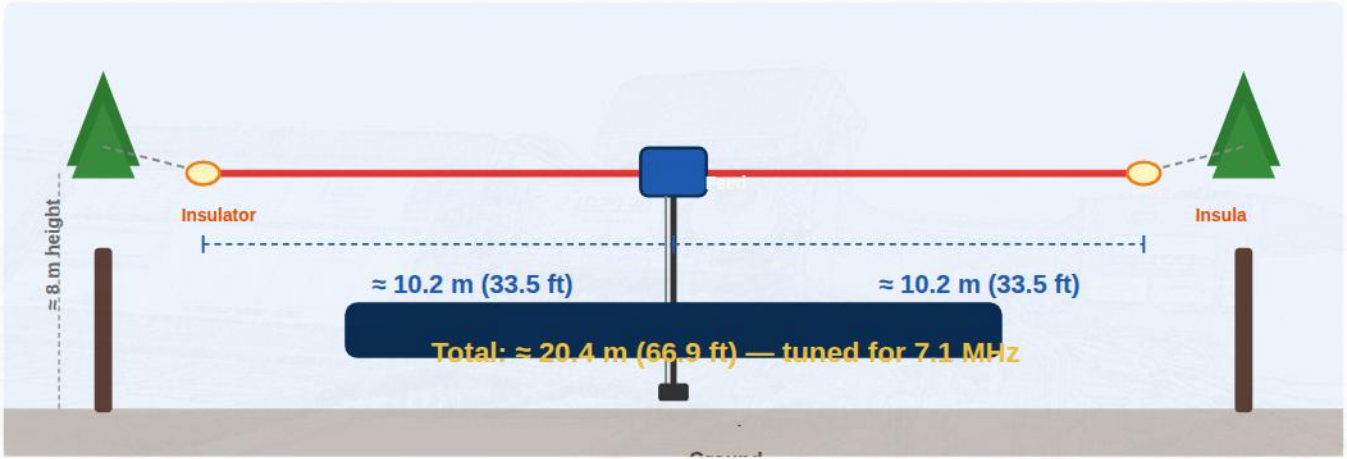

📒 Example 2 — QSO Log Analysis

Paste your log into ChatGPT and ask:

```
💬 Example questions:
"What is my most active time of day?"

"Which bands am I working most contacts on?"

"List all my DX contacts outside VK — which country
appears most?"
```

📊 AI Shows You:

- Peak operating hours
- Band usage breakdown
- DX countries worked
- Mode statistics (SSB / FT8)

💡 Works with plain text, ADIF, or a photo of your paper log!

✉️ Example 3 — Writing Emails & QSL Letters

💬 Ask AI:

```
"Write a friendly email to a Japanese
ham I worked on 40m SSB last night. My
callsign is VK4XXX. I want to request a
QSL card and compliment their signal."
```

Also great for:

- Club newsletter articles
- Meeting agendas & minutes
- WICEN coordination messages
- Welcome letters for new members

🤖 AI Draft:

Dear OM,

It was a pleasure working you on 40m SSB last night. My callsign is **VK4XXX**, located in Ipswich, Queensland, Australia.

Your signal was **59 throughout our QSO**. I would be honoured to exchange QSL cards via the bureau...

[continues for 3 more paragraphs]

🔧 Example 4 — Schematic Troubleshooting

- Take a **clear photo** of your schematic or PCB
- Upload the photo to **ChatGPT** (free with account)
- Describe the problem: **"Low TX power on 20m only"**
- AI suggests **likely fault areas to check**
- Ask follow-up: **"How do I test the driver stage?"**

💬 Example prompt:

```
"Here's the schematic for my Yaesu FT-101. RX works
fine but TX power is very low on all bands. The driver
stage is Q3. What should I check first?"
```

Good photo tip:

Good lighting + full schematic in frame = much better AI analysis

⚠️ **Always have a qualified technician verify advice before working on mains-connected equipment**

🎓 Example 5 — Licence Study Buddy

Studying for Foundation, Standard, or Advanced?

💬 Try asking AI:

```
"Explain the difference between AM and FM to a
complete beginner"

"Give me 5 practice questions about antenna theory for
the Australian Advanced exam"

"Why do we use a balun on a dipole? Explain simply, no
jargon."
```

🕐

Study at **any hour** — no waiting for class

♾️

Unlimited questions — it never gets impatient

🎯

Tailored to **your level** — beginner or expert

💬 ChatGPT — How to Get Started

- Made by **OpenAI** — a major technology company
- Free to use at **chat.openai.com**
- Just type a question — **like texting a very smart friend**
- Works on **phone, tablet, or computer**
- No app to install — just a web browser
- Only need an **email address** to sign up — no payment card

Alternative: **Claude** at claude.ai — also free, also excellent

💬

chat.openai.com

Free — just your email

🤖

claude.ai

Also free — very friendly interface

💡 Getting Better Answers — Prompt Tips

Key skill

The more detail you give → the better the answer

📖 "Explain…"

"Explain SWR to me like I'm new to HF radio"

✏️ "Rewrite…"

"Rewrite this club notice to sound friendlier and easier to read"

⚖️ "Compare…"

"Compare the Icom IC-7300 and IC-7610 for a beginner HF station"

📄 "Summarise…"

"Summarise the key points of this antenna manual page in dot points"

● LIVE DEMO

Read a Radio Manual with AI 📄

🖥️ **Tabs are open — let's summarise a manual page together!**

💬 **ChatGPT (Free)**

chat.openai.com

🤖 **Claude (Free)**

claude.ai

💬 Paste in any manual page, then ask:

```
"Here is a page from a radio manual or operating guide. Summarise the key points in plain English as a short dot-point checklist for someone returning to HF after 20 years."
```

• LIVE DEMO

AI as Your Exam Tutor 🎓

Not to cheat — to understand why the answer is right

Sample theory question:

"What does an SWR of 3:1 indicate, and what is the likely effect on your transmitter?"

1. "Explain why the correct answer is right, in plain English."
2. "Explain it at three levels: beginner, Standard licence, and Advanced licence."
3. "Give me two more practice questions on the same topic."

🌍 Propagation Prediction with WSPR

= Weak Signal Propagation Reporter

(pronounced "whisper")

- A tiny automated beacon — **even just 200 mW!**
- Stations worldwide **hear and report** your signal
- Creates a **real-time propagation map**
- Free to view at **wspr.rocks**
- AI can **interpret what the map means** for your plans

● LIVE DEMO

Propagation Maps + AI Interpreter 🌍

See the data → Ask AI what to do with it

1. **Open the maps** — WSPR.rocks & PSKReporter are in the tabs. Find VK4 signals on the map and note where they're being received.

2. **Ask AI to interpret it:**

💬 Paste this into ChatGPT or Claude:

```
"I can see VK4 signals being received in Japan and Europe on WSPR
right now on 40m. Is this a good time to call CQ on 40m SSB for JA?
What time would be best?"
```

3. **Try a follow-up:** "Explain what WSPR actually measures and why it's useful for SSB operators."

📡
WSPR.rocks
wspr.rocks

📊
PSKReporter
pskreporter.info

🔒 Safety Tips for Using AI Online

- ✅ Only use **trusted sites**: **chat.openai.com** or **claude.ai** — **bookmark them right now**
- ❌ **Never enter** your bank details, passwords, Medicare number, or home address into any AI tool
- ⚠️ AI can make **honest mistakes** — always double-check important technical information before acting on it
- 🎣 Watch out for **fake AI websites** — scammers use AI brand names. When in doubt, ask a family member or club member first
- 📧 Consider using a **separate email** for AI tools — e.g. a free Gmail created just for this purpose

⚠️ What AI Gets Wrong

Know the limits

🎭 "Hallucinations"

AI sometimes makes things up — **confidently!** Part numbers, regulations, and specs can be wrong. Always verify.

📅 Outdated Information

Training data has a cutoff date. New band plans, equipment releases, and regulations may not be known to the AI.

🔇 Can't Hear or See

AI cannot listen to your audio, read your S-meter, or measure your SWR. It advises based only on what **you** describe.

📚

The Golden Rule

For important technical decisions, always verify with:

- Your Elmer
- ARRL Handbook
- WIA website
- Manufacturer specs

Use AI as a starting point — not as the final word

💬 Discussion Time

~10–15 min

DISCUSSION 1

"What's the **most useful thing AI could help you with** in your ham shack or club activities?"

DISCUSSION 2

"Are you **worried about AI giving wrong technical advice?** How would you double-check important information?"

DISCUSSION 3

"Could AI help our club — for example, **writing the newsletter, preparing WICEN event plans, or welcoming new members?**"

🚀 Your First Steps with AI

Do this week!

1 **Create your free account**

Go to **chat.openai.com** → Sign up → Enter your email. Takes 2 minutes. No payment card needed.

2 **Ask your first ham radio question**

Type: **"I'm a ham in VK4. Help me understand 40m propagation to Japan."** — just see what it says!

3 **Bookmark it and keep exploring**

Save **chat.openai.com** as a favourite. Next time you have a ham radio question — try AI first!

💡 **Be specific in your questions — the more detail you give, the better the answer!**

🛠️ More Free AI & Ham Radio Tools

📝 **HamStudy.org**
Licence exam practice tests — free

📡 **QRZ.com**
Callsign lookup & logbook

🌐 **DXWatch.com**
Live DX cluster spots

🇦🇺 **WIA.org.au**
Wireless Institute of Australia

Thank You!

73 de **VK4WIP**

Ipswich & District Amateur Radio Club

Website	Questions?	Next meeting
ipswichradioclub.org.au	**Ask us tonight!**	**See you there!**