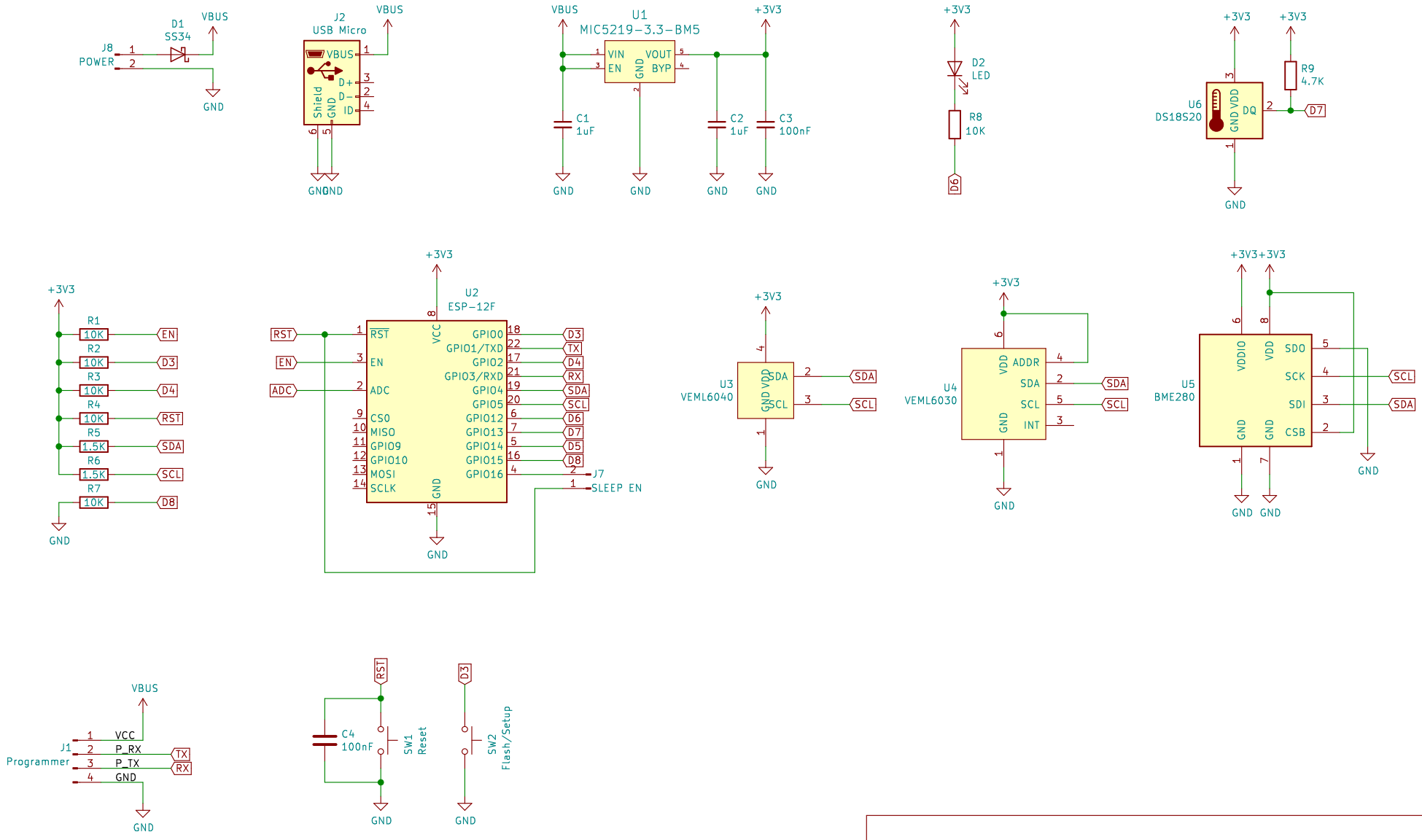

Invize AB

Sheet: /

File: WiFi Environment Sensor Node.sch

Title: WiFi environment sensor node

Size: A4	Date: 2019-04-04	**Rev: R2**
KiCad E.D.A. kicad (5.1.0)-1		Id: 1/1