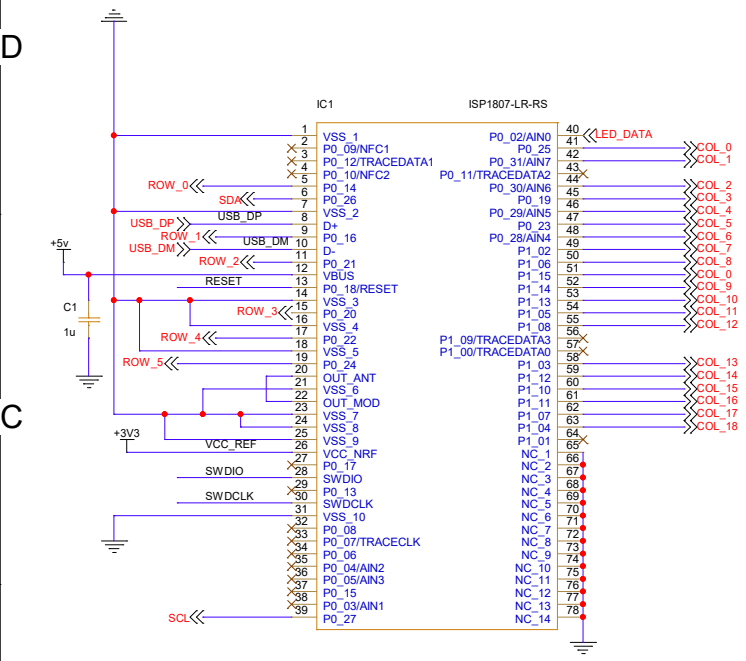

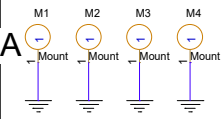

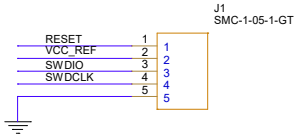

ROW_5

Title	<Title>	
Size A3	Document Number <Doc>	Rev <RevCo
Date: Saturday, January 24, 2026	Sheet 1 of 6	

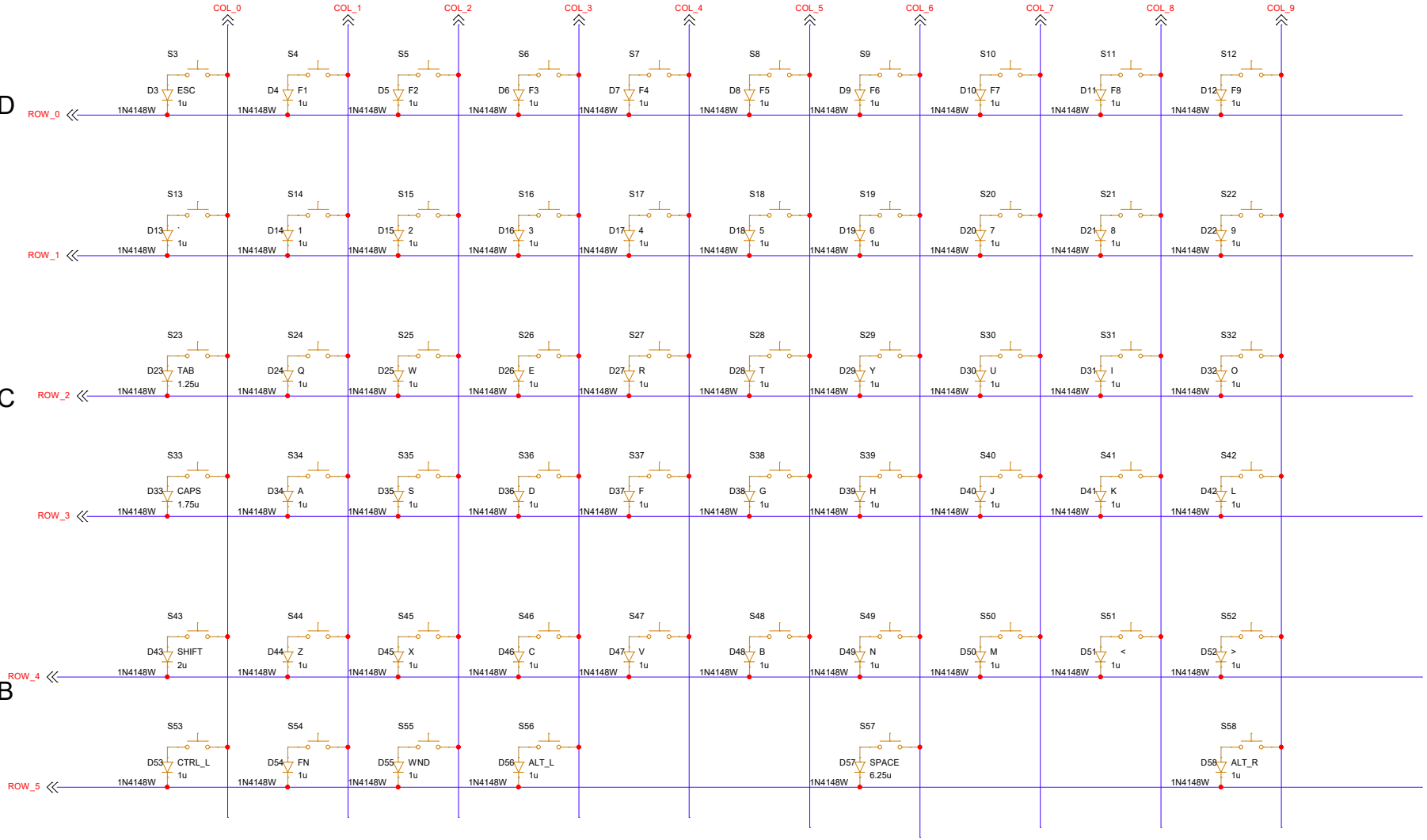

Title	<Title>	
Size A3	Document Number <Doc>	Rev <RevCo
Date: Saturday, January 24, 2026	Sheet 2 of 6	

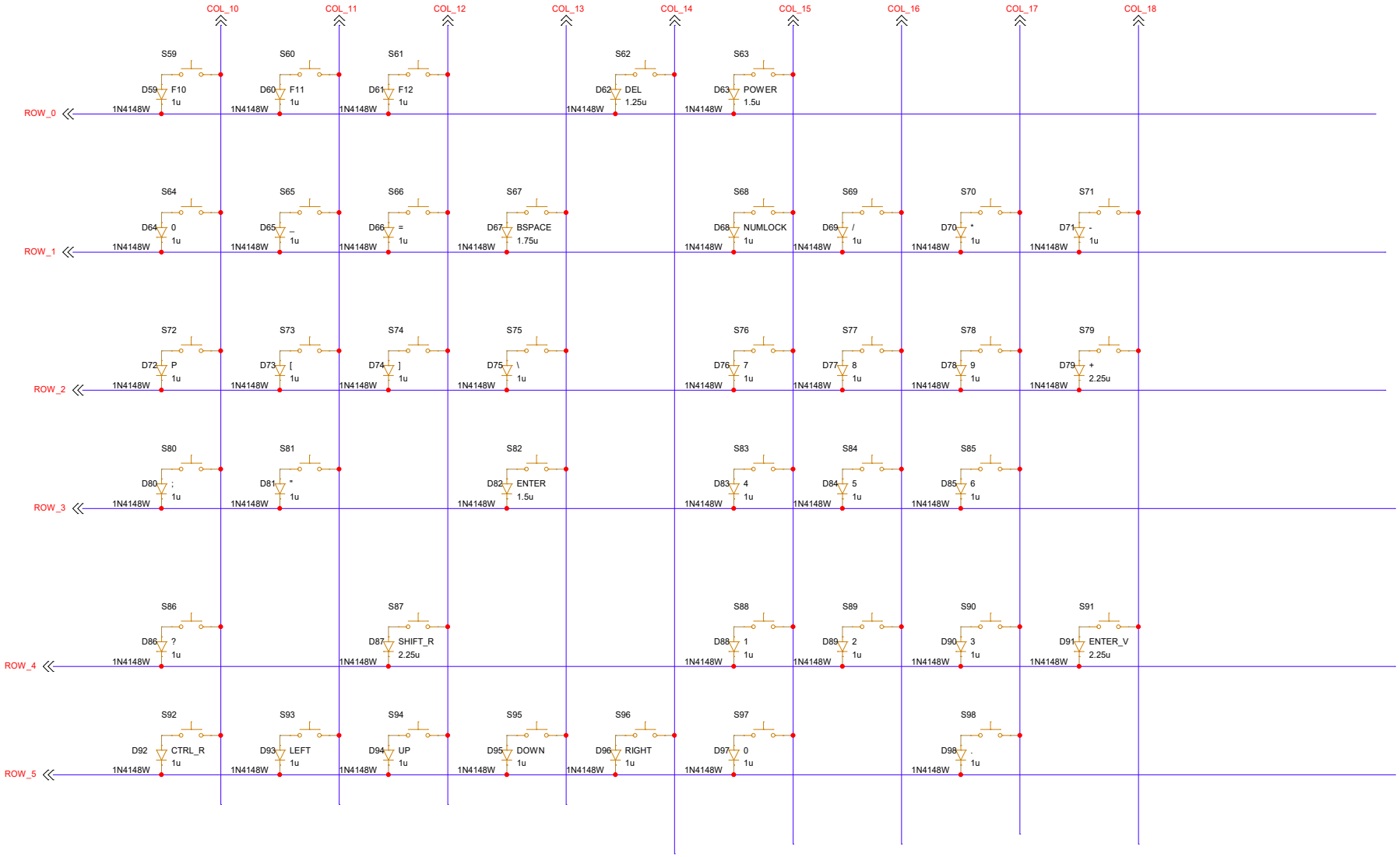

Title	<Title>	
Size A3	Document Number <Doc>	Rev <RevCo
Date: Saturday, January 24, 2026	Sheet 3 of 6	

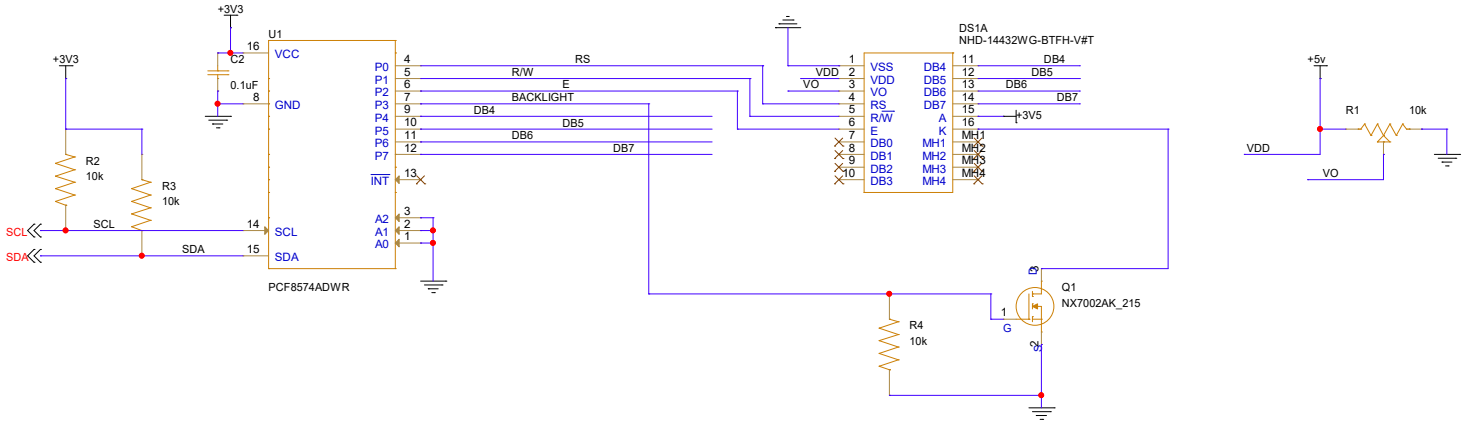

Title	<Title>		
Size A3	Document Number <Doc>		Rev <RevCode>
Date: Saturday, January 24, 2026	Sheet 4 of 6		

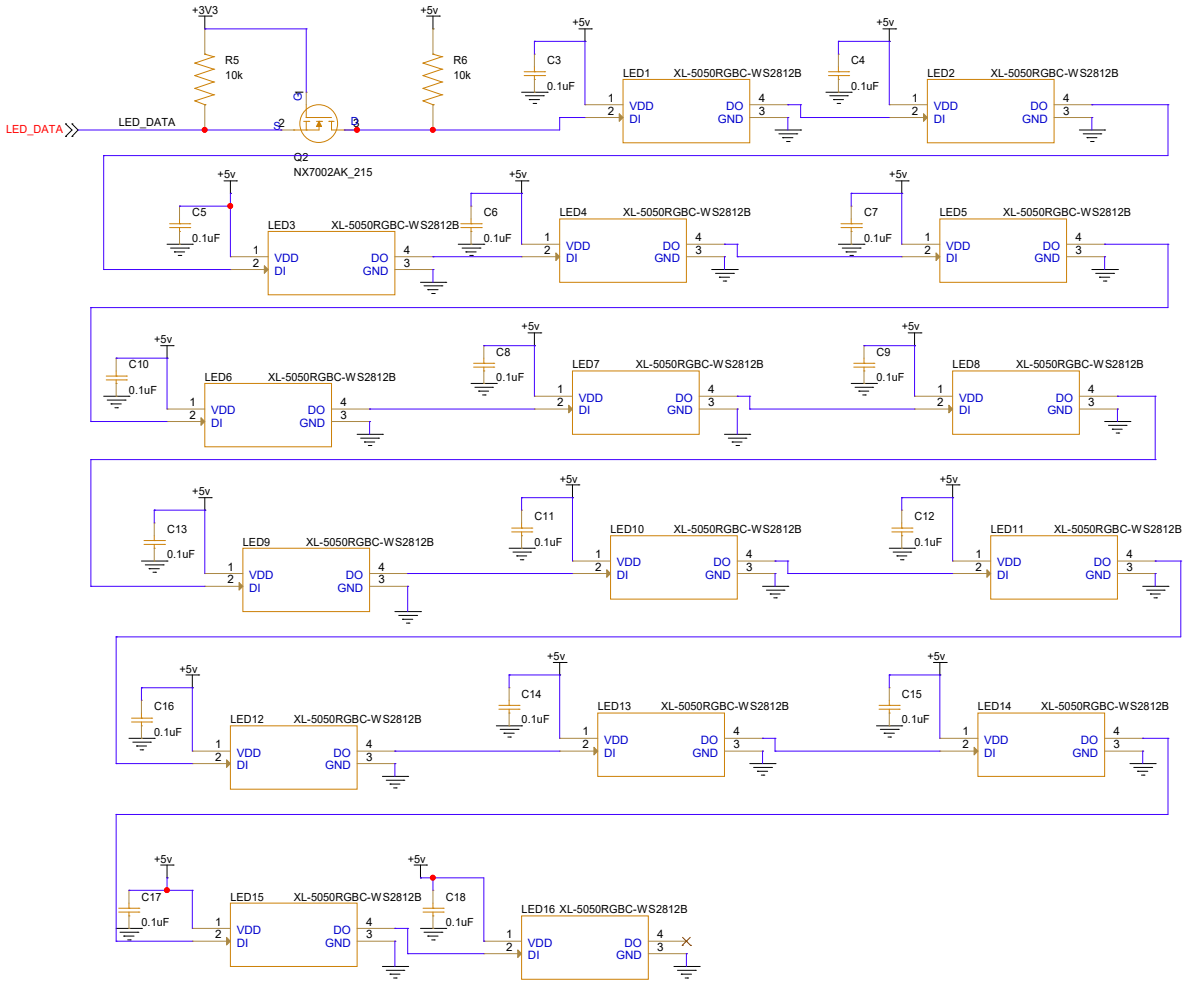

Title	<Title>	
Size A3	Document Number <Doc>	Rev <RevCo
Date: Saturday, January 24, 2026	Sheet 5 of 6	

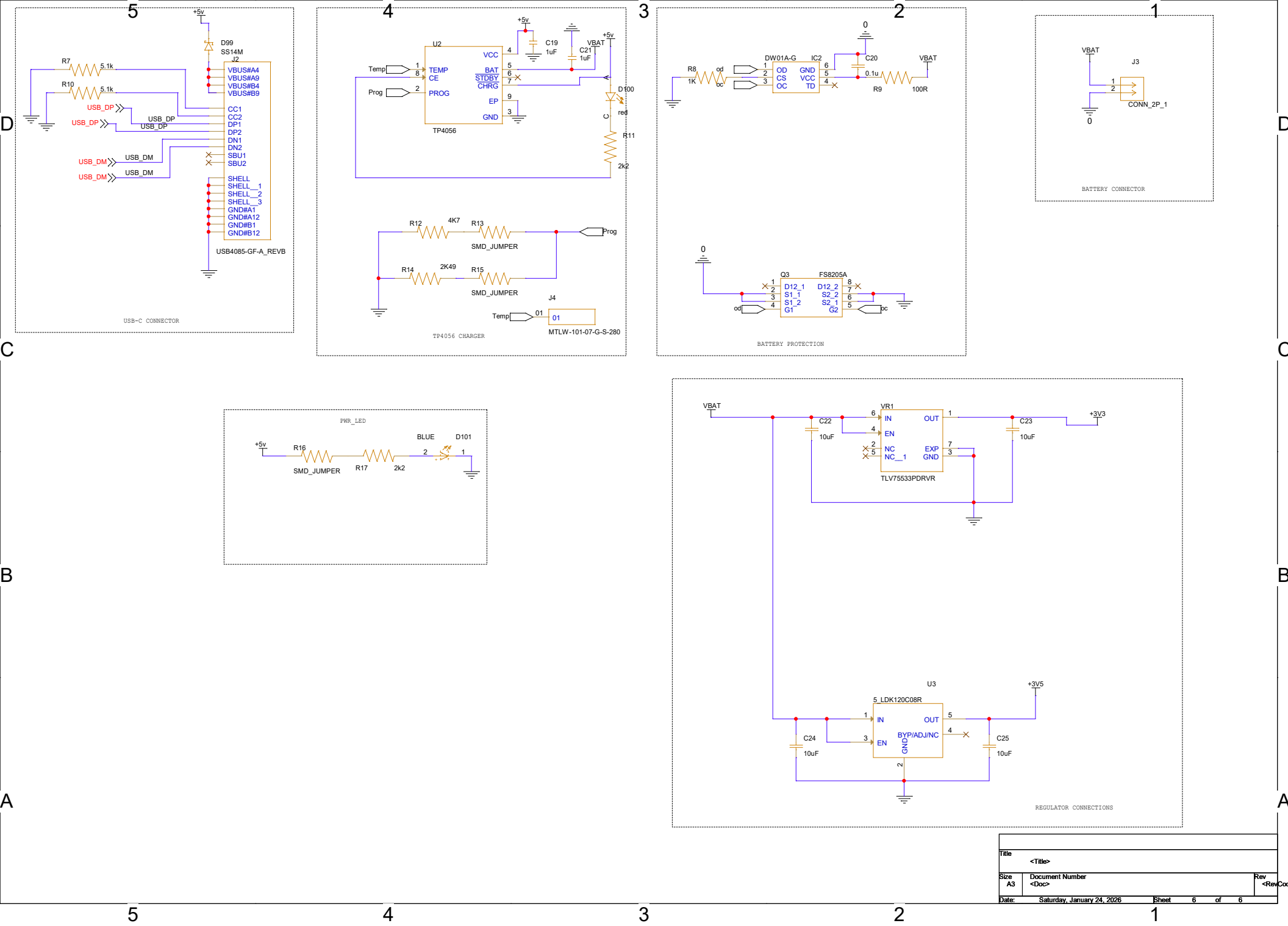
USB-C CONNECTOR
+5v
D99
SS14M
J2
R7
5.1k
R10
5.1k
USB_DP
USB_DP
USB_DP
USB_DP
USB_DM
USB_DM
USB_DM
USB_DM
VBUS#A4
VBUS#A9
VBUS#B4
VBUS#B9
CC1
CC2
DP1
DP2
DN1
DN2
SBU1
SBU2
SHELL
SHELL__1
SHELL__2
SHELL__3
GND#A1
GND#A12
GND#B1
GND#B12
USB4085-GF-A_REVB
TP4056 CHARGER
U2
TP4056
Temp
Prog
TEMP
CE
PROG
VCC
BAT
STDBY
CHRG
EP
GND
C19
1uF
C21
1uF
VBAT
D100
red
R11
2k2
R12
4K7
R13
SMD_JUMPER
R14
2K49
R15
SMD_JUMPER
J4
MTLW-101-07-G-S-280
BATTERY PROTECTION
DW01A-G
IC2
R8
1K
od
oc
OD
CS
OC
GND
VCC
TD
C20
0.1u
R9
100R
Q3
FS8205A
D12_1
S1_1
S1_2
G1
D12_2
S2_2
S2_1
G2
BATTERY CONNECTOR
J3
CONN_2P_1
PWR_LED
+5v
R16
SMD_JUMPER
R17
2k2
BLUE
D101
REGULATOR CONNECTIONS
VBAT
VR1
IN
EN
NC
NC__1
OUT
EXP
GND
TLV75533PDRVR
C22
10uF
C23
10uF
+3V3
U3
5_LDK120C08R
IN
EN
OUT
BYP/ADJ/NC
GND
C24
10uF
C25
10uF
+3V5
Title
<Title>
Size
A3
Document Number
<Doc>
Rev
Date:
Saturday, January 24, 2026
Sheet
6
of
6