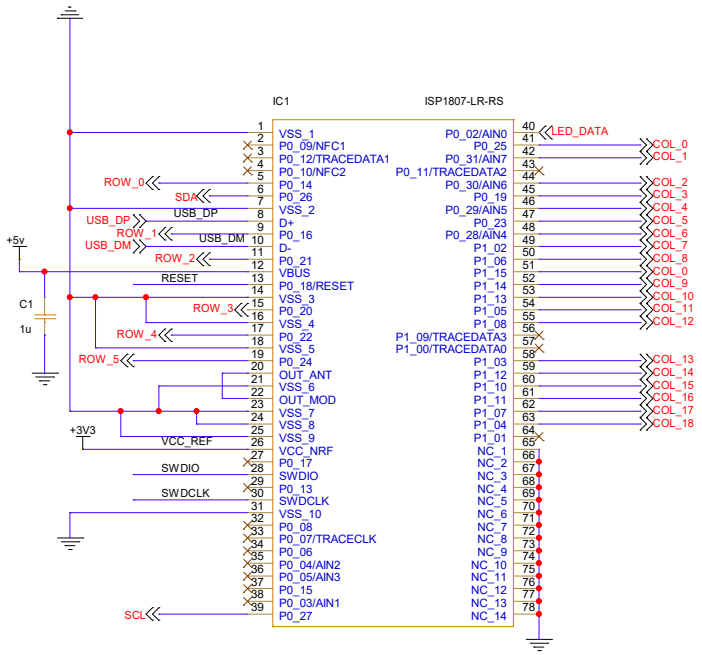

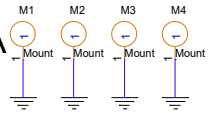

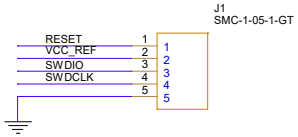

ROW_5

Title	<Title>	
Size A3	Document Number <Doc>	Rev <RevCo
Date: Sunday, January 25, 2026	Sheet 1 of 6	

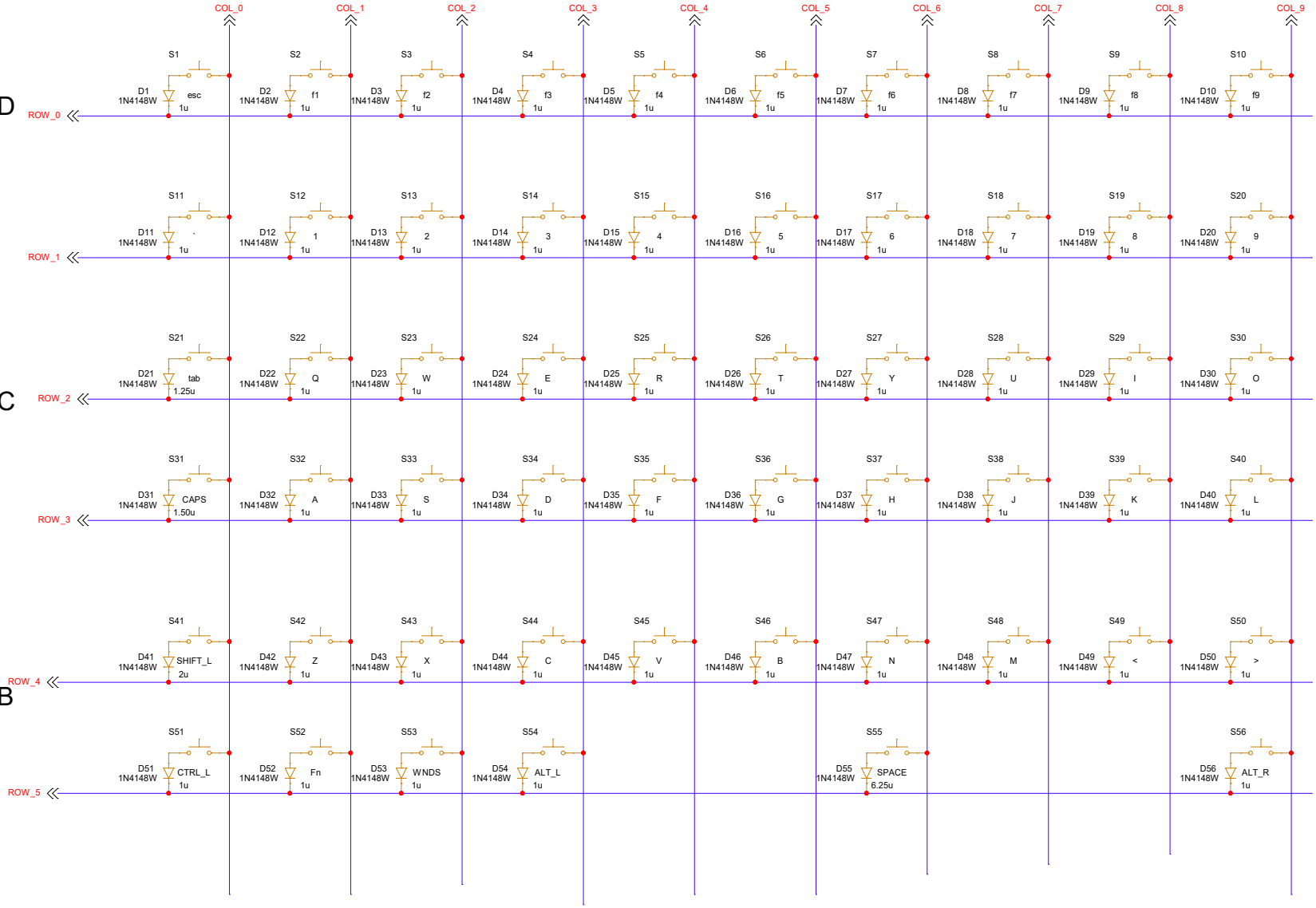

Title	<Title>	
Size A3	Document Number <Doc>	Rev <RevCo
Date: Sunday, January 25, 2026	Sheet 2 of 6	

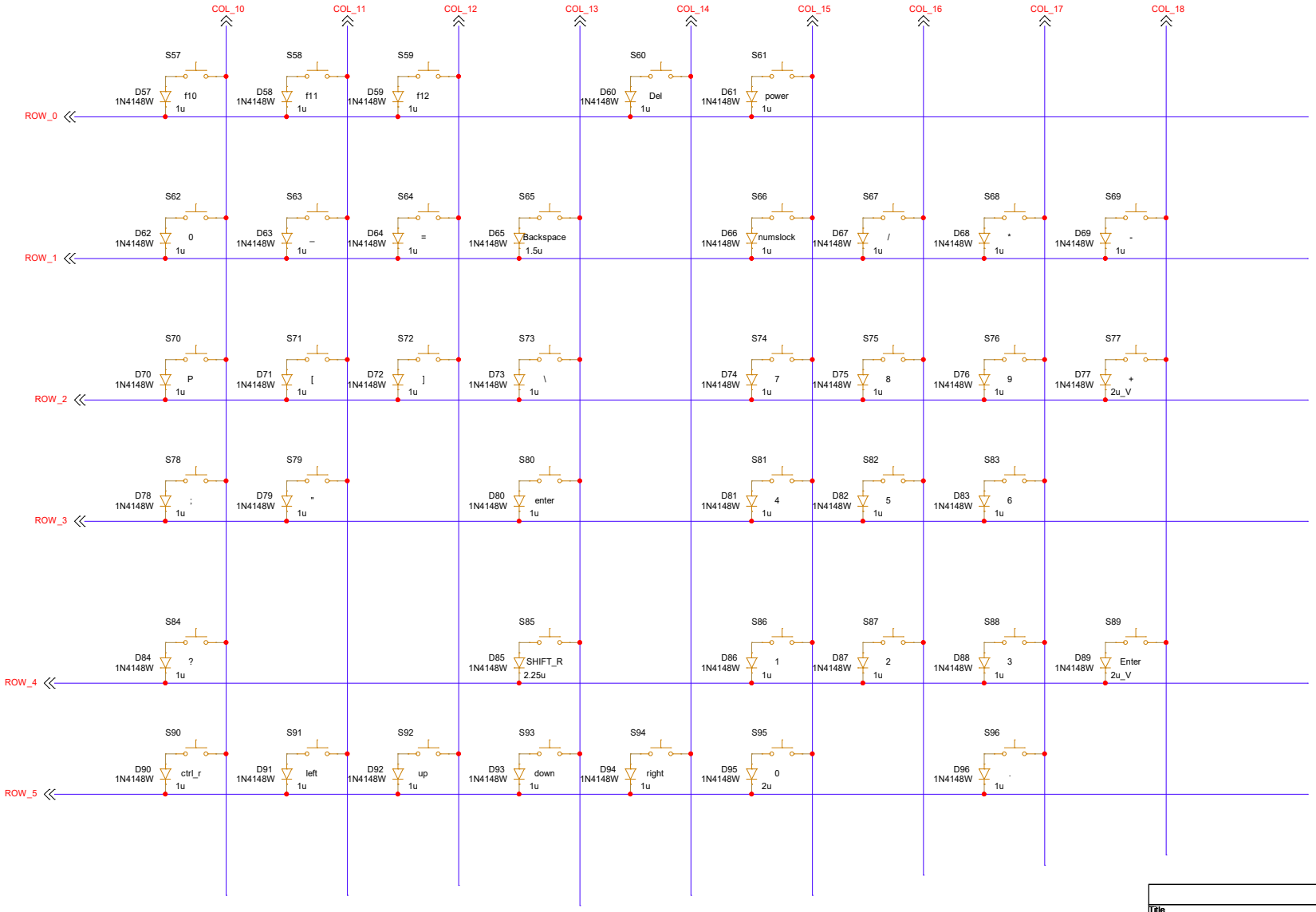

Title	<Title>	
Size A3	Document Number <Doc>	Rev <RevCo
Date: Sunday, January 25, 2026	Sheet 3 of 6	

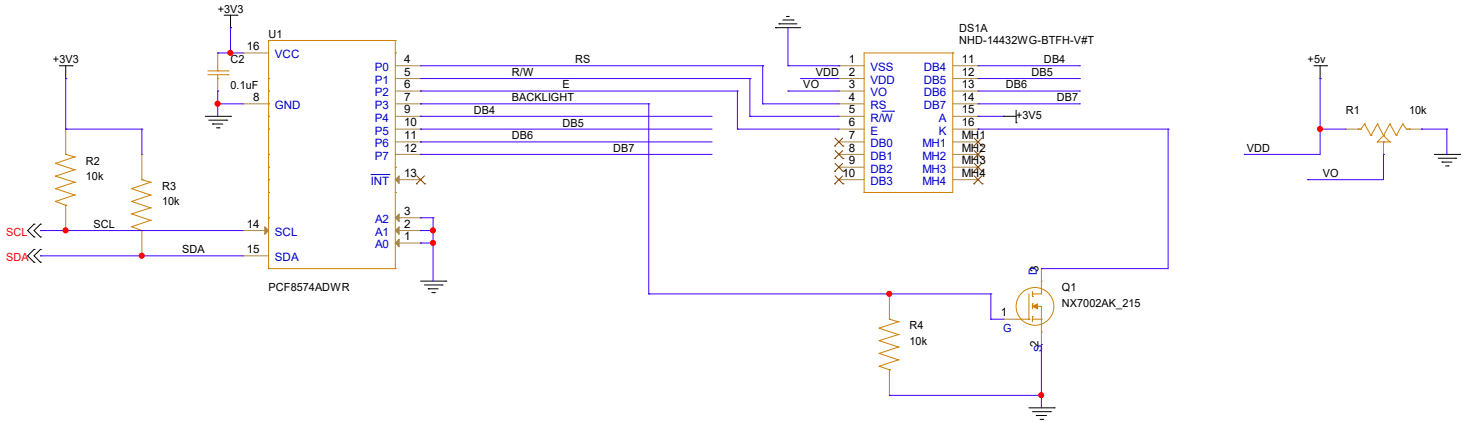

Title	<Title>		
Size A3	Document Number <Doc>		Rev <RevCode>
Date: Sunday, January 25, 2026	Sheet 4 of 6		

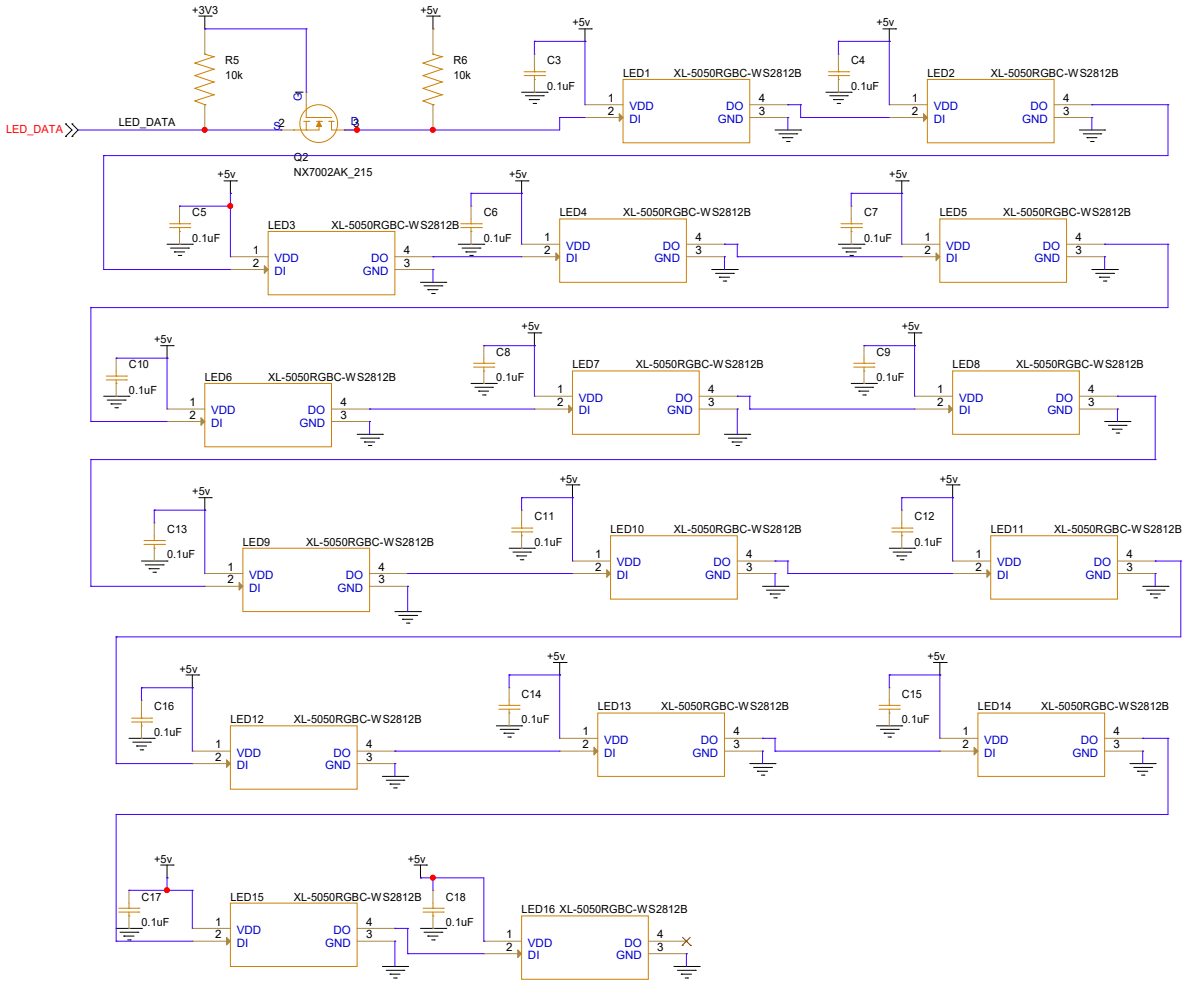

Title	<Title>	
Size A3	Document Number <Doc>	Rev <RevCo
Date: Sunday, January 25, 2026	Sheet 5 of 6	

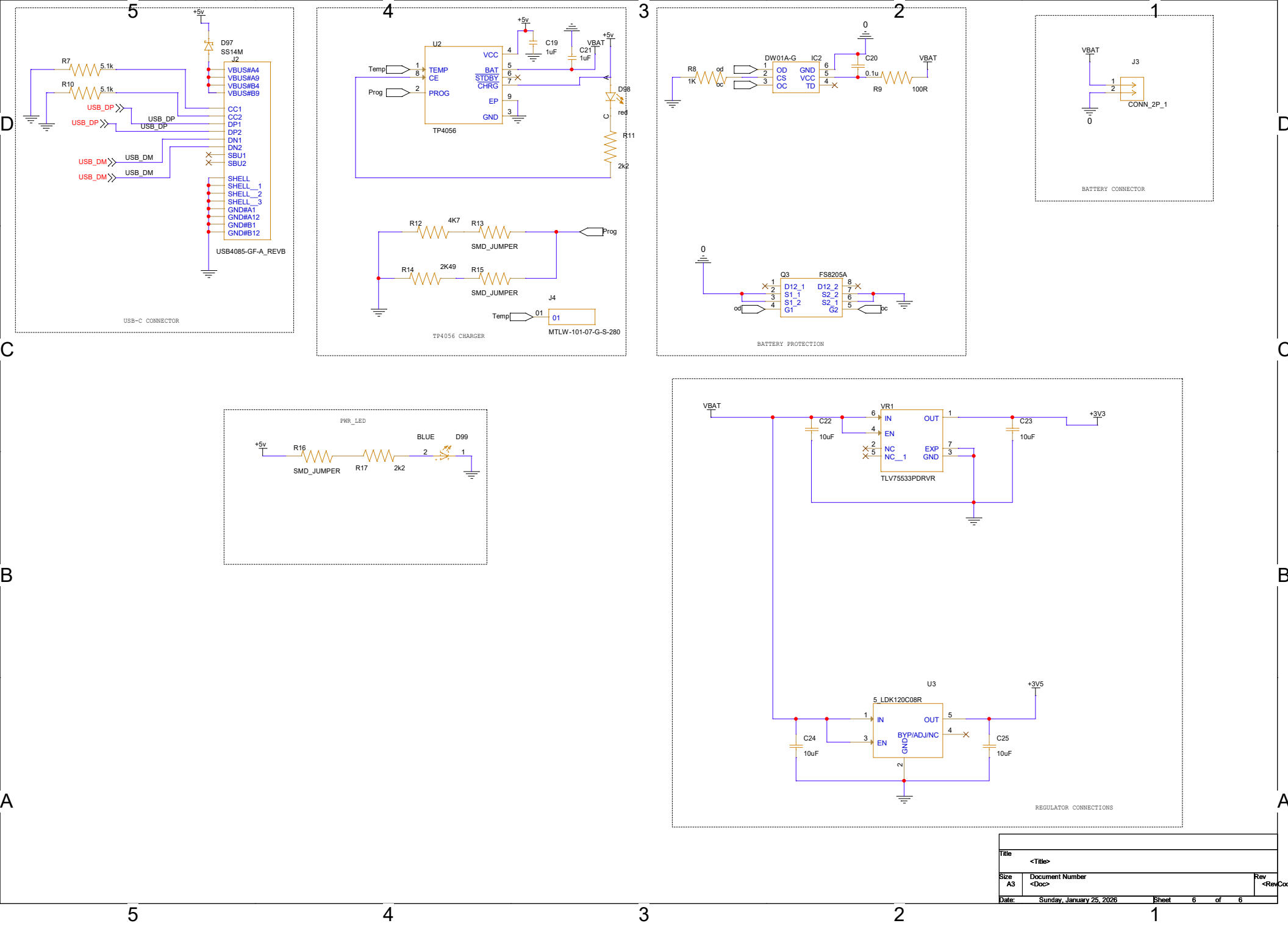

Title	<Title>
Size A3	Document Number <Doc>
Rev	<RevCo
Date: Sunday, January 25, 2026	Sheet 6 of 6