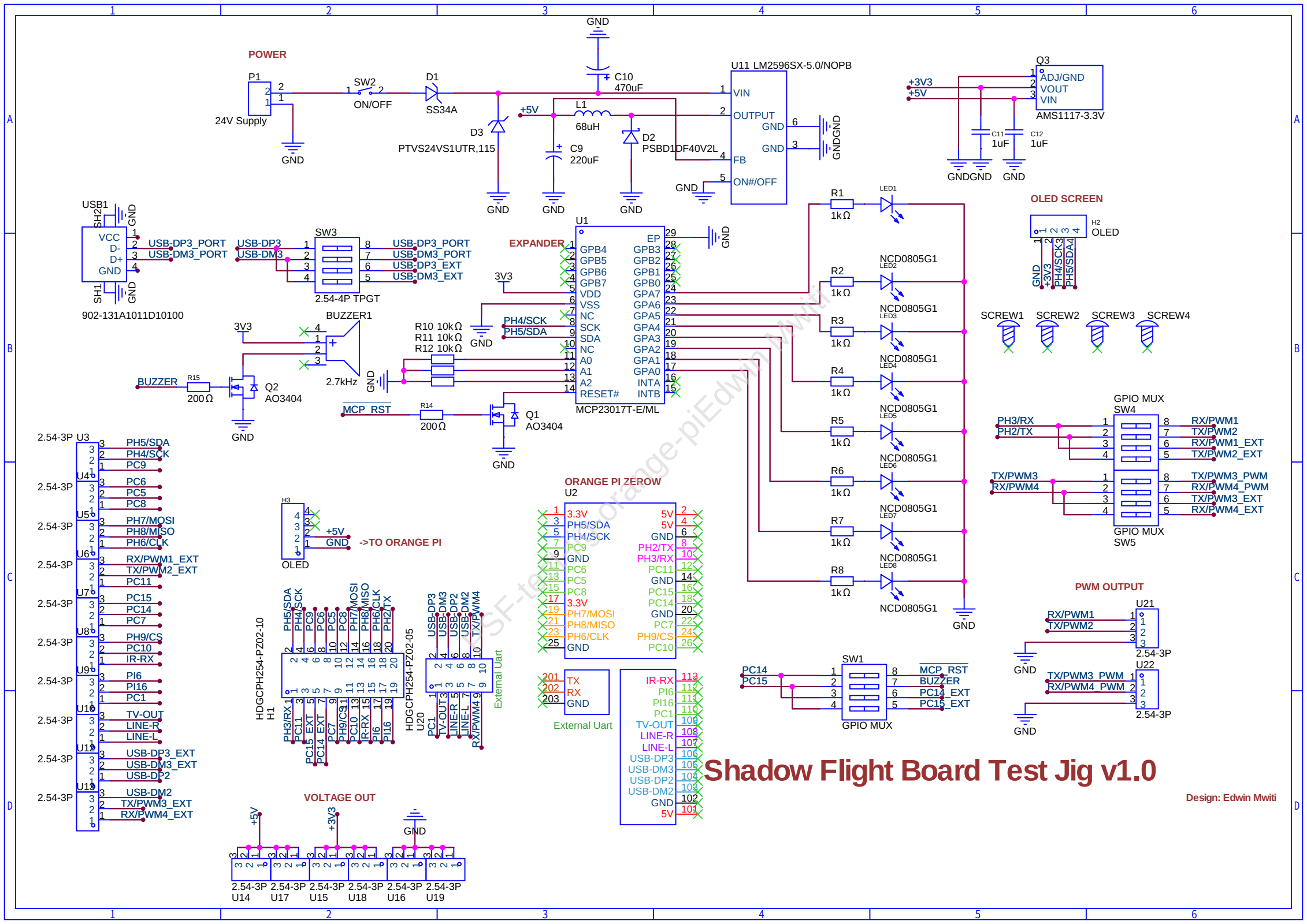

KSF-test-orange-piEdwin Mwiti