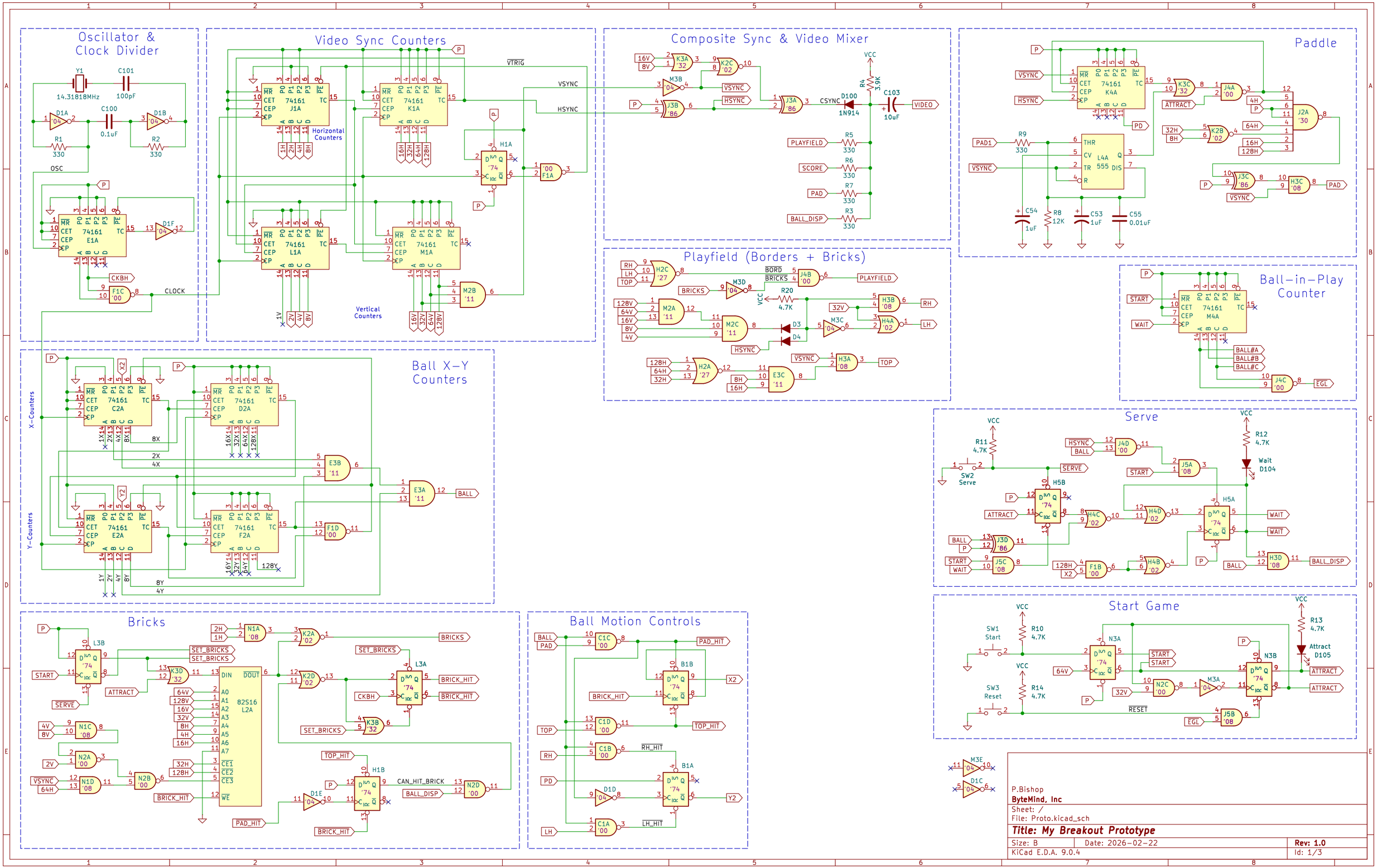
Oscillator & Clock Divider
Video Sync Counters
Composite Sync & Video Mixer
Paddle
Playfield (Borders + Bricks)
Ball-in-Play Counter
Ball X-Y Counters
Serve
Start Game
Bricks
Ball Motion Controls
Horizontal Counters
Vertical Counters
X-Counters
Y-Counters
P.Bishop
ByteMind, Inc
Sheet: /
File: Proto.kicad_sch
Title: My Breakout Prototype
Size: B
Date: 2026-02-22
Rev: 1.0
KiCad E.D.A. 9.0.4
Id: 1/3

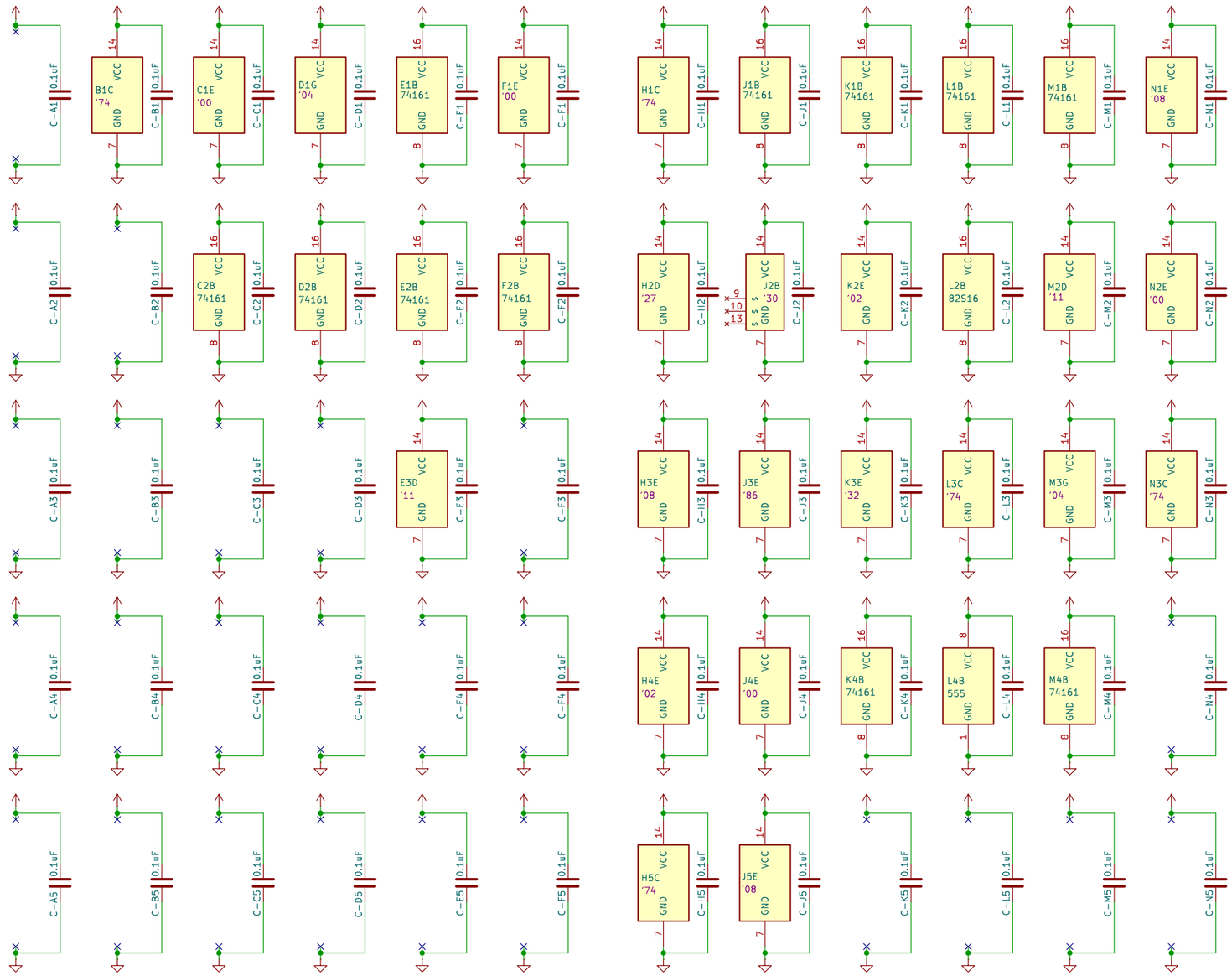

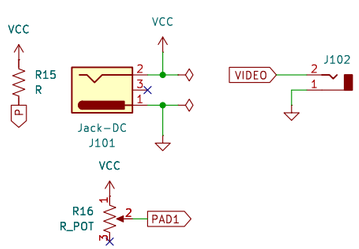

P.Bishop
ByteMind, Inc
Sheet: /Sheet#2/
File: untitled.kicad_sch

Title: My Breakout Prototype

Size: B	Date: 2026-02-22	**Rev: 1.0**
KiCad E.D.A. 9.0.4		Id: 2/3

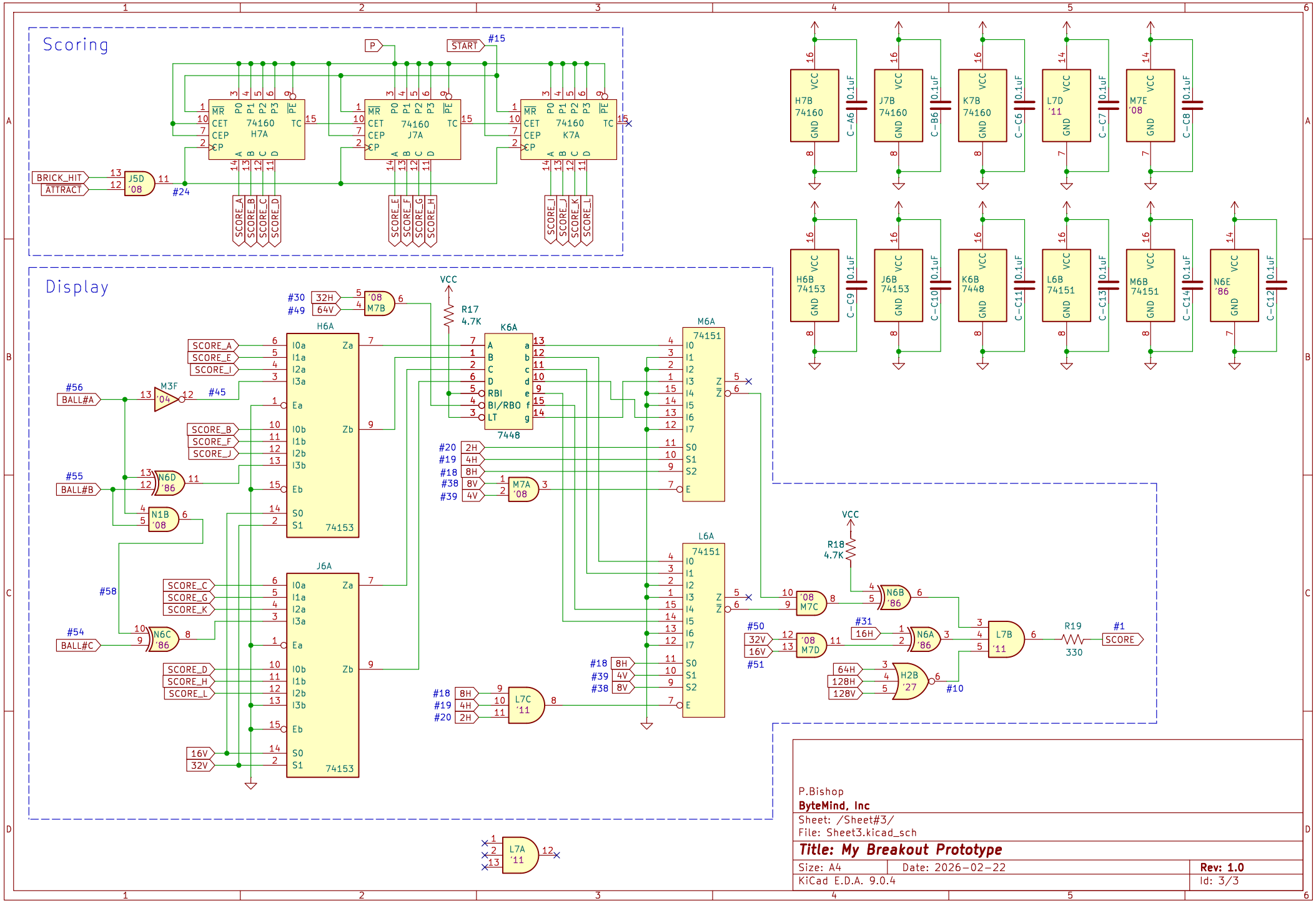

P.Bishop
ByteMind, Inc
Sheet: /Sheet#3/
File: Sheet3.kicad_sch

Title: My Breakout Prototype

Size: A4	Date: 2026-02-22	**Rev: 1.0**
KiCad E.D.A. 9.0.4		Id: 3/3