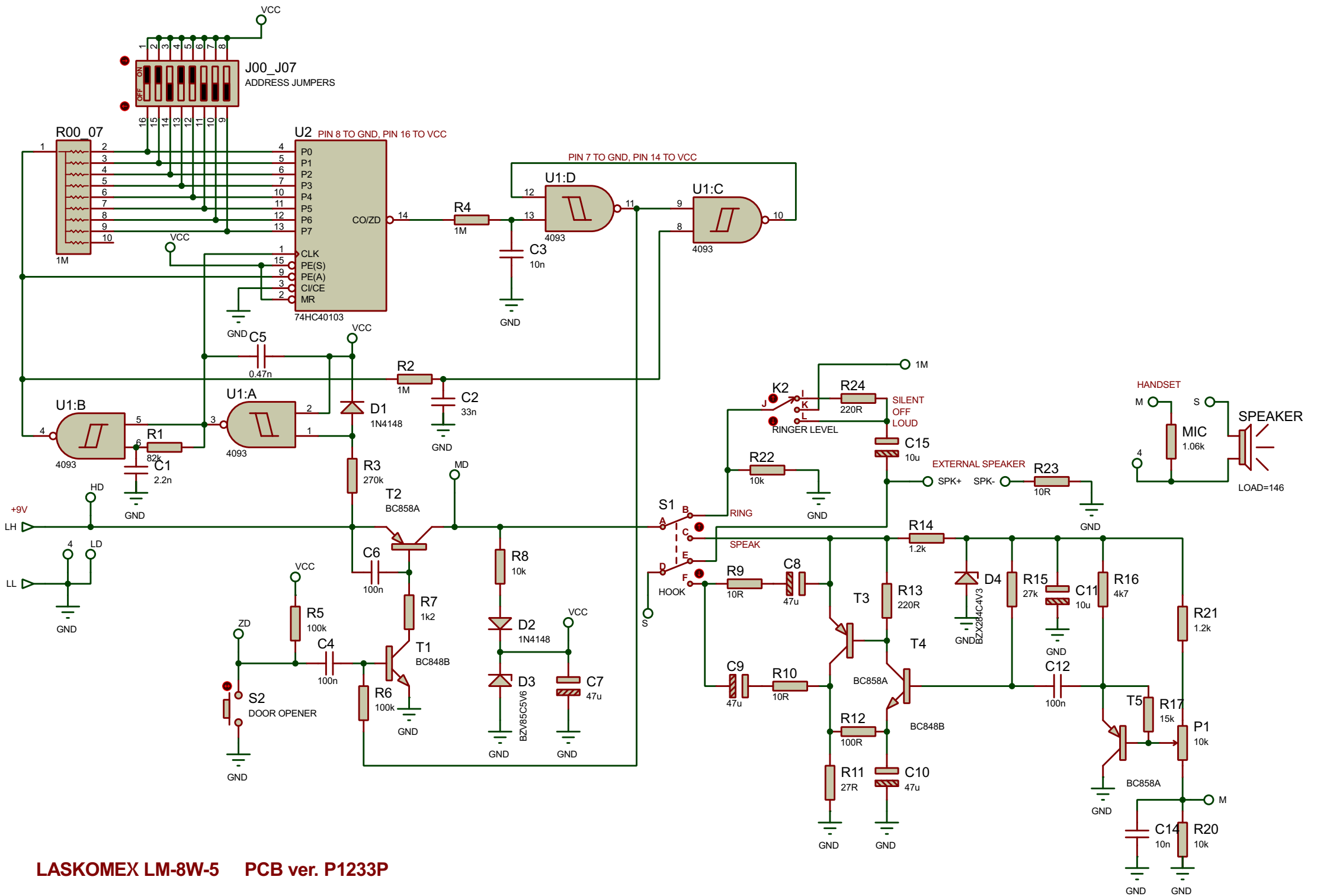

LASKOMEX LM-8W-5 PCB ver. P1233P