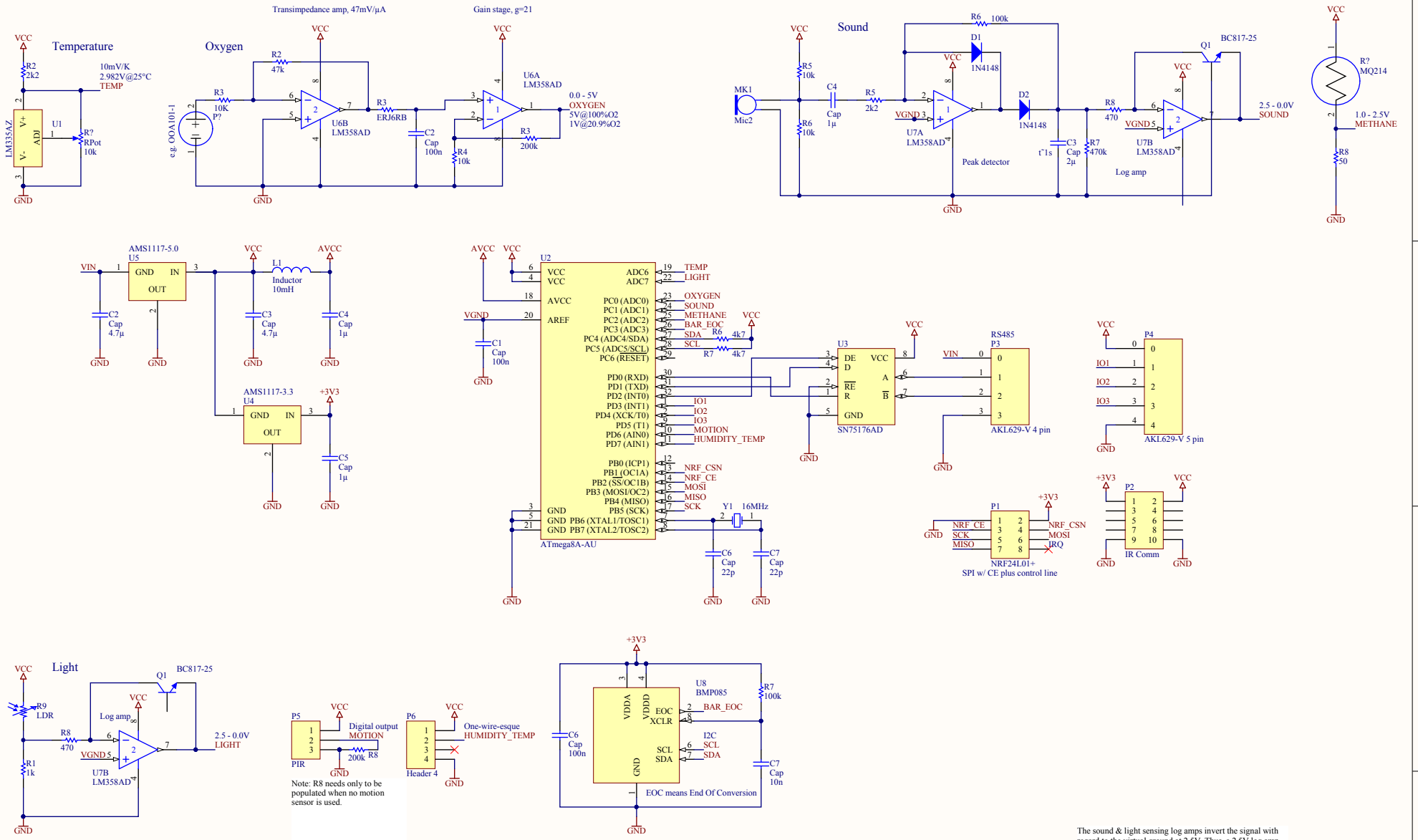
Temperature
VCC
R2
2k2
10mV/K
2.982V@25°C
TEMP
LM335AZ
V+
ADJ
V-
U1
R?
RPot
10k
GND
Oxygen
Transimpedance amp, 47mV/µA
Gain stage, g=21
R2
47k
R3
10K
P?
e.g. OOA101-1
U6B
LM358AD
R3
ERJ6RB
C2
Cap
100n
R4
10k
U6A
LM358AD
R3
200k
0.0 - 5V
OXYGEN
5V@100%O2
1V@20.9%O2
Sound
MK1
Mic2
R5
10k
R6
10k
C4
Cap
1µ
R5
2k2
R6
100k
D1
1N4148
U7A
LM358AD
Peak detector
D2
1N4148
C3
Cap
2µ
t~1s
R7
470k
R8
470
Log amp
U7B
LM358AD
Q1
BC817-25
2.5 - 0.0V
SOUND
R?
MQ214
1.0 - 2.5V
METHANE
R8
50
AMS1117-5.0
U5
GND
IN
OUT
VIN
C2
Cap
4.7µ
L1
Inductor
10mH
C3
Cap
4.7µ
C4
Cap
1µ
AVCC
AMS1117-3.3
U4
+3V3
C5
Cap
1µ
U2
VCC
AVCC
VGND
AREF
C1
Cap
100n
ADC6
ADC7
PC0 (ADC0)
PC1 (ADC1)
PC2 (ADC2)
PC3 (ADC3)
PC4 (ADC4/SDA)
PC5 (ADC5/SCL)
PC6 (RESET)
PD0 (RXD)
PD1 (TXD)
PD2 (INT0)
PD3 (INT1)
PD4 (XCK/T0)
PD5 (T1)
PD6 (AIN0)
PD7 (AIN1)
PB0 (ICP1)
PB1 (OC1A)
PB2 (SS/OC1B)
PB3 (MOSI/OC2)
PB4 (MISO)
PB5 (SCK)
PB6 (XTAL1/TOSC1)
PB7 (XTAL2/TOSC2)
TEMP
LIGHT
OXYGEN
SOUND
METHANE
BAR_EOC
SDA
SCL
R6
4k7
R7
4k7
IO1
IO2
IO3
MOTION
HUMIDITY_TEMP
NRF_CSN
NRF_CE
MOSI
MISO
SCK
Y1
16MHz
C6
Cap
22p
C7
Cap
22p
ATmega8A-AU
U3
DE
D
RE
R
GND
VCC
A
B
SN75176AD
RS485
P3
AKL629-V 4 pin
P4
AKL629-V 5 pin
P1
NRF_CE
SCK
MISO
NRF_CSN
MOSI
IRQ
NRF24L01+
SPI w/ CE plus control line
P2
IR Comm
Light
R9
LDR
R8
470
R1
1k
Log amp
VGND
U7B
LM358AD
Q1
BC817-25
2.5 - 0.0V
LIGHT
P5
PIR
Digital output
MOTION
200k R8
P6
Header 4
One-wire-esque
HUMIDITY_TEMP
Note: R8 needs only to be populated when no motion sensor is used.
U8
BMP085
VDDA
VDDD
EOC
XCLR
SCL
SDA
GND
BAR_EOC
I2C
SCL
SDA
R7
100k
C6
Cap
100n
C7
Cap
10n
EOC means End Of Conversion
The sound & light sensing log amps invert the signal with regard to the virtual ground at 2.5V. Thus, a 2.5V log amp output corresponds to a small input and a 0.0V log amp output corresponds to a large input.
TBD: Resistor values of light and sound log amps
Title
Size
A3
Number
Revision
Date: 3/8/2014
Sheet of
File: C:\Users\..\c-mote.SchDoc
Drawn By: