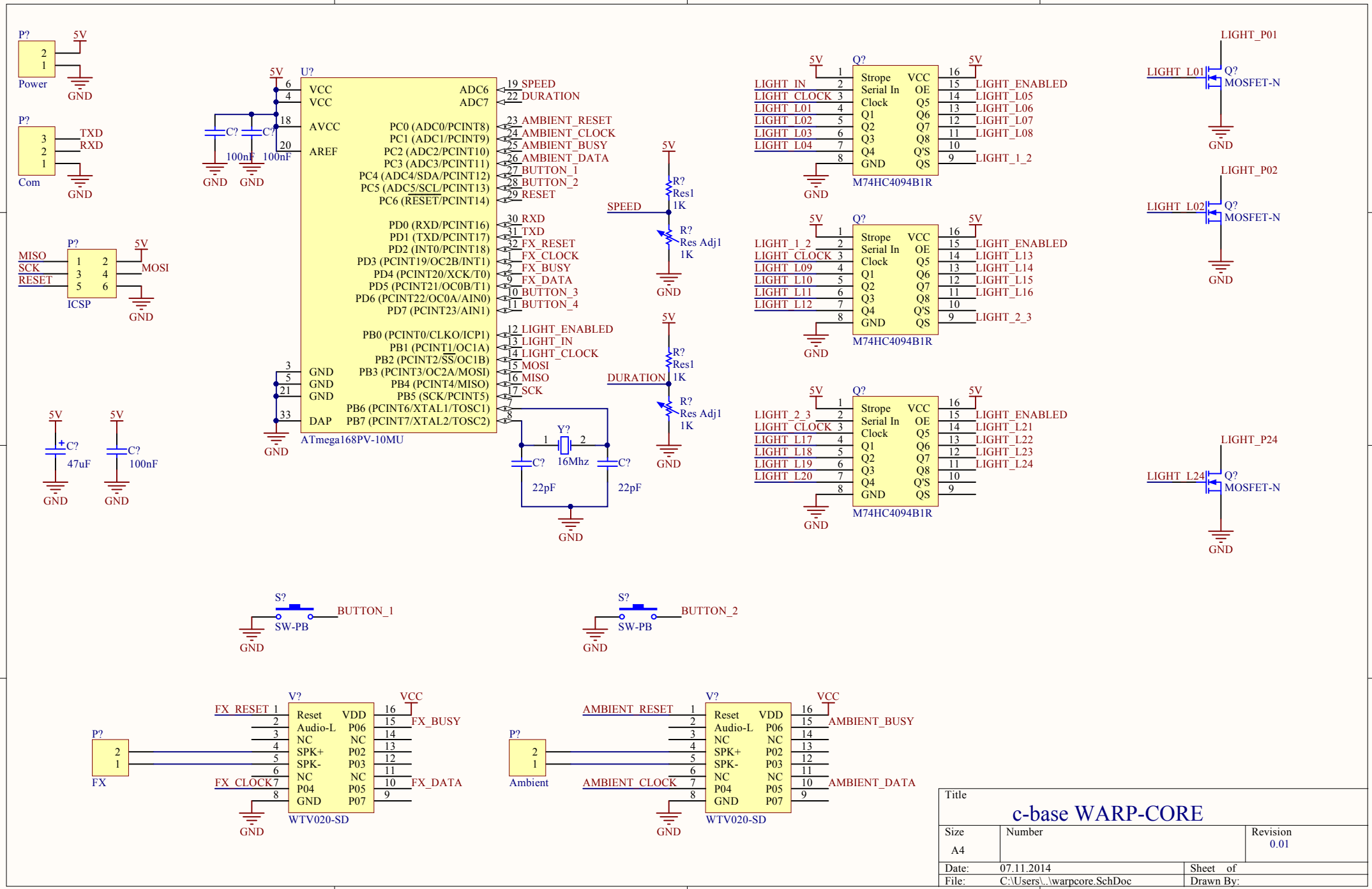

Title		
c-base WARP-CORE		
Size A4	Number	Revision 0.01
Date: 07.11.2014	Sheet of	
File: C:\Users\..\warpcore.SchDoc	Drawn By:	