HEAO SN#03062702 Q
C

Hutzler Lab

Big Sky
Pulsed YAG

-SWITCH BREAKOVER 22J
LAMP ENERGY

LASER SAFETY

PARTS CLEANING/ STORAGE

ESD

PARTS OUTLINE

BIG SKY LASER
TECHNOLOGIES, INC.

Big Sky Laser Technologies

Laser Safety Guide

3/22/00

PO BOX 8100 BOZEMAN MONTANA 59715-2001 PHONE 406/586 0131 FAX 406/586 2924

I. Introduction

The increasingly widespread use of lasers requires more people to become familiar with the potential hazards associated with the misuse of this valuable new product of modern science. Applications exist in many technologies, including material processing, construction, medicine, communications, energy production, and national defense. Of recent importance from a safety consideration, however, is the introduction of laser devices into more consumer-oriented retail products, such as the laser scanning devices, office copy and printing machines, and audio/visual recording devices. Most devices in these markets emit relatively low energy levels and, consequently, are easily engineered for safe use.

II. Laser Hazards

The basic hazards from laser equipment can be categorized as follows:

1. Laser Radiation Hazards

Lasers emit beams of optical radiation. Optical radiation (ultraviolet, visible, and infrared) is termed <u>non-ionizing</u> radiation to distinguish it from <u>ionizing</u> radiation such as X-rays and gamma rays, which are known to cause different biological effects.

a. Eye hazards

Corneal and retinal burns (or both), depending upon laser wavelength, are possible from acute exposure; and corneal or lenticular opacities (cataracts), or retinal injury may be possible from chronic exposure to excessive levels.

b. Skin hazards

Skin burns are possible from acute exposure to high levels of optical radiation. At some *specific ultraviolet* wavelengths, skin carcinogenesis may occur.

2. Chemical Hazards

Some materials used in lasers (i.e. excimer, dye, and chemical lasers) may be hazardous and/or contain toxic substances. In addition, laser induced reactions can release hazardous particulate and gaseous products.

3. Electrical Hazards

Lethal electrical hazards may be present in all lasers, particularly in high-power laser systems.

4. Other Secondary Hazards

These include:

- cryogenic coolant hazards
- excessive noise from very high energy lasers
- X radiation from faulty high-voltage (> 15 kV) power supplies

STORAGE

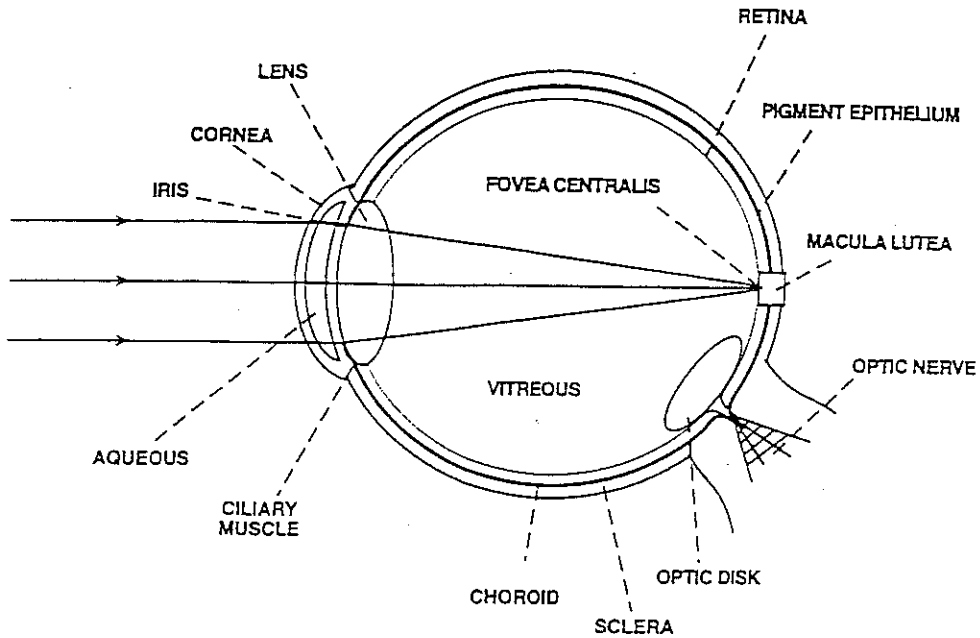

Figure 1 - Schematic diagram of the human eye showing structures of interest. Parallel rays of light can be focused to a very small area on the retina when the eye is relaxed.

- explosions from faulty optical pumps and lamps
- fire hazards

III. Eye Hazards

The ocular hazards represent a potential for injury to several different structures of the eye. This is generally dependent on which structure absorbs the most radiant energy per volume of tissue. Retinal effects are possible when the laser emission wavelength occurs in the visible and near-infrared spectral regions (0.4 to 1.4 μm). Light directly from the laser or from a specular (mirror-like) reflection entering the eye at these wavelengths can be focused to an extremely small image on the retina. The incidental corneal irradiance (or radiant exposure) will be increased approximately 100,000 times at the retina due to the focusing effects of the cornea and lens (Fig. 1).

Laser emissions in the ultraviolet and far-infrared spectral regions (outside 0.4 to 1.4 μm) produce ocular effects primarily at the cornea. However, laser radiation at certain wavelengths may reach the lens and cause damage to that structure.

1. Optical Radiation Hazards

Effects of optical radiation at various wavelengths on various structures of the eye are shown in Figure 2. Actinic-ultraviolet, at wavelengths of 180 to 315 nanometers, is absorbed at the cornea. These wavelengths are responsible for "welder's flash" or photokeratitis. Actinic-ultraviolet radiation also produces "sunburn" or erythema of the skin. Near-ultraviolet (UV-A) radiation between 315 and 400 nm is absorbed in the lens and may contribute to certain forms of cataracts. At high irradiances, these wavelengths also produce "long-wave" erythema of the skin and photokeratitis.

Radiation at visible wavelengths, 400 to 780 nm, and near-infrared wavelengths, 780 to 1400 nm, is transmitted through the ocular media with little loss of intensity and is focused to a spot on the retina 10 to 20 micrometers in diameter. Such focusing can cause intensities high enough to damage the retina. For this reason, laser radiation in the 400 to 1400 nm (0.4 - 1.4 μm) range is termed the *retinal hazard region.* Wavelengths between 400 and 550 nm are particularly hazardous for long-term retinal exposures or exposures lasting for minutes or hours. This is sometimes referred to as the *blue light hazard.*

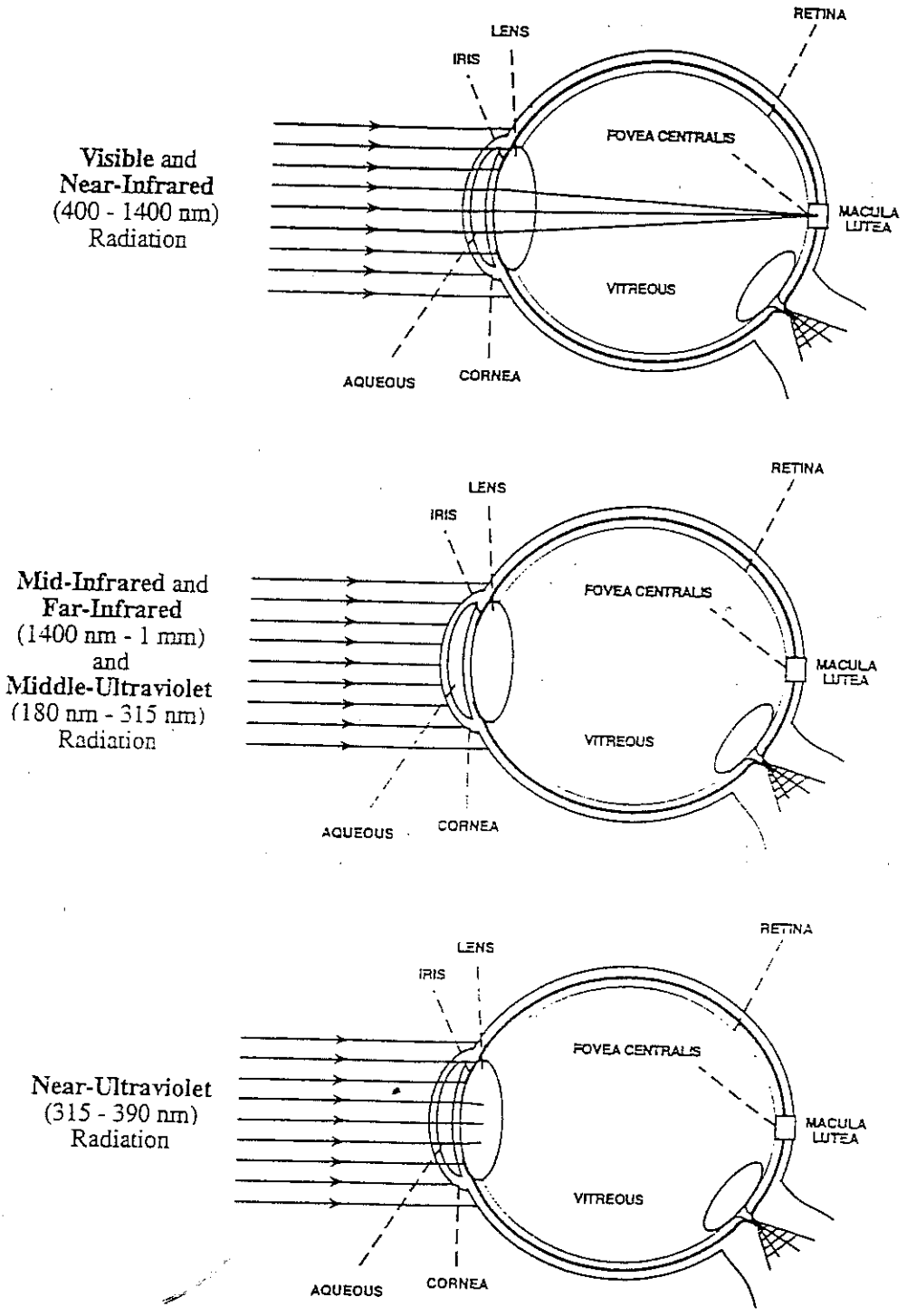

Figure 2 - Absorption sites of (a) visible and near infrared radiation; (b) middle, far-infrared radiation and middle ultraviolet radiation; (c) and near-ultraviolet radiation.

Far-infrared (IR-C) radiation with wavelengths of 3 μm to 1 millimeter is absorbed in the front surface of the eye. However, some middle-infrared (IR-B) radiation between 1.4 and 3 μm penetrates deeper and may contribute to "glass-blower's cataract." Extensive exposure to near-infrared (IR-A) radiation may also contribute to such cataracts.

The localization of injury is always the result of strong absorption in the specific tissue for the particular wavelength.

IV. Skin Hazards

From a safety standpoint, skin effects have been usually considered of secondary importance. However, with the more widespread use of lasers emitting in the ultraviolet spectral region as well as higher power lasers, skin effects have assumed greater importance.

Erythema (sunburn), skin cancer and accelerated skin aging are possible in the 230 to 380 nm wavelength range (.23 to .38 μm - Actinic ultraviolet). The most severe effects occur in the UV-B (280 nm - 315 nm). Increased pigmentation can result following chronic exposures in the 280 to 400 nm wavelength range. In addition, photosensitive reactions are possible in the 310 to 400 nm (Near-ultraviolet) and 400 to 600 nm (Visible) wavelength regions. The bioeffects in the 700 to 1000 nm (Infrared) will be skin burns and excessive dry skin.

V. Associated Hazards From High Power Lasers

Some applications of high-power lasers, especially in materials processing, can give rise to respiratory hazards. Laser welding, cutting, and drilling procedures can create potentially hazardous fumes and vapors. Fortunately, the same localized and general ventilation procedures developed for similar conventional operations apply to this type of laser application.

The most lethal hazards associated with the laser involves electricity. There have been several fatal accidents associated with lasers due to electrocution in the United States. These occurred when commonly accepted safety procedures were not followed when individuals were working with dangerous, high-voltage components of a laser system. Proper electrical hazards controls should be used at all times when working with laser systems.

Fire hazards may exist with some high-power laser devices, normally those with continuous-wave (CW) lasers having an output power above one-half watt. Another hazard sometimes associated with high-power laser systems involves the use of cryogenic coolants used in the laser system. Skin contact can cause burns, improper plumbing can cause explosions, and insufficient ventilation can result in the displacement of oxygen in the air by the liquefied gas vaporizing (most commonly nitrogen). Cryogenic hazards are normally, but not exclusively, limited to research laboratories.

Noise hazards are rarely present in laser operations. However, the firing of very high-power pulsed lasers can generate an impulse noise that may exceed permissible levels (140 dB). This problem is more commonly associated with transversely-excited-atmospheric (TEA) lasers and special lasers using MARX-Bank discharge systems. These are used to generate very high peak-power levels in the far-infrared region of the spectrum.

VI. Laser Safety Standards and Hazard Classifications

The basic approach of virtually all laser safety standards has been to classify lasers by their hazard potential, which is based upon their optical emission. The next step is to specify control measures which are commensurate with the relative hazard classification. In other words, the laser is classified based upon the hazard it presents, and for each classification a standard set of control measures applies. In this manner, unnecessary restrictions are not placed on the use of many lasers which are engineered to assure safety.

This philosophy has given rise to a number of specific classification schemes such as the one employed in the American National Standards Institute's (ANSI) Z136.1 Safe Use of Lasers (1993) standard. This standard was developed by the accredited standards committee Z136, and the Laser Institute of America is the secretariat. This standard has been used as a source by many organizations including the Occupational Health and Safety Agency (OSHA) and the American Conference of Governmental Industrial Hygienists (ACGIH) in developing their laser safety guidelines.

The ANSI scheme has four hazard classifications. The classification is based upon the beam output power or energy from the laser (emission) if it is used by itself. If the laser is a component within a laser system where the raw beam does not leave the enclosure, but instead a modified beam is emitted, the modified beam is normally used for classification. Basically, the classification scheme is used to describe the capability of the laser or laser system to produce injury to personnel. The higher the classification number, the greater the potential hazard. Brief descriptions of each class are as follows:

Class 1 denotes lasers or laser systems that do not. under normal operating conditions, pose a hazard.

Class 2a denotes low-power visible lasers or laser systems that are not intended for prolonged viewing. and under normal operating conditions will not produce a hazard if the beam is viewed directly for periods not exceeding 1000 seconds.

Class 2 denotes low-power visible lasers or laser systems which, because of the normal human aversion response (i.e. blinking, eye movement, etc.), do not normally present a hazard, but may present some potential for hazard if viewed directly for extended periods of time (like many conventional light sources).

Class 3a denotes some lasers or laser systems having a CAUTION label that normally would not injure the eye if viewed for only momentary periods (within the aversion response period) with the unaided eye, but may present a

greater hazard if viewed using collecting optics. Another group of Class 3a lasers have DANGER labels and are capable of exceeding permissible exposure levels for the eye in 0.25s and still pose a low risk of injury.

Class 3b denotes lasers or laser systems that can produce a hazard if viewed directly. This includes intrabeam viewing of specular reflections. Normally, Class 3b lasers will not produce a hazardous diffuse reflection.

Class 4 denotes lasers or laser systems that produce a hazard not only from direct or specular reflections, but may also produce hazardous diffuse reflections. Such lasers may produce significant skin hazards as well as fire hazards.

Although the process of laser hazard evaluation does not rely entirely on the laser classification, the laser classification must be known. If the laser classification has not been provided by the manufacturer (as required by Federal law since August 1976), the class can be determined by measurement and/or calculation.

Since the relative hazard of a laser may also vary depending upon use and/or environmental effects (as in the case of long-distance outdoor applications such as ranging), measurements and/or calculations may be necessary to determine the degree of hazard in such cases.

The term "limiting aperture" is often used when discussing laser classification. Limiting aperture is defined as the maximum circular area over which radiance and radiant exposure can be averaged. It is a function of wavelength region and use.

In the ANSI classification system, the user or the Laser Safety Officer uses his judgement to establish the longest reasonable possible exposure duration for a CW or repetitively pulsed laser. This is called the classification duration (t_{max}), which cannot exceed an eight hour day, which equals 3×10^4 seconds.

Any completely enclosed laser is classified as a Class 1 laser if emissions from the enclosure can not exceed the MPE values under any conditions inherent in the laser design. During service procedures, however, the appropriate control measures are temporarily required for the class of laser contained within the enclosure.

A Federal government safety standard for laser products, which regulates laser manufacturers, was developed by the Department of Health and Human Sevices, Center for Devices and Radiological Health. The basic law under which the Center for Devices and Radiological Health (CDRH) has regulatory authority over lasers is Radiation Control for Health and Safety Act of 1969 (PL-90-602). The act empowered CDRH to set standards of performance for electronic products that emit radiation. This same public law applies to X-ray machines, televisions, lasers, microwave ovens, etc.

Nd:YAG

Neodymium: Yttrium Aluminum Garnet - Nd:YAG

Man-made crystal. The next hardest crystal compared to diamond

Fundamental lasing wavelength: 1064 nm (nanometers – $1x10^{-9}$ m) [1.06 μm (microns – $1x10^{-6}$ m)]

Nd:YAG will lase at other wavelengths but 1064 nm is the most dominant.

Typical BSLT configuration is flashlamp-pumped in a flat/flat resonator and is Q-switched.

Rear mirror (HR) is 99.9+% reflective at 1.06μm

Front / output mirror / output coupler (OC) is typically 10% reflective at 1.06μm

LASER SAFETY

DANGER

INVISIBLE LASER RADIATION

The Model CFR200 Nd:YAG Laser System is a Class IV laser. Its output beam is, by definition, a safety and fire hazard. Precautions must be taken to prevent accidental exposure to both direct and reflected beams.

<u>Precautions for Safe Operation of Class IV Lasers</u>

1. Keep the protective covers on the Laser Head at all times. Do not operate the laser with the covers removed for any reason.

2. Avoid looking at the laser output beam.

3. Do not wear reflective jewelry while using the laser, as it might cause inadvertent hazardous reflections.

4. Use protective eyewear at all times. Consult the ANSI, ACGIH, or OSHA standards listed at the end of this section for guidance on goggles and safety matters.

5. Operate the laser at the lowest possible beam intensity, given the requirements of the intended application.

6. Increase the beam diameter wherever possible to reduce beam intensity and thus reduce the hazard.

7. Avoid blocking the laser beam with any part of the body.

8. Use an IR detector or energy detector to verify that the laser beam is off before working in front of the laser.

9. Establish a controlled access area for laser operation. Limit access to those trained in the principles of laser safety.

10. Maintain a high ambient light level in the laser operation area so the eye pupil remains constricted, thus reducing the possibility of hazardous exposure.

11. Post prominent warning signs near the laser operation area.

12. Provide enclosures for the beam path whenever possible.

13. Set up an energy absorber to capture the laser beam, preventing unnecessary reflections or scattering.

Caution: Use of controls or adjustments, or performance of procedures other than those specified in this User's Manual may result in hazardous radiation exposure.

Follow the instructions within this manual carefully to ensure the safe operation of your laser. At all times during laser operation, maintenance or servicing, avoid unnecessary exposure to laser or collateral radiation that exceeds the accessible emission limits listed in "Performance Standards for Laser Products," United States Code of Federal Regulations, 21 CFR 1040.10(d).

84980029 B

VISIBLE AND INVISIBLE LASER RADIATION AVOID EYE OR SKIN EXPOSURE TO DIRECT OR SCATTERED RADIATION

1574 nm	4 nsec	15 mJ
1064 nm	6 nsec	75 mJ
532 nm	6 nsec	45 mJ
355 nm	5 nsec	20 mJ
266 nm	5 nsec	15 mJ

CLASS 4 LASER PRODUCT COMPLIES WITH 21 CFR 1040.10 / EN 60825-1 : 1994

Warning Logotype
Ultra

DANGER

LASER RADIATION— AVOID EYE OR SKIN EXPOSURE TO DIRECT OR SCATTERED RADIATION

CLASS IV LASER PRODUCT

Warning Logotype
Generic

DANGER

VISIBLE AND INVISIBLE LASER RADIATION AVOID EYE OR SKIN EXPOSURE TO DIRECT OR SCATTERED RADIATION

1574 nm	6 nsec	50 mJ
1064 nm	8 nsec	250 mJ
532 nm	8 nsec	150 mJ
355 nm	6 nsec	75 mJ
266 nm	6 nsec	50 mJ

CLASS IV LASER PRODUCT

Warning Logotype
CFR200

84980036 A

BIG SKY LASER TECHNOLOGIES, INC.

P.O. Box 8100 • Bozeman, MT 59715 USA

Model:
Part Number:
Serial Number:
Manufactured:

Complies with US 21 CFR 1040.10
Class IV Laser

Orrgination Label

DANGER

VISIBLE AND INVISIBLE LASER RADIATION AVOID EYE OR SKIN EXPOSURE TO DIRECT OR SCATTERED RADIATION

1574 nm	6 nsec	100 mJ
1064 nm	8 nsec	500 mJ
532 nm	8 nsec	300 mJ
355 nm	8 nsec	150 mJ
266 nm	8 nsec	75 mJ

CLASS IV LASER PRODUCT

Warning Logotype
CFR400

CAUTION

LASER RADIATION WHEN OPEN AVOID EYE OR SKIN EXPOSURE TO DIRECT OR SCATTERED RADIATION HIGH VOLTAGE HAZARD MAY EXIST WITH COVER REMOVED

84980048 A

Protective Housing Label

84980083 A

VISIBLE AND INVISIBLE LASER RADIATION AVOID EYE OR SKIN EXPOSURE TO DIRECT OR SCATTERED RADIATION

1574 nm	6 nsec	300 mJ
1064 nm	7 nsec	1000 mJ
532 nm	6 nsec	600 mJ
355 nm	5 nsec	200 mJ
266 nm	5 nsec	150 mJ

CLASS 4 LASER PRODUCT COMPLIES WITH 21 CFR 1040.10 / EN 60825-1 : 1994

Warning Logotype
CFR800

LASER APERTURE

Aperture Label

Extract of Parts Cleaning and Storage Procedure

General Guidelines:

Component cleanliness requirements vary by application. A general guideline is defined in this procedure. However, variances to cleaning procedures may be permitted as specified by assembly instructions for a given sub-assembly.

Required Materials:

Acetone: JT Baker HPLC Reagent Grade Acetone (JT Baker PN: 9002-02) or equivalent.

Methanol: JT Baker HPLC Reagent Grade Methanol (JT Baker PN: 9093-02) or equivalent.

Dry Nitrogen (Ultra High Purity/Water Free) OR EXTRA DRY (cost issue)

Distilled water: Bottled distilled water, de-ionized water or equivalent

Finger Cots: Calapro powder free cots (Calapro PN: FY01) or equivalent.

Lint Free Towel: Manufactured by Coventry Clean Room Products (PN: 6709 Type E Lono) or equivalent.

Lens Tissue: Manufactured by Star Paper Company (PN A-A 50177, Fed Spec # NNN-P-40B, Type 1, Class 1)

Laser Damage Basics:

- Cleanliness of optics is paramount if an optic is to withstand the fluences of a laser system.
- Scratches and digs outside the lasing aperture do not affect the laser beam or optics performance and can be disregarded. Scratches in general are considered negligible on AR surfaces unless they are excessively large or become contaminated. A small clean scratch is not a problem on an AR surface. A very large scratch may affect the beam. To determine lasing aperture size, refer to optics specifications.
- Metallic particles on any coated surface that will be exposed to laser radiation are a primary cause for laser damage.
- $LiNbO_3$, (q-switch crystals) have the lowest damage threshold of any optic in a BSLT laser resonator. Extreme care should be used when cleaning this optic to keep any debris off its AR faces. Take care that no gold "flakes" from the gold electrodes get on the AR faces.
- In general, HR coatings have a lower damage threshold than do AR coated surfaces. Damage to HR and partially reflective surfaces will propagate to cover the beam footprint over time. AR damage does not propagate.

*****Optics are divided into two separate categories,** low cost and high cost optics.

High cost optics include the following items: laser rods (all types) and all NLO's (including, but not limited to $LiNbO_3$ (q-switch crystal), and KTP). After cleaning, all high cost optics should be inspected with a 3X or 4X eye loupe and a high intensity light source. Optics should be free of dirt and imperfections.

Low cost optics include: wedges; fold prisms; partial reflectors (output couplers); high reflectors (45° and normal incidence); dichroics; windows and lenses. Low cost optics should be inspected using ordinary fluorescent lighting and the unaided eye. The fluorescent light used in standard laminar flow booths is fine for such inspection. Imperfections that cannot be seen with the naked eye are deemed too small to be of any consequence.

Special case:

Waveplates: Some waveplates tend to have imperfect surfaces with many scatter sites. This is common and is not considered to be reason for rejection.

Dichroics: Dichroics (beamsplitters) will also have a mottled surface; this is normal and will not affect performance.

Optics Cleaning Procedure:

All optics handling must be done by trained personnel using the following procedures:

NOTE: OPTICS SURFACES ON WHICH LASER RADIATION WILL BE INCIDENT, SHOULD NEVER BE TOUCHED, WITH OR WITHOUT FINGER COTS. Place finger cots on all fingers that may be in contact with any optical surface. Change finger cots as needed to avoid contamination of optics. Never re-use finger cots. 20 MIN TIME FRAME

Visual inspection is the key step. After removing the optic from the **shipping** container, visually inspect for any scratches, chips, or coating defects. If the optical surface quality is questionable return the optic to discrepant materials for evaluation. Scratch/Dig specifications for each optic are available and shall be referenced if the optic surface quality is questionable. Visually inspect optic after **EVERY** cleaning operation.

Blow Nitrogen on optic to remove any loose foreign matter. Use small blasts of nitrogen, as static charges will be built up on the optic, which will tend to attract more particles.

Inspect again. If it is a low cost optic, and all appears to be clean, the optic can be used at this point without further cleaning.

Wipe bevels and edges of optic. Wipe the bevels and edges with a lens tissue wetted with both acetone and methanol. Wiping optic bevels and edges will reduce the chance of picking up foreign particles and scratching the optic when wiping the polished surface.

Folded tissue wipe (see below). Wipe the critical optical surface with a lens tissue and a drop of both acetone and methanol. If solvent or water residue spots remain, additional wipes may be required to remove the deposits.

Water residues must be removed with distilled water. If residues do not clean off with solvent, they may be water spots. Wipe with a lint-free wipe wetted with distilled or de-ionized water. Visually inspect after each wipe. When water residue has been removed, follow with a folded tissue wipe with acetone and methanol.

Folded tissue wipe procedure. A small set of hemostats and lens tissue is required to perform a folded tissue wipe. Start with a small piece of lens tissue folded such that the edges of the tissue are tucked inside and are not exposed. Also take care not to touch where the final tissue will come in contact with the optic being cleaned. Fold the tissue such that is just slightly wider than the optic being cleaned. This assures you have adequate tissue to clean the whole surface. Use the hemostats to apply (with a light pressure) a single uniform wipe across the optic surface and dispose of the lens tissue. **Tissue should be used only once.**

Special Optics cleaning:

Concave Optics

Concave optics (High power negative lenses): Do not drag wipe. Residues will remain in recessed area. Dry nitrogen dust only. If additional cleaning is required, use a folded tissue wipe.

Air Space Cube Polarizers

Air space cube polarizers: Do not allow solvents or water to get into air space when cleaning.

Flashlamps

Flashlamps should be wiped down with a lint free towel and acetone or methanol. Both glass envelope and electrodes may be cleaned using this procedure.

NOTE: If cleaned in this manner, the cathode electrode must be re-coated with Nyogel afterwards to maintain its lubrication and resistance to corrosion.

Bonded Optics

Bonded optics are difficult to clean once bonded to a mechanical component. Handle carefully while bonding to avoid contamination of optical surfaces. Re-inspect, and avoid bonded areas, if cleaning is required.

Mounted Optical Surfaces

Mounted optical surfaces: Mounted optics are often very difficult to access and clean. Q-tips wrapped in lens tissue with acetone and methanol may be used. Avoid cleaning if possible.

Cleaning Mechanical Parts

On occasion it will be necessary to clean the mechanical parts on subassemblies. The following guidelines should be followed. Care should be taken when working around optics, especially when bonded in subassemblies. **It is strongly recommended that subassemblies NOT be disassembled for cleaning.**

Anodized Aluminum

Subassembly parts made from anodizes aluminum may be wiped down with a lint-free wipe wetted with methanol. Avoid wiping near optics to keep contamination away from optical surfaces.

Stainless Steel

Wipe with a lint-free wipe wetted with acetone or methanol. Be aware that acetone can damage plastic parts or those made from plastics. Avoid wiping near optics to avoid contamination.

Plastics

Plastic parts include, but are not limited to parts manufactured from ultem, delrin (nylon), teflon, and Polypropylene. Plastic parts shall be cleaned using the following procedures. **Do not wipe or soak in acetone.** A light wipe-down with methanol is acceptable if necessary. Do not soak in methanol.

O-Rings

Wipe down with lint-free towel wetted with methanol. Do not use acetone. Do not soak in methanol. Do not ultrasonically clean o-rings.

Macor

Macor apertures and beam blocks must be ultrasonically cleaned in clean acetone. Place apertures in a beaker submerged in acetone and ultrasonic cleaner for 5 minutes. Rinse with clean acetone and repeat cycle. Do not use the heater when cleaning with acetone in the ultrasonic cleaner.

Seal Screws

Seal screws are mounting hardware that are supplied with o-rings. Seal screws shall be rinsed briefly with methanol, rinsed with water and air-dried prior to storage.

General hardware

Stainless steel hardware can be washed in an ultrasound cleaner in a beaker with sufficient acetone to cover the parts. **Care must be used when using acetone in an ultrasonic cleaner; keep the beaker covered at all times and do not use heat.**

Plastic screws may be rinsed in methanol before re-use. Do not soak in methanol.

Cleaning Electrical Components

Any electrical assembly may be wiped down with a lint-free cloth wetted with methanol. Assemblies may be dried with a heat gun or blow-dryer to drive off any volatiles. Electrical components in the power supplies do not need to meet the same standards of cleanliness as those in the laser heads; however, if repairs are made to the CCA's, they must be thoroughly cleaned to prevent corrosion.

Inspection of Clean Parts

Inspection of all materials after cleaning is required. A visual inspection of mechanical parts, hardware and electrical parts is acceptable. If parts appear to be contaminated in any way, repeat the cleaning procedure. Always inspect the cleaning solution. If the solution appears cloudy or dirty, indicating that contamination is still being removed from the component being cleaned, repeat the cleaning procedure. Also inspect wipes used to clean parts; if any residue is left on the wipe, this could indicate the part needs further cleaning.

Packaging and Storage of Clean Assemblies

Optical Assemblies to be stored or transported must be wrapped and stored as provided below:

- Handle clean optical assemblies with finger cots only.
- Visually inspect assembly again to make sure optical damage has not occurred during cleaning. Visually inspect for contamination that may have occurred during handling. Handle very carefully; optics mounted in assemblies are very difficult to clean.
- Wrap in lint-free lens tissue. Wrap again in lint-free towel.
- Place in a clean, resealable, plastic bag and seal. Do not re-use bags.

Mechanical Assemblies

- Handle clean mechanical assemblies with finger cots only.
- Visually inspect mechanical assembly for contamination that may have occurred during handling.
- Parts with a critical surface finish must be wrapped in a lint-free towel prior to bagging.
- Carefully place mechanical parts in a clean, resealable, plastic bag for storage. Do not re-use bags. Metal parts will scratch easily. Handle with care.

Electrical Assemblies

- Handle clean electrical assemblies with finger cots only.
- Visually inspect electrical assembly for contamination that may have occurred during handling.
- Parts with a critical surface finish must be wrapped in a lint-free towel prior to bagging.
- Carefully place electrical assemblies in a clean, resealable, plastic bag for storage. Do not re-use bags.

1. Definitions

1.1 Anti-static: A material that resists triboelectric charging and produces minimal static charge when rubbed against itself or another material. A material's anti-static property is not necessarily correlated with its resistivity, and can be affected by factors such as age, wear, contamination, solvents and climate.

1.2 ESD Sensitive (ESDS): A part, assembly or product that can be degraded or damaged by ESD. Reported susceptibility ranges of certain electronic devices can start at 50-300 volts, depending on the device.

1.3 Triboelectricity: The transfer of surface charge by contact and separation of two surfaces. This charging by "rubbing" is the most common source of static charge.

1.4 Conductive Material: Material that easily transfers an electrical charge within itself. Surface resistivity is less than 105 ohms per square.

1.5 Dissipative Material: Material that will transfer a charge within itself. Surface resistivity is between 105 and 109 ohms per square.

1.6 Electrostatic Discharge (ESD): A transfer of electrostatic charge (electrons) between two bodies of different voltage potential caused by direct contact or close proximity.

1.7 Grounded: Used to denote an electrical path to utility ground. A static charge (+ or -) that is grounded will become neutral.

1.8 Insulative Material: Material that does not readily transfer a charge within itself. Surface resistivity is more than 1012 ohms per square.

1.9 Static Resistive Material: Material that minimizes the generation of static charge when rubbed against or separated from itself or other materials. Cardboard, paper, and cotton are examples.

Note: Surface resistivity is not defined here.

2. Reducing Static Generators in Manufacturing Areas

2.1 Manufacturing uses the following guidelines to prevent static generation.

2.1.1 Prohibit plastic items such as cups, personal radios, foam packaging, common plastic parts bins, plastic tool boxes, fans, or vinyl note books from coming in direct contact with unprotected ESDS parts or assemblies.

2.1.2 Keep plastics and other insulative material at least 18 inches away from ESDS components and assemblies.

2.1.3 Do not allow paper assembly documents to touch ESD components or assemblies. Note: Paper assembly documents are acceptable at the workstation.

2.1.4 Ensure that all operators handling ESDS devices are grounded with a wrist strap that is in direct contact with the skin.

2.1.5 Ensure static sensitive areas are clearly labeled.

3. Component and Sub Assembly Storage

3.1 All ESDS components and assemblies shall be stored and transported in completely enclosed conductive containers. To safely remove parts after transporting, the operator must place the container on a conductive, grounded surface at a static safe work area and "strap up" before opening the transport container.

3.2 Whenever possible, use the protective containers from vendors which are labeled as Static Sensitive to transfer and store ESDS parts.

3.3 Store all loose ESDS parts that are removed from their original packaging (tubes, tape and reel) in conductive bins and identify these parts as static sensitive devices with a 'CAUTION-STATIC SENSITIVE' label on the container or store on a grounded surface.

3.4 Use ESD shielded zip lock bags whenever possible. If not available use ESD shielded bags large enough to fold the open end over and seal the bag. Use a 'CAUTION-STATIC SENSITIVE' label to secure the seal for long term storage. Damaged static shielding bags (bags with cuts, holes or wear creases) shall not be used. Discard damaged bags.

4. Wrist Strap Testing

4.1 To test wrist straps, do the following:

4.1.1 Use a Desco A98150 Touch Tester, or equivalent. With a person "strapped up" with a wrist/ground cord, plug the cord into the tester touch plate and touch the test plate. Verify the green light illuminates indicating the strap is good.

4.1.2 Complete the log that is associated with the wrist strap tested. Logs are kept in each work center where straps are used.

Note: If the strap does not verify correctly, it should be discarded.

5. Table Top Mat or Conductive Table Top Test Procedure

5.1 To test tabletop mats or conductive tabletops, do the following:

5.1.1 Use a Fluke digital multimeter (DMM) or equivalent. With the black probe of the DMM at earth ground, place one hand on the tabletop/mat and hold the red probe of the meter with the other hand. The reading should be 0.5 to 10 Megohms.

5.1.2 Complete the log that is associated with the mat or tabletop tested. Logs are located in each work center where the mat or table is used.

Note: If the tabletop does not verify correctly, it must not be used until the problem is corrected.

Big Sky Laser
Parts Outline, 00148000

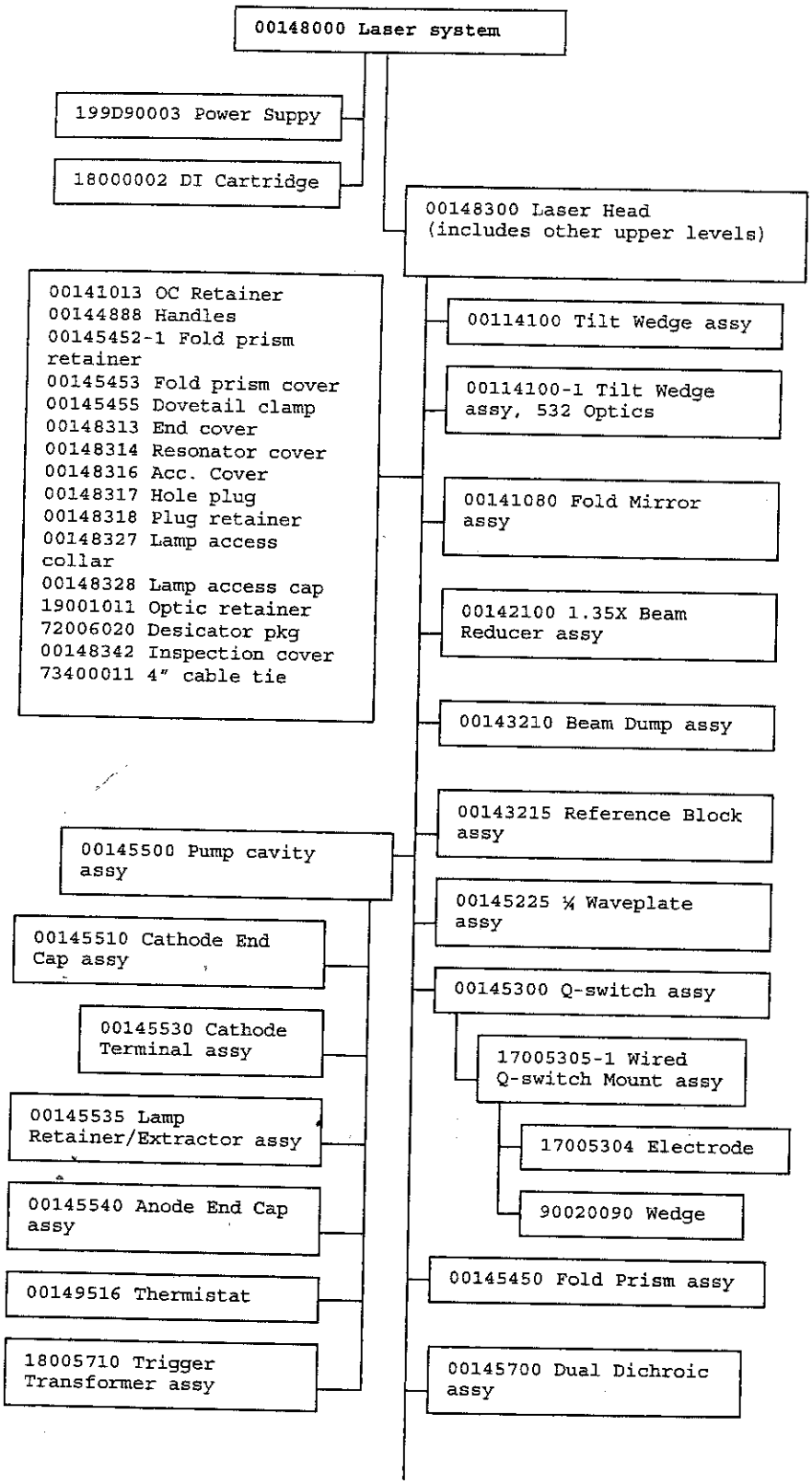

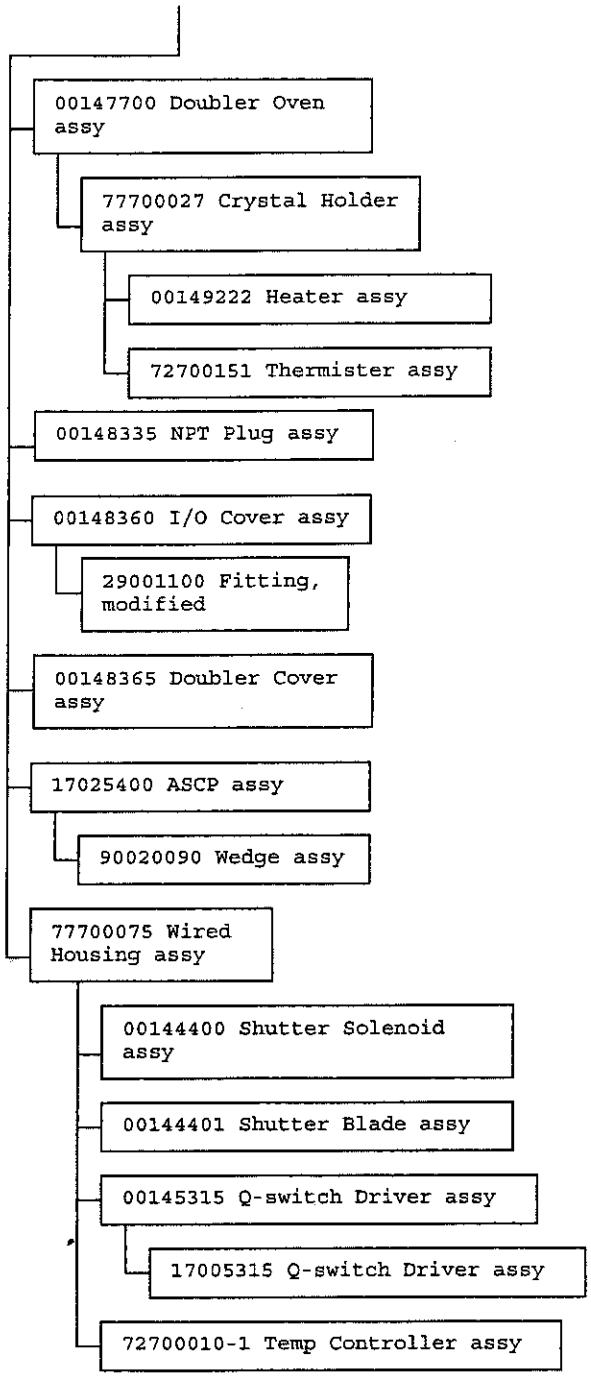
00147700 Doubler Oven assy
77700027 Crystal Holder assy
00149222 Heater assy
72700151 Thermister assy
00148335 NPT Plug assy
00148360 I/O Cover assy
29001100 Fitting, modified
00148365 Doubler Cover assy
17025400 ASCP assy
90020090 Wedge assy
77700075 Wired Housing assy
00144400 Shutter Solenoid assy
00144401 Shutter Blade assy
00145315 Q-switch Driver assy
17005315 Q-switch Driver assy
72700010-1 Temp Controller assy

TROUBLESHOOTING GUIDE – LASER HEAD
P/N 00148300

OVERVIEW

This troubleshooting guide is for the laser head only; faults related to other parts of the system are covered in the troubleshooting guide for the power supply. The guide is divided into sections based on the symptoms observed. In each section, the symptom(s) will be followed by possible faults/solutions, normally listed in order of likely occurrence. In a small number of cases, a particular fault may have a root cause in either the head or the power supply. In such cases, the guide will refer to the power supply generally as a possible source of the trouble.

For the purposes of the guide, some assumptions are made. First, the laser head, power supply unit, and the controller are connected, and all connections are tight, including electrical connectors and hose connections; the system is connected to the proper line voltage and all power switches/breakers are on; and the reservoir is filled with distilled water. It is also assumed that the head has previously been operating correctly and that all operational settings are correct to achieve the desired output. Finally, it is assumed troubleshooting on this level will be done in a laboratory setting, rather than in the field.

No Green Output from the Laser

1. *Is the shutter open?* Check the shutter for proper operation. This can be done with the resonator cover either in place or removed. If the cover is in place, listen as the shutter is cycled; a definite click should be heard as the shutter opens. With the cover off, watch the shutter blade while it is cycled and look for the blade as it opens. If the shutter does not operate or does not open fully, the problem can be a poor or open connection to the solenoid, a loose shutter blade, a wire or harness preventing operation (binding), or a bad solenoid. First, look in the area around the shutter blade to ensure nothing is holding the blade in place. Next, check the shutter blade by cycling the shutter off; use a 0.050" ball driver to tighten the retaining screw and retest the shutter. If it still does work, replace the shutter solenoid.

2. *Is the flashlamp flashing?* Check to ensure the lamp is flashing; if not, check the retainer/extractor to ensure it is completely tightened in the pump cavity. Pull the flashlamp to ensure it is not broken, and ensure the correct end (the anode end) is inserted in the retainer anode connector. (The anode end of the lamp has a dark ring inside the envelope at the end of the electrode. Also, Mfr. Part/Lot number information is etched in the glass at the cathode end of the lamp, and there will be a small raised spot – the tip-off – located in the envelope material near the cathode end.)

   Reinstall the flashlamp. If the lamp still will not flash, visually inspect the high voltage connections to the pump cavity end caps. The connections at both ends should be tight. Carefully tighten any loose connections and attempt to flash.

NOTE: Use caution when working around the lamp terminals of the pump cavity – high voltage may be present! Ensure that power is removed from the system before removing the pump cavity terminal covers.

Finally, check the pins on the external HV connector for signs of damage. If the pins are damaged, replace the connector. (Most likely, the HV connector on the power supply umbilical will also need to be changed.)

If the lamp still does not flash after the above steps are tried, the problem is most likely in the power supply. Note: if the flashlamp will not flash or simmer, measure the resistivity of the coolant water; if the resistivity is too low, the lamp will not simmer properly.

3. *Is the trigger transformer arcing to the housing?* If the trigger transformer is allowed to arc to the housing, simmer will not be established and the lamp will not fire. Observe the side of the pump cavity closest to the resonator sidewall while starting the flashlamp. If the transformer is arcing, there will be a brief flash between the pump cavity and the sidewall, and a clicking sound will be heard. If this occurs, remove the pump cavity from the head and inspect the side of the pump cavity and the housing. There should be a cover in place over the trigger transformer pocket in the centerbody; it should be attached with two flat-head nylon screws. Also, the housing should have a piece of kapton (yellow plastic) tape attached to the sidewall near where the trigger transformer is located when the pump cavity is mounted in the housing. If these modifications are not in place, they will need to be performed in order to eliminate the arcing.

4. *Is the system Q-switching?* If the head is not q-switched, no green light will be produced. Remove the front cover from the laser head, as well as the Fold Mirror assembly. Take a power reading at this point; if the resonator output is not q-switched, no output will be detected. Between 2.3W and 2.8W output power (80mJ to 100mJ output energy) should be measured. If there is no output, measure the output of the Q-switch driver as follows:

Equipment needed:	*Tektronix model TDS220 two-channel oscilloscope, or equivalent;*
	Tektronix model P6015A, 1000x, 100Mohm, 20KVDC scope probe, or equivalent.
Scope settings:	*Trigger: CH1, rising edge, NORM setting;* *Time Scale: 5µsec/div;* *Ch1 Amplitude: 500V/div; CH1 probe setting: 1000x;* *Bandwidth Limit Off*

*The output voltage is measured across the output of the CCA; attach the oscilloscope probe to the **HV OUT** pad (white wire) and the signal ground to the **HV RTN** pad (black wire). **(Note: It may be necessary to gently scrape the pads before attaching the scope probe, in order to remove some of the conformal coating. Before touching the pads, ensure the power is removed from the circuit.)***

Once the connections are made, turn on the system, and begin Q-switching. The waveform should resemble the waveform in Figure 1.

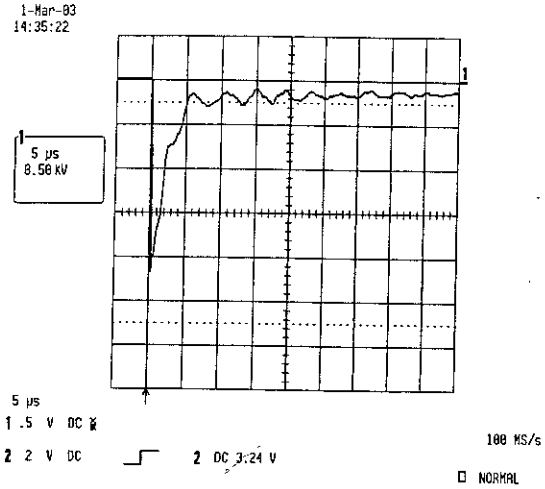

Figure 1.

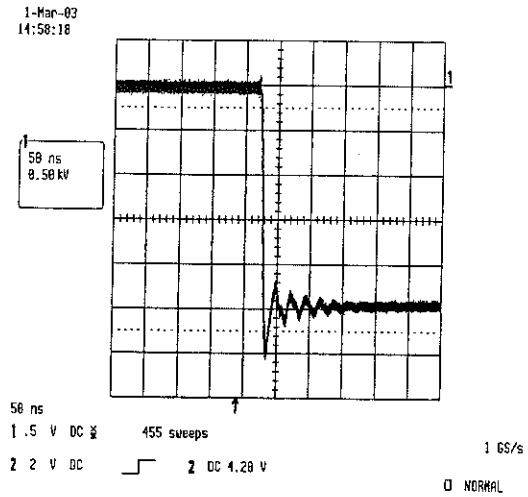

Figure 2.

Change the time scale on the oscilloscope to 50nsec/div. The waveform should resemble the waveform in figure 2.

If no output is measured on the oscilloscope, replace the q-switch driver; if the output resembles those above, replace the q-switch assembly.

5. *Is the doubler operating properly?* If laser energy is measured at the output of the resonator (at the fold mirrors), remove the doubler cover from the laser head, and inspect the doubler oven. The oven assembly should be tightened firmly in place, and the waveplate mount should be firmly attached to the input end of the oven. If either the oven or the waveplate are loose, perform the oven adjustment procedure. If the oven and waveplate are in place, remove the reference block from the doubler pocket, and perform a visual inspection of the doubler oven using an inspection mirror and a flashlight. Ensure that all assemblies are tightened in place and are properly aligned.

   Remove the flat-head screw holding the connector stack in place, near the doubler oven. Disconnect the top connector pair, and connect the oven-side connector to the digital multimeter, using the oven test harness. Set the multimeter to resistance check, on the 20kΩ scale. Run the system until the oven

temperature is at the full operating level – at least 10 minutes. The measured resistance of the oven thermistor should be 5007Ω, +/- 30Ω. If the resistance is not within tolerance, slowly adjust potentiometer R33 on the oven controller until the proper resistance is measured. (This procedure should be done in small increments; adjust the potentiometer by a small amount, then wait a few minutes for the temperature to stabilize, then adjust again. Repeat as necessary to achieve the proper output.) If the resistance cannot be adjusted, or if the potentiometer does not operate properly (intermittent readings, resistance "jumping"), replace the oven controller.

Low Output Energy

1. *Is the system misaligned?* If a low energy situation is combined with a distorted beam profile, it is likely there is a misalignment in the system. This misalignment occurs most often in one of four places: the resonator wedges, the output coupler waveplate, the doubler waveplate, and the doubler oven. In order, check each point as follows to determine whether it is the source of the misalignment.

   Note: Do not attempt the following step with a q-switched laser. Damage to the optical train can result. Also, do not use excessive force when testing the position of the optical assemblies. Over-stressing the retaining screws of the assemblies can cause damage to the assemblies and the retaining hardware.

   Remove the front cover of the laser head and the turning mirror assembly. Using a small (1/16") ball driver or gauge pin, **gently** try to turn the resonator waveplate retainer. If the retainer moves, use the hold-off adjustment procedure to set the hold-off of the resonator. Tighten the set-screw holding the waveplate in place. If the waveplate does not move, loosen the set-screw and adjust the waveplate for long-pulse operation. Test the two wedge retainers for tightness while watching the beam profile and monitoring the output power. If either of the retainers moves with only a small amount of force applied, perform the resonator adjustment to optimize the resonator output. Test the output coupler waveplate in the same way, adjusting as necessary.

   For the doubler oven, run the laser at low power, then use the angle-adjusting tool to test the tightness of the oven mounting screws. If the assembly turns freely, use the tool to optimize the oven position, then re-tighten the screws. Follow the same procedure for the doubler waveplate; test for tightness, then adjust if necessary to optimize the output.

2. *Is there a blockage in the beam path?* It is possible that an item (wire, cable tie, etc.) has moved into the beam path. This would appear as a sizeable power drop, combined with a noticeable change in the beam profile.

Note: If it appears there is any kind of blockage in the beam path, stop lasing immediately. Find and remove any blockage before lasing. Obstructions in the beam path can cause damage to the optical components.

Check the entire beam train from the shutter blade to the output window for signs of a blockage. Move any obstructions out of the beam path and tie them to one side if possible. Note: this can be a very subtle problem; in some cases, cable ties are situated very near the beam path due to space constraints.

Another possibility is that the reference block has become loose and is partially blocking the beam. This will be indicated by low power, clipping on some part of the beam profile, and probably a high peak-to-average ratio. With the laser running at low power (approximately 12J input energy), loosen the two mounting screws on the reference block and slide it sideways to center the beam in the aperture. With the beam centered, tighten the mounting screws.

Finally, a low power situation may be cause by movement of the fold prism assembly, which would steer the beam off the KTP crystal in the doubler oven. In addition to low power, there will also be clipping of the beam and a change in the position of the beam in the accessory pocket. Remove the two seal screws from the I/O (rear) cover of the laser head, and use a 3/32" ball driver to loosen the two retaining screws inside the head.

Note: Do not loosen the screws more than 1-2 turns, as they will fall inside the head and cause the assembly retainer to fall. The laser could be damaged if the system is run with the fold prism in this position.

Using the fold prism adjustment tool, move the assembly sideways to center the beam in the aperture of the doubler oven. Tighten the two retaining screws on the fold prism assembly and replace the seal screws in the laser cover.

3. *Are any optics dirty or contaminated?* This can be a problem for heads that have been opened for other reasons and can also show up as spots on the beam profile. Be aware especially of possible contamination of the output window or water spots on optics if there has been a water leak in the head. Inspect all optics with an inspection mirror and a bright flashlight for any signs of a film or other contamination. Clean optics as necessary.

4. *Are any optics damaged?* Same as above, except the output drop will generally be greater and some change in the beam profile will generally be seen if damage is great enough to cause an energy loss. As above, inspect all optics with a bright flashlight and look for spots or obvious damage. The most likely sources will be the rod faces, the KTP crystal or the waveplate in the oven, the Q-switch crystal and the telescope optics. Replace optics or assemblies as necessary.

Note: if there is one damaged optic, there are likely more.

5. *Is the pump cavity contaminated?* Coolant contamination can cause degradation of the reflector material and a significant power loss. Remove the fold mirror assembly and measure the output of the resonator. If there is a loss out of the resonator and no other fault can be isolated, remove the HV lead from the cathode connector, and pull and inspect the cathode terminal. If there is any sign of corrosion or blackening on the surface of the terminal, the pump cavity is likely contaminated. Replace the pump cavity and return for rework.

6. *Is the Q-switch driver HV set correctly?* If there is no sign of misalignment or damage in the profile, check the HV output from the Q-switch driver (see above). The output voltage from the driver should be approximately 3.0kV =/- 50V; if the output is lower - approximately 2.5kV – the driver may be misadjusted or may be defective.

7. *Is the oven temperature properly set?* If the oven temperature has drifted, the result is lower or unstable power output. Check the oven temperature as shown above and verify the correct temperature.

<u>The Beam is not Positioned Properly</u>

If the beam is not in the proper position in the accessory pocket, the alignment may have changed. This may be due to a loose tilt-wedge assembly, or movement of the fold prism assembly (see above), the dichroic assembly or the telescope assembly.

1. To test the tilt wedge assembly, first grasp the tilt ball between two fingers, being careful to avoid the beam path. Gently try to turn the ball; if it moves at all, perform a boresight alignment.

   If the ball does not move, use a small (0.050") ball driver and try to rotate both of the wedge retainers; if either one moves, loosen the retaining screws and perform a boresight alignment.

2. Use the procedure shown above (#2 under low energy) to test for and correct misalignment of the fold prism assembly.

3. To test the dichroic assembly, run the laser at low power and observe the back side of the beam dump on the assembly. Some scattered light should be observed through the beam dump, and it should be generally centered in the aperture. With the laser off, grasp the assembly between two fingers, being careful to avoid the beam path, and gently try to rotate the assembly (do not apply too much force or rotate too far; this can cause damage to the system). If the assembly rotates freely, turn it to re-center the reflection in the aperture, tighten the retaining screws, and perform a boresight alignment.

4. To test the telescope, with the laser off, grasp the telescope housing and gently rotate the assembly. If there is any movement, loosen both of the assembly mounting screws, push the assembly as far as possible toward the output (away from the oven assembly), and tighten the screws. It will then be necessary to perform the spot-size adjustment, as well as the boresight alignment.

   If the rear bushing on the telescope is loose, it is possible the spot size is also incorrect. **DO NOT RUN THE LASER IF YOU SUSPECT THE REAR BUSHING IS LOOSE!** With the laser off, gently push the bushing forward (into the main telescope housing). If the bushing moves at all, loosen the retaining screw and push the bushing all the way in. Restart the laser and perform a spot-size adjustment and a boresight alignment.

No Output/Incorrect Output from the Lamp Detector

If the lamp detector does not show the proper output, there are two possible causes: input power from the power supply, or the Lamp Detector CCA. If there is no output from the circuit, disconnect the Molex connector from the Lamp Detector CCA and measure the voltage across pins 3 and 2 of the harness connector. The voltage should measure +15V. Measure the voltage across pins 1 and 2; the voltage should be –15V. If no voltage is measured, check the power supply. If the proper voltage is measured, replace the Lamp Detector CCA.

If the circuit gives an improper output, perform the Lamp detector adjustment procedure; if the output cannot be adjusted to the proper value, replace the CCA.

No Power to the Accessory Pocket

If there is no power to the accessory pocket, there are two possible causes: no power from the power supply, or a defective Feedthrough Board. Remove the power connector from the resonator side of the Feedthrough Board and measure the voltage across pins 5 and 6; 24V should be measured. If no voltage is present, check the power supply. If the proper voltage is present, replace the CCA.

Water Leaking (Various Locations)

It is possible that water leaks may develop over time in the pump cavity. The places most susceptible to leakage are the rod apertures, the joints between the end caps and the centerbody, the lamp terminal pockets in the endcaps, the trigger pin pocket and the flashlamp pocket.

If a leak is detected, try to find the approximate location of the leak. The easiest locations to find are those at the lamp terminal pockets, the rod apertures in the cathode end cap, and the flashlamp pocket in the anode endcap. These can be inspected without removing the pump cavity from the housing.

To inspect the lamp terminals, remove the terminal covers. Inspect the HV connection to the terminal for signs of corrosion; if any is found, replace both the terminal and the HV harness. Remove the terminal and inspect the o-ring seal on the outside of the terminal. The o-ring should be smooth and contain no cracks or tears. If any damage is found on the o-ring, replace it. Inspect the terminal pocket for any signs of scratches or cracks. If any are defects are found, the end cap will need replacement.

If water is seeping from one of the rod apertures in the cathode end cap, the pump cavity will need to be disassembled to find the source of the leak. As noted above, do not run the laser with water in the rod apertures. This can cause damage to the rod faces, and also to other optics.

If the leak is coming from the lamp tube at the rear of the housing, remove the lamp retainer/extractor from the pump cavity. Inspect the o-ring on the anode socket for signs of wear (cuts, tearing, etc.) and if any are found, replace it. Reinsert the lamp and test. If the leaking persists, the problem is in the anode end cap, which will have to be replaced.

If the source of the leak cannot be found with the pump cavity in place, remove it from the housing. Inspect the rod apertures in the anode end cap, and the seams between both end caps and the centerbody. Remove the cover from the trigger transformer pocket and look for leakage around the trigger pin. If any water is seen, test the tightness of the trigger pin by turning gently. If the trigger pin moves, remove the wire lug from the pin using a ¼" nut driver, tighten it until it is snug against the bottom of the pocket. (DO NOT overtighten!) If the trigger pin does not need to be tightened, remove it from the pocket and inspect the mounting hole. Look for signs of wear on the threads or for pieces of the pump cavity material around the hole. If any damage is found, the centerbody will need to be replaced.

Big Sky Laser Technologies
601 Haggerty Lane, Bozeman MT 59715

Laser Head 00148300 Component Replacement / Alignment Procedure

1 Purpose and Scope:

1.1 To provide a written procedure defining the integration and alignment of 532 nm linear osc/amp laser head part number 00148300.

2 Responsibility

2.1 It is the responsibility of all personnel involved in the integration and alignment of 532 nm linear osc/amp laser head part number 00148300 to follow this procedure.

Written/Revised by: _____ Date_____

Approvals

Engineering: _____ Date_____

Production: _____ Date_____

Quality Assurance: _____ Date_____

3 Procedure

3.1 **Important: Do not begin flashing the lamp without the shutter in the closed position.**

3.2 **Important: Do not make any adjustments in the oscillator or the amplifier while q-switching.**

3.3 **Important: Tighten all screws in an X pattern.**

3.4 **Important: Allow coolant to cycle for at least two minutes each time the power supply is turned on in order to allow the coolant conductivity to drop below .15µs.**

3.5 **Reference:**

3.5.1 Assembly drawing 00148300.

3.5.2 Tighten all hardware utilizing 09-P-010.

3.5.3 Clean all parts prior to assembly utilizing procedure 09-P-009.

3.5.4 System Specification # 3226E.

3.5.5 Electrostatic Discharge (ESD) Procedure 09-P-012.

3.6 **Oscillator Pocket Component Removal / Installation**

3.6.1 Q-switch assembly (00145300)

3.6.1.1 Removal: Remove nylon screw retaining q-switch connector at the q-switch driver and disconnect connector. Cut the 4 wire ties retaining the q-switch High Voltage wires in the oscillator pocket. Hold assembly firmly against housing while removing mounting screws. Carefully remove assembly using caution not to damage optics on each end of q-switch assembly or optics on other assemblies nearby.

3.6.1.2 Installation: **Use caution not to pinch or cross q-switch assembly High Voltage wires underneath assembly mount or top.** Hold High Voltage wires straight out from q-switch assembly ensuring that the first inch from the assembly is unwound. Install assembly with waveplate facing the shutter blade. Slide assembly flush against reference edge while securing mounting screws as shown in assembly drawing 00148300. Plug q-switch

connector into mate on q-switch driver and secure with nylon screw. Use 4 wire ties (73400011) to secure High Voltage wires to wire tie cleats in oscillator pocket making sure that the wires do not interfere with shutter blade motion. Loop any excess slack in High Voltage wires into doubler pocket.

3.6.2 Polarizer Assembly (17025400)

3.6.2.1 Removal: Hold assembly firmly against housing while mounting screws are removed. Carefully remove assembly from mounting position taking care not to damage any optics on the assembly or in the vicinity of the assembly.

3.6.2.2 Installation: Hold assembly firmly against housing and slide flush against the reference edge while tightening mounting screws. The alignment wedge faces the q-switch assembly. Tighten screws beginning with concealed 3rd screw as shown in assembly drawing 00148300.

3.6.3 HR Mirror (90010032)

3.6.3.1 Removal: Position laser head so that the handles are on top. Remove front cover. Remove fold mirror assembly. Remove HR mounting screws while holding HR Mirror retainer against housing being careful not touch the HR optic. Carefully tilt the top edge of the retainer towards you. Pull retainer away from housing paying attention so that the optic does not fall out.

3.6.3.2 Installation: Install o-ring into HR retainer and then the HR mirror with the HR surface facing away from o-ring as shown in assembly drawing 00148300. Position head with handles up. Position retainer so that the far edge touches housing first. Then tilt the near edge upwards until retainer is flush against housing. If retainer position has to be translated across housing surface for mounting alignment, tilt top edge away from housing and slide retainer across housing surface with only the bottom edge of the retainer touching the housing. Secure retainer with mounting screws.

3.6.4 Pump Cavity Removal / Installation (00145500)

3.6.4.1 Removal:

3.6.4.1.1 Drain coolant from head.

3.6.4.1.2 See 3.7.1.2. Remove I/O cover.

3.6.4.1.3 Disconnect the lamp detector board. Remove the 1st fold prism cover. Remove o-ring from flashlamp access tube. Loosen pump cavity mounting screws. Insert 1", #4 screws into the flashlamp terminals to act as handles for lifting pump cavity.

3.6.4.1.4 **When removing pump cavity from head, pay close attention so that the flashlamp access tube does not damage fold prisms and that the pump cavity does not touch the waveplate.** Using the #4 screws as handles, lift pump cavity out of head raising the end near the polarizer assembly first. Clean any water that may have leaked in the process of removal.

3.6.4.2 Installation:

3.6.4.2.1 Check pump cavity end cap alignment. Insert 1", #4 screws into flashlamp terminal to act as handles for the pump cavity. Remove o-ring from flashlamp access tube. Remove the 1st fold prism cover.

3.6.4.2.2 Using the #4 screws as handles, insert pump cavity sliding flashlamp access tube between fold prisms while raising the other end. **Be careful not to touch the fold prisms with the flashlamp access tube of the pump cavity.** After the end of the flashlamp access tube has passed by both fold prisms, begin to lower the other end of pump cavity being careful not to damage output coupler waveplate or pinch electrical wires near polarizer assembly. **Use caution to avoid damage of optics if pump cavity does not drop smoothly onto pump cavity positioning pins.** drop the pump cavity end near the polarizer assembly onto

its positioning pin first and then drop the other slotted end of pump cavity onto its positioning pin.

3.6.4.2.3 Tighten pump cavity mounting hardware verifying that no electrical wires are pinched underneath pump cavity. Reinstall 1st fold prism cover and lamp access tube o-ring. Connect lamp detector board.

3.6.4.2.4 See 3.7.1.3 for instruction to install I/O cover and align flashlamp terminals.

3.6.5 Flashlamp Terminal Removal / Installation

3.6.5.1 **CAUTION: High Voltage exists at flash lamp terminals. Do not remove flashlamp terminal covers while laser is running.**

3.6.5.2 Note: This procedure applies to both terminals.

3.6.5.3 Removal: Shut down laser. Drain laser head. Remove flashlamp assembly. Remove flashlamp terminal cover. Detach High Voltage wires. Remove terminal retaining screw. Insert a 1", #4 screw into terminal to act as a handle. Remove terminal.

3.6.5.4 Installation: Lightly lubricate o-ring channel on flashlamp terminal and install o-ring. Insert screw in terminal to use as a handle. Insert terminal into end cap bore with the half-moon cutout on terminal top facing the terminal retainer screw hole. Install terminal retainer screw. Insert flashlamp terminal alignment tool (FIX14552) into pump cavity and connect High Voltage wires to flashlamp terminal making sure that the High Voltage lugs are centered in the pump cavity end cap groove as shown in the Harness Securing Detail of assembly drawing 00148300. Remove terminal alignment tool and insert flashlamp assembly. Install flashlamp terminal covers.

3.6.6 Trigger Transformer Removal / Installation

3.6.6.1 Removal: Remove the pump cavity from head as in 3.6.4.1. Remove screw retaining electrical connectors on side of pump cavity. Set pump cavity on its side so that the trigger pin cover is facing up. Remove trigger pin

cover and detach trigger transformer from trigger pin. Remove trigger transformer from pump cavity.

3.6.6.2 Installation: Insert trigger transformer into bore on top of pump cavity center body. Set pump cavity with trigger pin pocket facing up. Connect trigger transformer to trigger pin. Install trigger pin cover with nylon screws. Connect trigger transformer input connector to other side of pump cavity. Install pump cavity in head as in 3.6.4.2.

3.6.7 Output Coupler Waveplate Assembly (00145225)

3.6.7.1 Removal: See 3.6.4.1 for pump cavity removal instructions. Remove pump cavity. Loosen waveplate assembly set-screw. Remove waveplate assembly.

3.6.7.2 Installation: Check bottom of tapped hole for the waveplate assembly set-screw and remove any burs. Insert waveplate assembly as shown in assembly drawing 00148300 and tighten set-screw enough to hold assembly in place. Install pump cavity as instructed in 3.6.4.2.

3.6.8 Output Coupler (90110050)

3.6.8.1 Removal: See 3.6.4.1 for pump cavity removal instructions. Remove pump cavity. Hold output coupler retainer firmly against housing while removing retaining screws. Tilt top edge of retainer towards you and pull away from housing ensuring that output coupler optic does not fall from the retainer.

3.6.8.2 Installation: Install o-ring into retainer and then the output coupler mirror with the partially reflective surface facing away from o-ring as shown in assembly drawing 00148300. Position retainer so that the far edge touches housing first. Then tilt the close edge upwards until retainer is flush against housing. Hold retainer firmly against housing while securing with ¼" long mounting screws. Install pump cavity as instructed by 3.6.4.2.

3.6.9 Shutter Blade (00144401)

Note: Use caution not to damage q-switch waveplate or wires when removing / installing shutter blade.

Note: Shutter pin is small diameter and care must be used not to bend or break by using too much force. If necessary, see 3.6.1.1 to remove and 3.6.1.2 to reinstall q-switch assembly to allow more room for shutter blade removal / installation.

3.6.9.1 Removal: Loosen set-screw being careful as shutter blade is torqued towards q-switch waveplate when loosening. Rotate shutter blade 90° clockwise from the closed position and hold. If necessary, use caution while sliding a small flathead screwdriver between the shutter blade and housing and slowly slide shutter blade away from housing and off of shutter pin.

3.6.9.2 Installation: Slide shutter blade onto shutter pin using caution near q-switch assembly. Rotate shutter blade counterclockwise until it rests on the closed position pin and tighten set-screw. **Check to verify that shutter blade is securely attached to shutter pin and is not obstructed by any electrical wires.**

3.6.10 Shutter Solenoid (00144400)

3.6.10.1 Removal: See 3.6.9.1 to remove shutter blade. Remove screw from positronics connector. Remove shutter solenoid mounting screws and pull solenoid from housing paying attention so that electrical wires are not damaged.

3.6.10.2 Installation: set shutter solenoid in place with wires exiting solenoid near the feedthru hole in housing. Secure shutter solenoid. Feed electrical wires under q-switch assembly's High Voltage wires and ensure that they will not restrict the shutter blade. Connect positronics connector to mate and secure. See 3.6.9.2 to reinstall shutter blade.

3.7 I/O Pocket Component Removal / Installation

3.7.1 I/O Cover Removal / Installation (00148360)

3.7.1.1 Note: Refer to assembly drawing 00148300.

3.7.1.2 Removal: Disconnect Flashlamp High Voltage wires. Disconnect trigger transformer and thermal switch. Remove I/O cover being careful not to touch large fold

prism assembly with lubricated o-rings on the coolant tubes.

3.7.1.3 Installation: Insert o-ring (86402048) into channel in I/O cover. Feed High Voltage harness wires into oscillator pocket. Apply Braycote lubricant to coolant tube o-rings (86440394). Install I/O cover assembly using caution not to touch the fold prism assembly with the lubricated o-rings on the coolant tubes. Secure cover. Connect trigger transformer and thermal switch and secure connectors. Insert flashlamp terminal alignment tool (FIX14552) into pump cavity and connect High Voltage wires to flashlamp terminals making sure that the High Voltage lugs are centered in the pump cavity end cap groove as shown in the Harness Securing Detail of assembly drawing 00148300. Remove terminal alignment tool and insert flashlamp assembly (00145535) applying lubricant (40001022) to end of cathode base of flashlamp and to the exterior o-ring (86602008) of the anode socket. Install flashlamp terminal covers.

3.7.2 1st (Small) Fold Prism (90100004)

3.7.2.1 Removal:

3.7.2.1.1 Drain coolant from laser head.

3.7.2.1.2 See 3.7.1.2. Remove I/O cover.

3.7.2.1.3 Stand head on its front end. Remove small fold prism cover. Remove small fold prism retainer. **Caution: Fold prism may remain delicately attached to retainer by set o-rings. Do not rely on the bond created by the o-rings.**

3.7.2.2 Installation: (refer to assembly drawing 00148300)

3.7.2.2.1 With head standing on its front end, place small fold prism in housing. Allow a 1/32" gap between end of prism and housing. Place o-ring link in position with any arch pointing up. Insert o-ring into prism retainer.

3.7.2.2.2 Turn head so the doubler pocket is facing you and install the prism retainer by tilting retainer back

towards you, placing the bottom on the housing first and then rolling the retainer forward and down into position. Tighten mounting screws.

3.7.2.2.3 Verify that there is a gap between end of prism and housing and that there is not a gap along the long edge of prism where it meets the housing. Also verify that the o-ring link is not pinched under retainer or prism.

3.7.2.2.4 Install small fold prism cover.

3.7.2.2.5 See 3.7.1.3 to install I/O cover.

3.7.3 Adjustable Fold Prism Assembly (00145450)

3.7.3.1 Removal: Remove pump cavity from head as in 3.6.4.1. Place head on front end. Remove dovetail clamp, remove fold prism assembly.

3.7.3.2 Installation: Place head on front end. Install fold prism assembly with adjustment pin located in rectangular hole feeding through to the doubler pocket. Install dovetail clamp (00145455). Slide fold prism assembly away from oscillator pocket and secure. Reinstall pump cavity as directed in 3.6.4.2.

3.8 Doubler Pocket Component Removal / Installation

3.8.1 Doubler Assembly (00147700)

3.8.1.1 Removal: Disconnect heater and thermisters from triple stack of connectors. Remove doubler assembly mounting screws (#2 screws) and remove doubler assembly being careful not to damage wires.

3.8.1.2 Installation: Place doubler assembly on positioning pin with the waveplate facing the I/O Cover and secure with mounting screws. Plug heater connector into bottom mate on triple stack of connectors. Plug thermister connectors into triple stack.

3.8.2 Reference Block (00143215)

3.8.2.1 Install reference block assembly with macor piece facing the telescope.

3.8.3 Telescope (00142100)

3.8.3.1 Removal: Slide adjustment screw in for minimum optic separation. Remove mounting screws while holding assembly firmly against housing.

3.8.3.2 Installation: Install telescope and slide assembly as close to dichroics assembly as slots will allow. **Make sure adjustment screw is set at minimal optics separation.**

3.8.4 Dichroics Assembly (00145700)

3.8.4.1 Install dichroics assembly with macor beam block facing the q-switch driver. Tighten mounting screws with assembly in the middle of its adjustment range.

3.8.5 532nm Tilt Wedge Assembly (00144100-1)

3.8.5.1 Install with tilt adjustment bolt facing the q-switch driver.

3.8.6 Output Window (90120004)

3.8.6.1 Removal: Remove 532nm tilt wedge assembly. While holding output window retainer, remove mounting screws. Remove retainer using caution not to allow optic to fall from retainer.

3.8.6.2 Installation: With tilt wedge assembly removed, install output window ensuring that the o-ring is between the housing and the optic.

3.9 Electronic Component Removal / Installation

3.9.1 Important: The following electronic boards are sensitive to Electrostatic Discharge (ESD). Refer to ESD Procedure 09-P-012 and use appropriate measures when handling electronic boards to protect them from ESD.

3.9.2 Lamp Detector Board (00149208).

3.9.3 Q-switch Driver Assembly (00145315).

3.9.4 Temp Controller Board (72700010-1).

3.9.5 Feedthrough Board (00149205).

3.10 Resonator Alignment

Big Sky Laser Technologies
601 Haggerty Lane, Bozeman MT 59715

Laser Head 00148300 Component Replacement / Alignment Procedure

Note: Front cover, fold mirror assembly, and 1064nm tilt wedge assembly must be removed for resonator alignment.

3.10.1 Cycle the power supply water pump on and off until no more air bubbles are seen in coolant output hose.

3.10.2 Turn on the power supply and check to ensure proper settings on supply in configuration #1 (as follows):

28Hz with 140 us q-switch delay,

Shutter closed,

Q-switch off,

Energy set to 12J mean.

RESET TO 23J PRIOR TO 3.10.4

3.10.3 With shutter closed, start flashing the flashlamp. Burn-in new flashlamps in by running at 28Hz, 23J, for 1 hour. Check new pump cavity assemblies for leaks at the flashlamp access tube, flashlamp terminals, coolant tubes, and around the pump cavity. **Caution: high voltage exists across flashlamp terminals.**

3.10.4 Open the shutter and check for presence of 1064 nm laser light at output aperture 1 using an IR Viewing Card. DO NOT start the q-switch. If light is seen, rotate holdoff waveplate on q-switch assembly and output coupler waveplate so that maximum output is achieved. If no light is seen, first rotate holdoff waveplate and output coupler waveplate to achieve output, and then maximize output. If light is still not seen, rotate one alignment wedge until light seen, and then maximize output with holdoff waveplate and output coupler waveplate. The holdoff waveplate is now set for long pulse mode.

3.10.5 Adjust the two alignment wedges until the oscillator is aligned (energy out is maximized and beam profile is at least 80% round). Lock down the wedges to prevent movement.

3.10.6 Optimize output coupler waveplate for max output. Tighten set-screw.

3.10.7 Rotate the holdoff waveplate until no lasing occurs. Increase the pump energy to 23J and repeat. Rotate the waveplate one full rotation to find best holdoff position. Note this pump energy. Lock down the waveplate to prevent movement. The waveplate is now set for q-switch mode.

3.10.8 Set the pump energy to 12J and start the q-switch. Check the output energy and beam profile. Slowly increase the pump energy until 100 mJ is output from the oscillator. DO NOT exceed $17J_{pump}$ or the pump energy that is 4J below that in 3.10.7. Note the pump energy required to achieve 100mJ output. **Do not run the laser any higher than this point, as damage in the oscillator may occur.**

3.10.9 The oscillator is now aligned.

3.10.10 Stop the q-switch, close the shutter, and then turn off the flashlamp.

3.11 **Amplifier Alignment**

Important: Do not align the amplifier with the laser q-switching.

Note: Some components in doubler pocket may need to be removed.

3.11.1 Install the 1064nm tilt wedge assembly (00114100), making sure that the adjustment nut is facing away from the q-switch assembly.

3.11.2 Install the fold mirror assembly (00141080).

3.11.3 Turn on power supply and check supply settings as in 3.10.2.

3.11.4 Position laser head at forward rail stop, imaging the input of the amplifier rod.

3.11.5 With shutter closed, start flashlamp. Then open shutter and set holdoff waveplate to long pulse mode. Verify existence of 1064 nm laser light at output aperture 2.

3.11.6 Using fold prism adjustment tool (FIX54504), adjust position of large fold prism until the amplifier beam is centered in aperture.

3.11.7 Using tilt wedge tool (FIXTW010) and 7/32" wrench, adjust the translation of tilt wedge assembly to center the beam input to the amplifier in the aperture.

3.11.8 Position laser head at rear rail stop, imaging the output of the amplifier rod.

3.11.9 Using 0.045" dowel pin, adjust alignment wedges of tilt wedge assembly to center beam output of amplifier in the aperture, maximizing output energy.

NEWPORT PZL-04 (TRULY RARE)

LUMITEK INC
9639 DR. PERRY RD
ELLICOTT CITY MD
21754
301-831-1001

3.11.10 Repeat steps 3.11.4 - 3.11.9 at least once, and until no more adjustments are necessary.

3.11.11 Set holdoff waveplate to q-switch mode as in 3.10.7.

3.11.12 Set the pump energy to 12J and then start the q-switch. Check output energy and beam profile. Slowly increase the pump energy until value recorded in 3.10.8. Verify that greater than 250 mJ output is attained out of amplifier. Record this value.

3.11.13 Stop q-switch, close shutter, stop flashlamp.

3.12 Doubler Installation and Alignment

3.12.1 Install output window (90120004) as shown in assembly drawing 00148300 ensuring that o-ring is not in clear aperture and is forming a good seal.

3.12.2 Install 532 nm tilt wedge assembly (00114100-1), making sure that adjustment nut is facing the q-switch driver.

3.12.3 Install plug (00148317) in housing with associated parts as shown in assembly drawing 00148300.

3.12.4 Install dichroics assembly (00145700) with beam dump facing the q-switch driver, aligning such that edges are fully vertical.

3.12.5 Install beam dump (00143210) in housing as shown in assembly drawing 00148300.

"KTP"

3.12.6 Install doubler oven (00147700) in housing such that waveplate is facing toward input as described in 3.8.1.2.

3.12.7 Turn on supply and check supply settings as in 3.10.2.

REPLACE COVER TO UNDERTAKE TEMP

3.12.8 Set the oven controller temperature to 72°C using a multimeter connected to one heater thermister on the doubler assembly. Note: 5k ohms equals approximately 72°C. LOWER RESISTANCE TO RAISE TEMP INCREASE RESISTANCE TO LOWER TEMP

100 Ω FLUCTUATION POSSIBLE (4.95 - 5.00 KΩ)

3.12.9 Set pump energy to 12J, turn on flashlamp, open shutter, and start q-switch.

3.12.10 Verify existence of 532 nm light at output aperture 3. Rotate waveplate one full revolution to find maximum output energy.

3.12.11 Using doubler adjustment tool (FIX40000), angle tune doubler oven until most uniform beam with maximum energy output is achieved.

3.12.12 Stop q-switch, close shutter

3.12.13 Install oscillator cover (00148314). Install accessory pocket cover (00148316) over front 2/3 of doubler pocket.

3.12.14 Let the flashlamp run at 28Hz, 20J for 30 minutes with covers on. **Follow this procedure regardless of initial head or water temperature. This procedure is intended to bring doubler crystal and oven controller, not the coolant, to ambient temperature.**

3.12.15 Decrease the pump energy to 14J for ten minutes to allow the head to settle at a temperature closer to operating parameters for alignment.

3.12.16 In the meantime, verify that the oven controller is operating at 72°C. Remove cover to make adjustments if necessary. Reinstall cover.

3.12.17 Wait five to ten minutes after reinstalling cover to ensure that the doubler crystal rises back to near operating temperatures. This length of time will be dependent upon the length of time that the cover was removed.

3.12.18 Open shutter, start q-switch.

3.12.19 Optimize doubler assembly waveplate and the angle of the doubler crystal for max output. Tighten set-screw and mounting screws.

3.12.20 **Caution: Do not exceed 150mJ output from the doubler assembly.** Slowly increase the pump energy until value recorded in 3.10.8 using Verify that at least 125mJ output is achieved. Record output energy achieved at pump energy recorded in 3.10.8.

3.12.21 Stop q-switch, close shutter, and stop flashlamp.

3.13 Telescope and Reference Block Installation and Alignment

Important: Do not install telescope prior to alignment of the doubler, as damage may occur.

Important: Always install telescope with optics set to minimum separation – any other position may result in damage to the doubler crystal.

3.13.1 Install telescope assembly (00142100) as shown in assembly drawing 00148300. **Ensure that the assembly is positioned closest to the dichroics assembly and optics are set to minimum separation. Other positions may cause damage of doubler crystal with back focus. Never deviate from this procedure.**

3.13.2 Turn on supply and check supply settings as in 3.10.2.

3.13.3 Set the pump energy to 12J and start the flashlamp, then open the shutter, and then start the q-switch. Verify that beam is centered through telescope and beam is steered through center of all other optics. Rotation of the dichroics assembly and 532nm tilt wedge assembly may be necessary.

3.13.4 Loosen the adjustment screw on the telescope, and slowly extend the telescope until approximately 4.7 mm beam diameter at output window is achieved. **Use caution if the slider does not slide smoothly. Do not extend telescope past this point, as damage of doubler crystal from back focus can occur.**

3.13.5 Tighten telescope adjustment screw.

3.13.6 Slowly increase pump energy until 125 mJ output energy is achieved. Do not exceed the pump energy recorded in 1.9.8 or 3.12.20.

3.13.7 Adjust adjustment screw on telescope to set beam diameter at 4.7mm.

3.13.8 Stop q-switch, with shutter open, increase pump energy until holdoff is lost or 23J is reached. Verify that this pump energy is at least 4J above that in 3.10.8

3.13.9 Stop the q-switch and close the shutter.

3.13.10 Install reference block assembly (00143215) as shown in assembly drawing 00148300 with the macor piece facing the telescope.

3.13.11 Open the shutter and start the q-switch. Adjust reference block assembly to allow max output energy. **If adjustment of the adjustable fold prism is necessary, pay attention to the beam profile and output energy to ensure that the input beam is not aimed off the doubler crystal by moving the fold prism.**

DRAWINGS

3.13.12 Record the pump energy required to achieve 125mJ output verifying that the values in 3.10.8 and 3.12.20 are not exceeded.

3.13.13 Stop q-switch and close shutter.

3.13.14 Insert 4mm aperture (FIX00149) into housing at the output window bore hole.

3.13.15 Open shutter and start q-switch.

3.13.16 Perform bore sight translation alignment using the tilt wedge tool (FIXTW010) and 7/32" wrench to adjust the 532nm tilt wedge assembly. Center the main energy density of the beam in the aperture.

3.13.17 Stop q-switch and close shutter.

3.13.18 Remove 4mm aperture and insert pipe plug aperture (FIX14555) into top hole on the front of the laser.

3.13.19 Open the shutter and start the q-switch.

3.13.20 Perform the bore sight angle alignment using a .045" dowel pin to rotate wedges in order to center the main energy density of the beam in the aperture.

3.13.21 Stop q-switching and close shutter.

3.13.22 Remove pipe plug aperture and reinsert 4mm aperture to verify that the bore sight translation has not changed. Repeat 3.13.13 - 3.13.22 until no changes are necessary.

3.13.23 Stop q-switching and close shutter.

3.13.24 Tighten retainer bolt on the tilt wedge assembly taking care not to over torque. Torque wedge set-screws to .6in-lbs. **If wedge set-screws are over torqued, it may cause depolarization of the beam.**

3.13.25 Repeat steps 3.13.13 – 3.13.22 to verify that the bore alignment did not change while tightening screws.

3.13.26 Stop q-switch, close shutter, and stop flashlamp.

3.14 Final Procedures

3.14.1 Verify that all set-screws are tightened. Tack bond all set-screws with Norland Optical Adhesive #123 red (40001009) including all

wedges, waveplates, and the shutter blade. Tack bond 532nm wedge retainers directly to the tilt wedge ball.

3.14.2 Install three wire ties on pump cavity.

3.14.3 Secure positronics connectors for oven and trigger transformer.

3.14.4 Install lower pipe plug assembly (00148335) in front of laser.

3.14.5 If necessary, install Desiccant pack as shown in assembly drawing 00148300.

3.14.6 Insert o-ring (86402043) into groove in front cover (00148313) and attach cover to head.

3.14.7 Install o-ring (86301058) into groove for oscillator pocket cover and attach oscillator pocket cover (00148314).

3.14.8 Install o-ring (86457070) into groove for doubler pocket cover and attach doubler cover assembly (00148365).

4 Final Testing / Validation

Note: Do all steps in this section at pump energy required to achieve 125mJ output at 28Hz.

4.1 Set the oscilloscope to the settings in 4.1.1. Connect the pulse width detector to the oscilloscope and verify that the pulse width is less than 6.5ns. Print a copy of the temporal profile.

4.1.1 Oscilloscope settings: 10 ns/div, 40 mV/division, 50 Ω DC coupling

4.2 Using the oscilloscope and settings as in 4.1.1 along with the pulse width detector, verify that the first shot energy is greater than 100mJ during 40Hz burst mode 2.5s on and 9.9s off. To do so, compare the amplitude of the first shot on the oscilloscope to the signal amplitude at 125mJ.

4.3 Verify the beam diameter, bore alignment, peak to average, and divergence of the beam meet all specs at 125 mJ output. Print out a copy of the near field beam profile.

4.4 Record the pump energy required to reach 125mJ output.

4.5 Connect the oscilloscope to the Flashlamp Detector Signal Adapter (FX001403). Connect signal adapter into Feedthru Board through the accessory pocket. Set the flashlamp detector board output to 4Vusing the oscilloscope settings in 4.5.1. This is done by adjusting the potentiometer located on the lamp detector board.

4.5.1 Oscilloscope settings: 1 ns/division, 1 V/division, 1 MΩ DC coupling, 30 MHz Bandwidth limiting

4.6 Stop q-switch, close shutter, stop flashlamp.

5 Completion Procedures

5.1 Install all covers.

5.2 To purge head with dry Nitrogen, use two seal screws (81110504) in I/O cover and one seal screw (81110302) in front cover. Apply thin film of Braycote to seal screw o-rings. Install one seal screw (81110504) in I/O cover. Blow Nitrogen through front cover for approximately 10 - 15 seconds and then install seal screw (81110302). Immediately turn laser around and finish purge by blowing bursts of Nitrogen into I/O cover, allowing air pressure to build to approximately 10psi and then releasing pressure each time. Do not exceed 20 psi. Do this five times and then quickly install seal screw to trap approximately 4 psi inside head. Listen for air leaks coming from head.

5.3 Install top pipe plug (00148335) in output end of resonator. Attach inspection cover (00148342) to front cover. Attach front cover if necessary.

5.4 Install flashlamp access cap (00148328) as shown in assembly drawing 00148300.

5.5 Drain coolant from head using drain fittings (29000140).

HEAD SN# 03062702 22J INPUT BREAKOVE FOR Q-SW

CAUTION

Power Supply Calibration Procedure

1. Connect head to a reference power supply approved for calibration (PS 038). Turn power supply on.
2. Start flashlamp and run at 20J for thirty minutes.
3. Run flashlamp at pump energy required to achieve 125mJ output for ten minutes.
4. Open shutter and start q-switch.
5. Note pump energy required to output 125mJ.
6. Stop q-switch, close shutter, stop flashlamp.
7. Connect head to power supply that is to be calibrated. Turn power supply on.
8. Start flashlamp and run for ten minutes at 20J.
9. Drop pump energy to that noted in 5.5 and run for ten minutes.
10. Open shutter and start q-switch.
11. Adjust the calibration factor (VOS) to achieve proper output energy. Typical values will be .97 or .98.
12. Adjust the calibration offset (VIS) until the capacitor voltage readout (V) equals the actual capacitor voltage (VA). Typical values will range from 50 to 70V offset (VIS).
13. Stop q-switch, close shutter.
14. Save calibration configuration and record.
15. Save configuration 1 default setting to:

    28Hz with 140 us q-switch delay,

    Shutter closed,

    Q-switch off,

    Energy set to 12J mean.
16. Open shutter and start q-switch to verify proper calibration.
17. Stop q-switch, close shutter, stop flashlamp.

> VMO 1100 – INCREASES LIMIT OF J INPUT

> VOS 100

> VIS 000

TROUBLE SHOOTING GUIDE, BSS P/S

1. Purpose and Scope:

1.1 Provide a basic understanding of the major components of the Power Supply to facilitate repairs in the field.

2. Equipment Required:

2.1 Oscilloscope, Tektronix TDS 220 or equivalent.
2.2 Digital Multi-Meter. Wavetek HD115B or equivalent.
2.3 Metric Ball Driver Set.
2.4 Screwdriver, flat tip 1.5 X 40 MM
2.5 Adjustable Wrench, 6 IN
2.6 High Voltage oscilloscope probe, LeCroy PPE 6KV or equivalent. CAUTION WHEN MEASURING HIGH VOLTAGE, 1200 VOLTS MAY BE PRESENT AND CAN BE LETHAL.

TROUBLE SHOOTING GUIDE, BSS P/S

COMPLAINT	CHECK
Dead (No Power)	1. Fuses, 10 amp 500v gl-Gg. 2. PFC CCA, Q4/300/0334. Check for AC line voltage J11:1&2,if not Test AC Switch and connectors. If OK, then check for 360 VDC at J10; 9&10, If not replace PFC CCA. 3. Check all connectors for proper seating. 4. 15 VDC Power Supply. Check AC in and 15 VDC out.
Lamp Won't Flash	1. Check for Faults. (See BSS Protocol RS485) If no Faults, connect Oscilloscope, Using High Voltage Probe, to the Lamp side of the of the Inductor and the Return to the Grounding lug next to the Inductor. Place Power Supply in External Trigger mode, do not supply Ext. Pulse. Place unit into Fire mode,See Waveform # 1.There should be -1200 VDC applied to the lamp leads to start Simmer.If not OK, replace TS CCA. If OK supply a trigger pulse check Umbilical connections and lamp. Check trigger pulse at J8:9 use J8:8 for return on TS CCA. If pulse is present replace TS CCA. (Q4/300/0625) See Waveform # 2 for normal waveform when lamp does flash.
No Communications	1. Check Switch ST1, (485 – 232) on Control CCA. 2. On Control CCA, Connect Oscilloscope's CH –1 to J1: 2 and CH – 2 to J1: 7 use J1: 5 for the Return on both channels. See Waveform #3 for proper Signals.If not OK replace Controller CCA, Q4/300/0618. If Controller CCA is changed use old EEPROM, MN4, this has all the settings stored in it. Check High Voltage. 3. 15 VDC Power Supply. Check AC in and 15 VDC out.
Safety Device Faults IF1.10 00 00 00 IF1.00 10 00 00 IF1.00 01 00 00 IF1.00 00 10 00 IF1.00 00 01 00 IF1.00 00 00 10 IF2.00 10 00 00 IF2.00 01 00 00 IF2.00 00 01 00	1. DI Cartridge, TCG CCA, Flow Switch. 2. Add water or water level sensor.Check unit for leaks. 3. Check and secure umbilical connections. 4. Check and secure umbilical connections. 5. Check and secure umbilical connections. 6. Check side covers and there safety switches. 7. Charger CCA and PFC CCA. If Charger CCA is changed, check High Voltage. 8. Simmer CCA and Cable connections. 9. Water Heater.

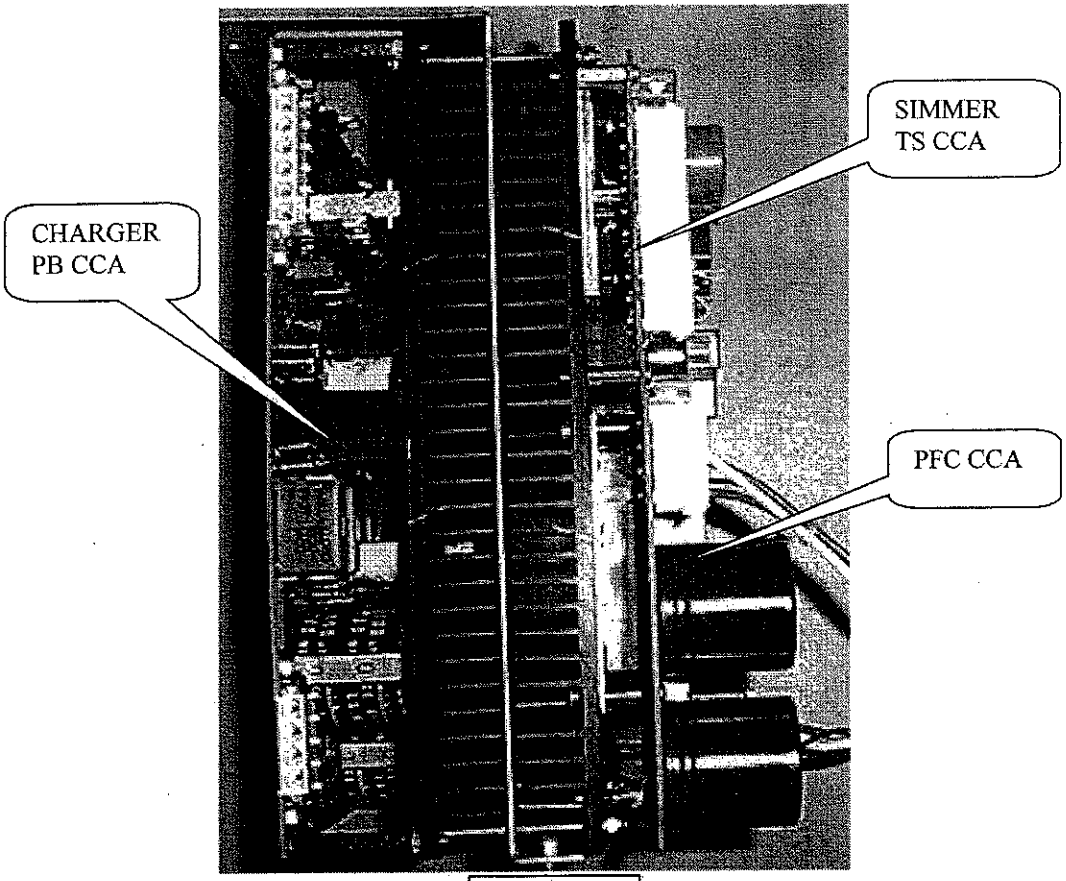

PHOTO # 3

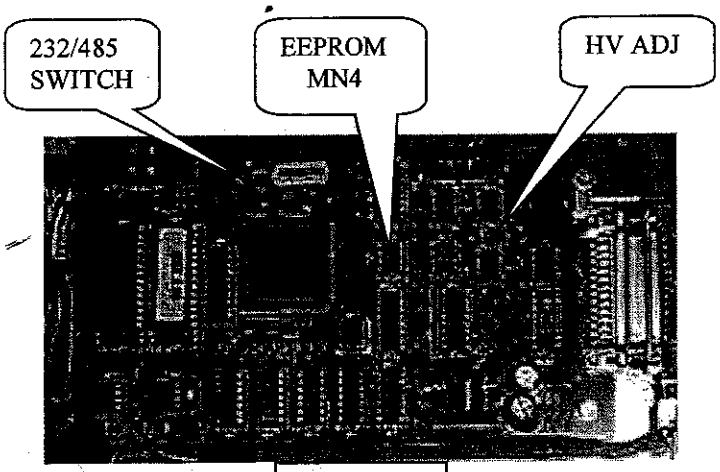

PHOTO # 4

TROUBLE SHOOTING GUIDE, BSS P/S

Set-up 5 on Cal Simon Scope

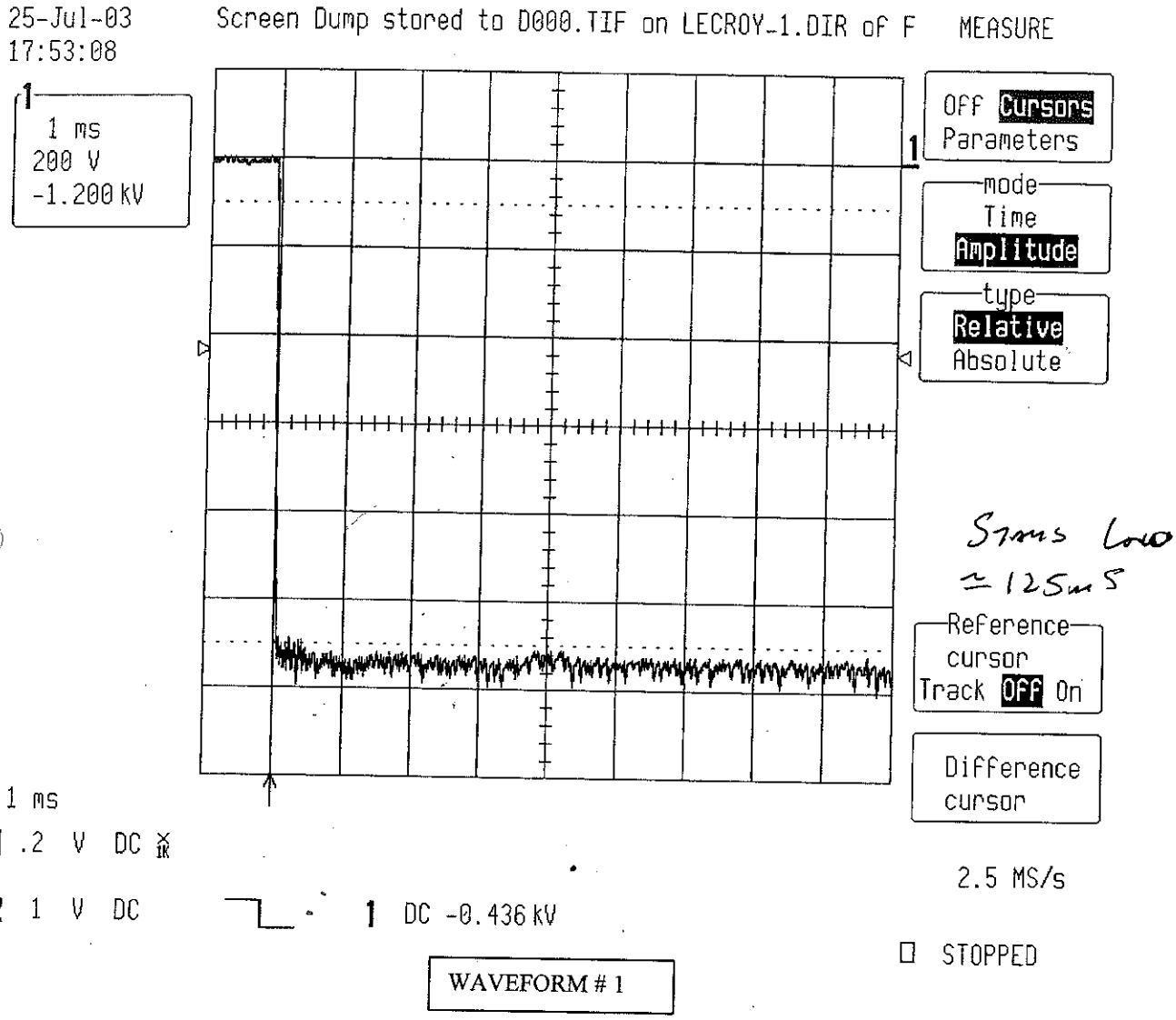

Sims Low
≃ 125mS

WAVEFORM # 1

TROUBLE SHOOTING GUIDE, BSS P/S

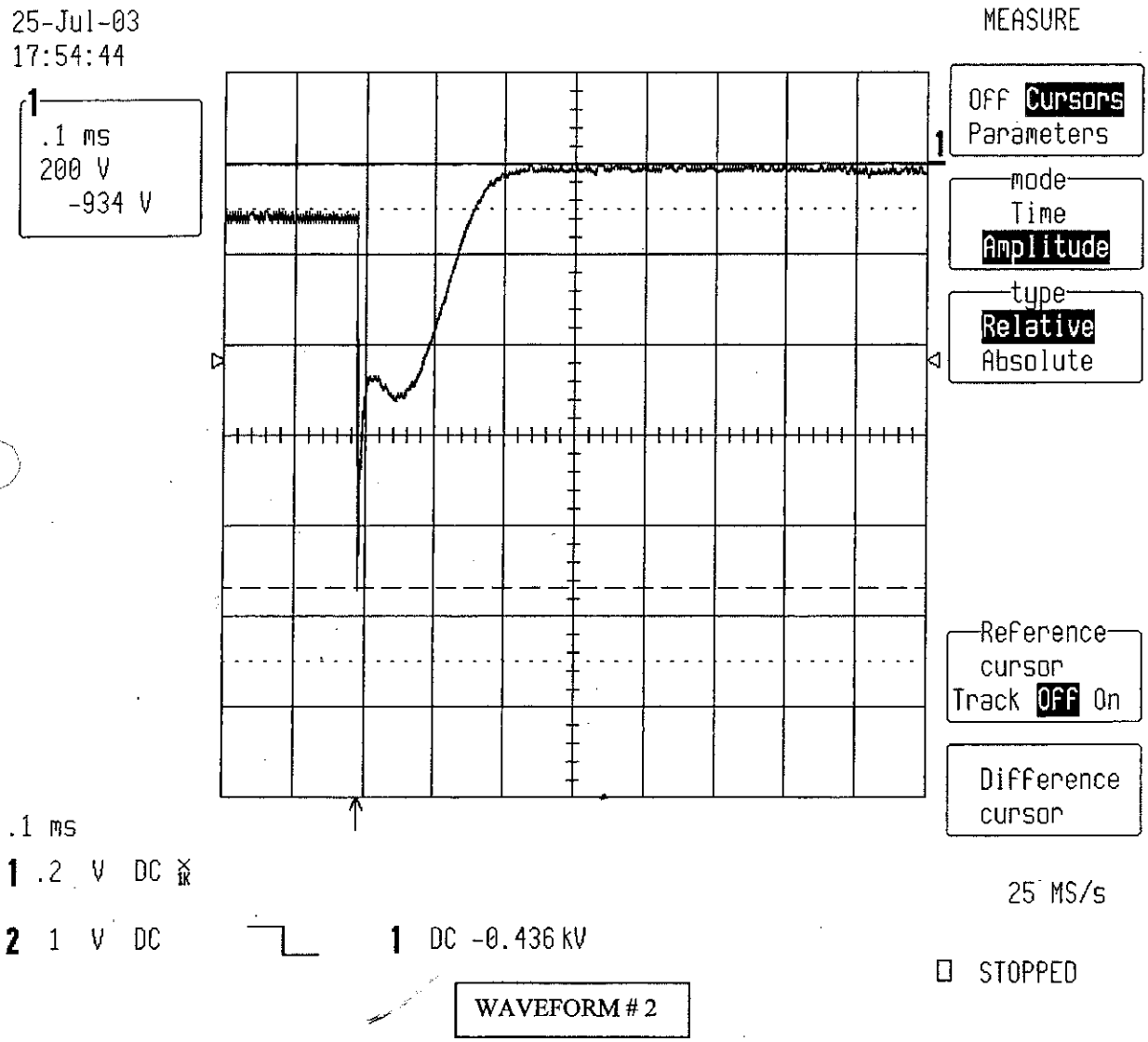

WAVEFORM # 2

TROUBLE SHOOTING GUIDE, BSS P/S

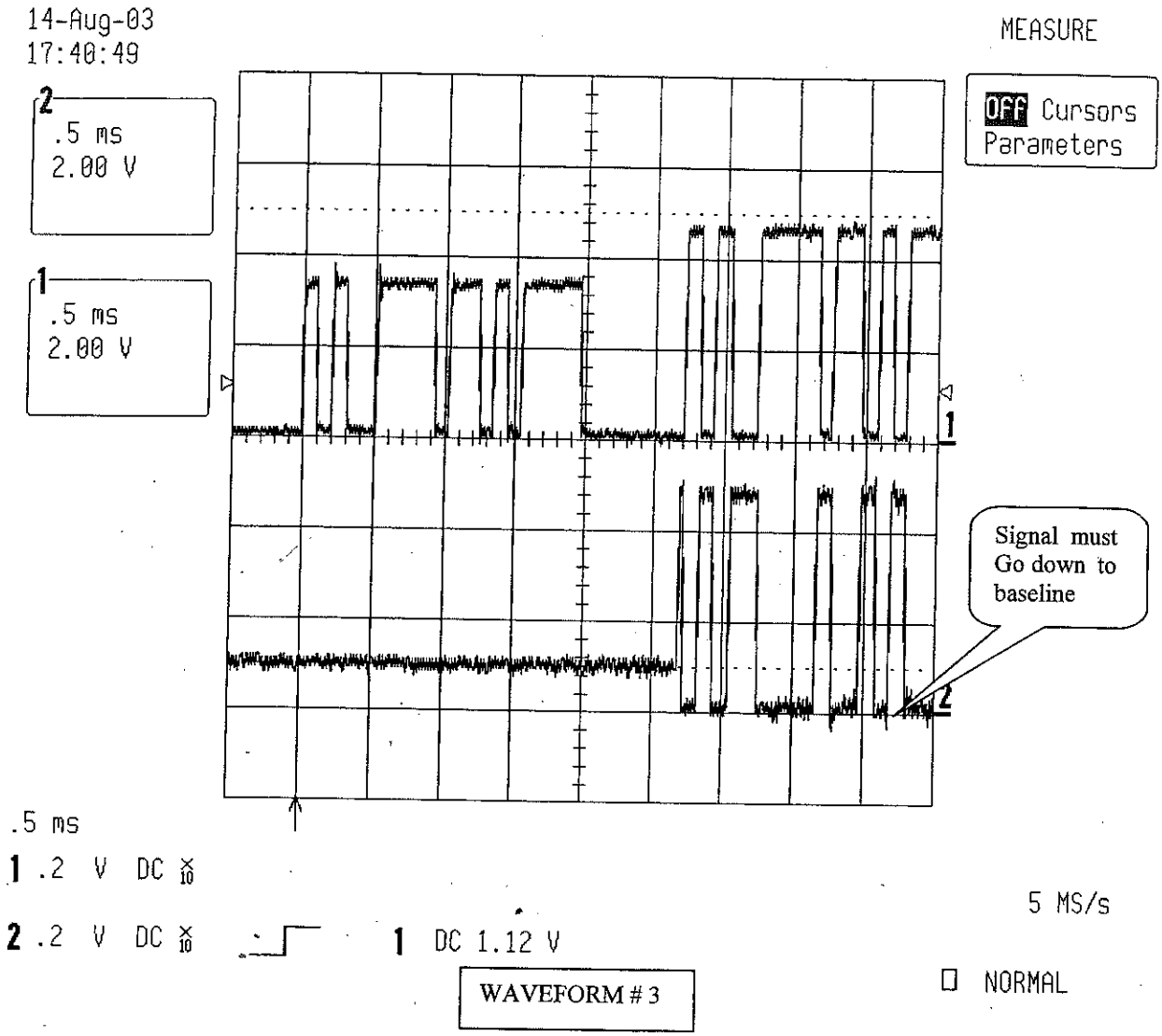

WAVEFORM # 3

The host computer has to incorporate an RS 485 half-duplex bi-directional interface (two wire), and the cable should be twisted-pair shielded (eventually grounded at both ends) and terminated at both ends of the chain. The I/O connector pin out diagram is shown on figure III-8. A and B are RS485 I/O pins. (For how connecting a full duplex interface to the half duplex bi-directional interface see at the end figure III-9)

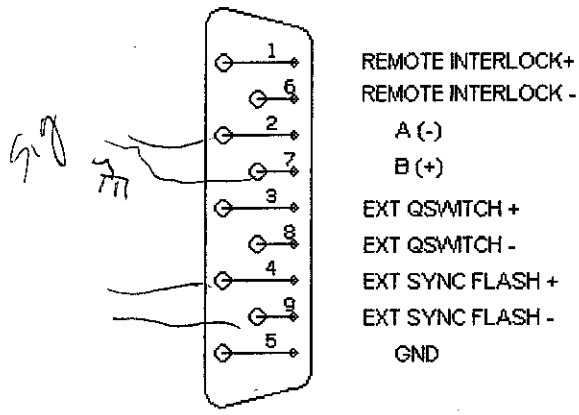

figure III-8

Commands are in ASCII string, upper case only, and must be terminated by Carriage Return Line Feed character "CRLF" or "LF". The RS485 communication parameters are :

9600 BAUD, 8 Bit, 1 Stop Bit, No Parity.

The commands via RS485 can be sent with maximum rate of 20Hz. The connection is working in half duplex.

If the sent character chain is not identified, the answer is **unknown char.**

During programming of data, if the number is out of range, then the answer is **overflow char.**

If the expected character is numeric and the entered one is not, then the answer is **not num. char.**

To identify the destination of the command, each command have to be preceded by **$xxx** where xxx is the serial number of the device acting as a destination address.

For example

$001S puts the device 001 in standby mode.

To reach, every devices on the RS485 chain, commands have to be preceded by the > symbol.

For example

>S puts every BSS device on the chain in standby mode

*Note in > mode, data collision may occur if more than one BSS devices are connected to the chain and answer in the same time (to disable answer see **ECH** command).*

The following commands can be used to control the operation of the **BSS**. Note that the answer consists of "CRLF" followed by 15 characters. For a better visibility, the space character is replaced by "°" :

RS485 command Computer ----> Laser	**Function**	**Answer message** Laser ----> Computer
Configuration parameters (Reading)		
X"CRLF"	Software review used	***SPECTRA-SC°-.--***
DAT"CRLF"	Date of Software review date/month/year	***--/--/--°°°°°°°***
CG"CRLF"	Reads cooling group Temp (°C)	***temp.°CG°--°d°°***
CGF"CRLF"	Reads cooling group Temp (°F)	***temp.°CG°---°F°***
T"CRLF"	Time counter (When switch ON hhhh= number hours and mm=minutes)	***ct°time°hhhh:mm***
R"CRLF"	Reads shutter state	***shutter°closed°*** ***shutter°opened°***

ROF"CRLF"	Reads open or close the shutter at run	***shutt.°at°run°-***
P"CRLF"	Reads stat pump	***CG pump°°°°°°°-***
ECH"CRLF"	Reads the echo mode	***echo°on°°°°°°°***

Note: no response are issued if echo is off

Configuration parameters (Programming)

SAV1"CRLF"	Saving the current configuration Valid range: 1 – 1	***Save°config.°°1***
R1"CRLF"	Sets opened or closed the shutter Valid range: 0 – 1	***shutter°opened°***
ROF1"CRLF"	Open or close the shutter at run Valid range: 0 – 1 (1 ⇔ Open the shutter at run)	***shutt.°at°run°1***
P1"CRLF"	Sets control pump Valid range: 0 – 1 (0 ⇔ Stop pump)	***CG pump°°°°°°°1***
SUC"CRLF"	Saving the current counter user	***user°ct°saved°°***
WOR"CRLF"	Status of laser	***I°a°F°b°S°c°Q°d***

		0	1	2	4	5	6
Interlock	(a)	ok	Fail	-	-	-	-
Flashlamp	(b)	stop	Single	Start	stop	single	Start
		Internal synchro			External synchro		
Simmer	(c)	off	On	-	-	-	-
Q-Switch	(d)	stop	Single	Start	stop	single	Start
		Internal synchro			External synchro		

"CRLF"	Reads the status of the lamp & QS operating mode	*see lamp & QS prog& activation*
ECH1"CRLF"	Sets the echo mode 0 : echo off (no response at any command however commands are still run) 1 : echo on standard mode	*echo°on°°°°°°°*

Flashlamp parameters (reading)

V"CRLF"	Flashlamp voltage (V)	*voltage°°----°V*
VA"CRLF"	Sampled capacitor voltage (V) S/H after the end of charge	*voltage°ac----V*
VT"CRLF"	Instantaneous capacitor voltage (V)	*voltage°it----V*
ENE"CRLF"	Flashlamp energy (J)	*energy°°°°--.-J*
CAP"CRLF"	Capacitor value (µF)	*capacity°29.3uF*
LPM"CRLF"	Trigger Flashlamp mode	*LP°synch°:°°-°°*
F"CRLF"	Pre-set repetition rate (Hz)	*freq.°°--.--°Hz*
C"CRLF"	Lamp shot counter (9 digits)	*ct°LP°---------*
UC"CRLF"	Lamp User's shot counter (9 digits)	*cu°LP°---------*

Flashlamp parameters (Programming)

LPM0"CRLF"	Sets trigger Flashlamp mode Valid range: 0 – 1 (Internal trigger= 0 or External trigger = 1)	*LP°synch°:°°0°°*
V1150"CRLF"	Flashlamp voltage (V) Valid range: 500 – 1800 & Vmin < V < Vmax (factory set limits)	*voltage°°1150°V*

F4000"CRLF"	Sets repetition rate (Hz) Valid range: 1 – 9999	*freq.°°40.00°Hz*
UC0"CRLF"	Reset Lamp User's shot counter	*cu°LP°000000000*
ENE212"CRLF"	Sets flashlamp energy (J) Valid range : 7 – 23 NB: Affects flashlamp voltage value (Depends on capacitor and average voltage values)	*energy°°°°21.2J*
CAP293"CRLF"	Sets capacitor value (µF) Valid range : 27 – 33 NB: Affects flashlamp voltage value (Depends on energy and average voltage values)	*capacity°29.3uF*

M SIMMER

Flashlamp (Activation - Deactivation)

A"CRLF"	Activates automatic fire of lamp in the preselected operating mode	
	- lamp internal triggers Q-S programmed in internal trigger	*fire°auto°°°°°°*
	- lamp in internal trigger & Q-S programmed in external trigger	*fire°auto°°°°e°*
	- lamp in external trigger & Q-S programmed in internal trigger	*fire°ext°°°°°°°*
	- lamp in external trigger & Q-S programmed in external trigger	*fire°ext°°°°°e°*
S"CRLF"	Stops automatic internal or external lamp firing	
	- Q-S programmed in internal trigger	*standby°°°°°°°°*
	- Q-S programmed in external trigger	*standby°°°°°°e°*

M"CRLF"	Set the lamp on Simmer in the preselected operating mode	
	- lamp in internal trigger & Q-S programmed in internal trigger	*simmer°°°°°°°°°*
	- lamp in internal trigger & Q-S programmed in external trigger	*simmer°°°°°°°e°*
If interlock when Flashlamp activation	water flow	*water°flow°°°°°*
	Water level	*water°level°°°°*
	lamp connector	*lamp°connector°*
	auxiliary connector	*aux°connector°°*
	external safety interlock	*I/O connector*
	temperature too low	*tp°CG°<°##°d*
		tp°CG°<°###°F
	cover cabinet opened	*switch°cabinet°*

Q-switch parameters (reading)

QSM"CRLF"	Read Q-S mode	*QS°mode° :°°°-°°*
QSF"CRLF"	Read Q-S F/n in auto mode	*cycle°rate°F/--*
QSP"CRLF"	Read Q-S the number of pulses in burst mode	*burst°QS°°°°---*
QOF"CRLF"	Turns Q-Switch ON or OFF	*QS°at°run°°°°°-*
CQ "CRLF"	Q-Switch shot counter (9 digits)	*ct°QS°---------*
UCQ "CRLF"	Q-S User's shot counter (9 digits)	*cu°QS°---------*
W "CRLF"	Delay between flashlamp & Q-S	*delay°°°°---°uS*

Q-switch parameters (Programming)

QSM1"CRLF"	Sets Q-S mode burst Auto = 0, Burst = 1 and Ext = 2	*QS°mode° :°°°1°°*
QSF10"CRLF"	Set Q-S F/10 Valid range: 1 to 99	*cycle°rate°F/10*
QSP50"CRLF"	Sets Q-S 50 bursts Valid range: 1 to 999	*burst°QS°°°°050*
QOF1"CRLF"	Turns Q-Switch ON Valid range: 0 – 1 (0=OFF, 1=ON)	*QS°at°run°°°°°1*
UCQ0"CRLF"	Reset Q-Switch User's shot counter	*cu°QS°000000000*
W225 "CRLF"	Sets QS-Flash delay in µs Valid range : 100µs to 999 µs & Wmin < W< Wmax (factory set limits)	*delay°°°°225°uS*

Q-switch (Activation - Deactivation)

PQ"CRLF"	Start Q-Switch laser emission in the preselected operating mode	
	- lamp activated in internal trigger & Q-S activated in internal trigger	*fire°auto°°°qs°°*
	- lamp activated in internal trigger & Q-S activated in external trigger	*fire°auto°°°qse°*
	- lamp activated in external trigger & Q-S activated in internal trigger	*fire°ext°°°°qs°°*
	- lamp activated in external trigger & Q-S activated in external trigger	*fire°ext°°°°qse°*

SQ"CRLF"	Stop Q-Switch laser emission - lamp activated in internal trigger & Q-S programmed in internal trigger - lamp activated in internal trigger & Q-S programmed in external trigger - lamp activated in external trigger & Q-S programmed in internal trigger - lamp activated in external trigger & Q-S programmed in external trigger	 *fire°auto°°°°°°°* *fire°auto°°°°°e°* *fire°ext°°°°°°°°* *fire°ext°°°°°°e°*
OQ"CRLF"	Single pulse Q-S laser emission in the preselected operating mode - lamp activated in internal trigger & Q-S activated in internal trigger - lamp activated in internal trigger & Q-S activated in external trigger - lamp activated in external trigger & Q-S activated in internal trigger - lamp activated in external trigger & Q-S activated in external trigger	 *fire°auto°°°qs°°* *fire°auto°°°qse°* *fire°ext°°°°qs°°* *fire°ext°°°°qse°*
If interlock when Q-Switch activation	wait n pulses following flashlamp activation Temp° below than the preset value Q-switch stop : end of time out Only MPS version shutter closed	*wait°for°QS°°°°* *tp°CG°<°--°d°°°* *tp°CG°<°###°F* *time°out°QS°°°°* *interlock°QS°°°* *shutter°closed°*

Safety devices

IF"CRLF" or *IF1*"CRLF" Test flashlamp safety interlock *IF1°ab°cd°ef°gh*

a	*0*	*c*	*d*	*e*	*f*	*g*	*0*

a=1 low water flow in the closed laser circuit managed by the cooling group
c=1 water level
d=1 lamp connector head is off
auxiliary connector head is off *e=1*
external safety interlock (I/O connector) *f=1*
switch cover cabinet opened *g=1*

IF"CRLF" or *IF2*"CRLF" Test flashlamp safety interlock *IF2°ab°cd°ef°gh*

0	*0*	*c*	*d*	*0*	*f*	*0*	*0*

c=1 capacitor loading fail
d=1 Simmer fail to initiate

laser water Temp° below than the preset value *f=1*

When all safety interlocks of flashlamp are OK :

IF"CRLF" Test flashlamp safety interlock *IF.°00°00°00°00*

IQ"CRLF" Test Q-Switch safety devices *IQS°ab°cd°ef°gh*

a	*b*	*0*	*0*	*0*	*0*	*g*	*0*

a=1 Emission inhibited for many pulses following flashlamp activation

b=1 laser water Temp° below than the preset value

shutter closed *g=1*

IHG"CRLF"	Test temperature HG If = 0 temperature is OK	*IHG°°°°°°°°°°°-*

Flashlamp parameters (Reading)

VMO"CRLF"	Average voltage lamp	*voltage°m----°V*
D"CRLF"	idle fire	*dis°charg°-.--S*
E"CRLF"	enable fire	*ena°charg°-.--S*
SN"CRLF"	Serial number	*S/Number°°°°---*

Flashlamp parameters (Programming)

D10"CRLF"	idle fire 1.0 seconde	*dis°charg°03.5S*
D0"CRLF"	Continue operating	*dis°charg°00.0S*
E25"CRLF"	enable fire 2.5 (2.5 secondes)	*ena°charg°03.5S*
E0"CRLF"	Continue operating	*ena°charg°00.0S*

Q-switch parameters (Reading)

WMN"CRLF"	Below limit delay QS	*dly°QS°m°---°uS*
WMX"CRLF"	Above limit delay QS	*dly°QS°M°---°uS*
QSW"CRLF"	Number of pulses to wait after starting the lamp before enabling the q-switch	*QS°wait°:°°---*

Q-switch parameters (Programming)

WMN150"CRLF"	Below limit delay QS Valid range: 100 – 999 & not configuration 4 & Wmin < W < Wmax	*dly°QS°m°150°uS*
WMX350"CRLF"	Above limit delay QS Valid range: 100 – 999 & not configuration 4 & Wmin < W < Wmax	*dly°QS°M°350°uS*
QSW100"CRLF"	Sets the number of pulses to wait after starting the lamp before enabling the Q-Switch	*QS°wait°:°°100*

COOLER GROUP
By: Darin Hotvedt, Bob Lawton
Date: 8/21/03

SCOPE

This section will expand on components and specific issues dealing with the maintenance and repair of the cooler group of the 199D9003 Power Supply.

TOPICS

COMPONENT IDENTIFICATION

The following is a list of major components ordered in the direction of flow:

- Reservoir
  - Level sensor
  - Temp. sensor
  - Vent/fill connections
- Pump
- Heater
- DI cartridge
- Coolant lines
- Large particle filter
- Heat exchanger
- Flow sensor
- Cooler group control board (electrical)

Also, refer to attached plumbing diagram

MAINTENANCE ITEMS

Maintenance items are those items identified as having a defined replacement interval and easily performed by service personal in the field.

- DI filter
- Air filter

REPAIR ITEMS

Repair items may include but not limited to the following:

Pump – Replacement of worn gears. This may even be considered a maintenance item but it's frequency is anticipated to be very low, maybe one or two times over the life of the product.
Heater – Malfunction of GFCI power source due to internal moisture.
Heat exchanger – Leakage due to freezing of coolant during shipping (inproper draining).
Flow sensor – Moving parts may wear out.
Backlight LED's – Replacement of LED harness due to burned out LED
Leaks – Broken seal at fitting. Broken glue/weld joint.

REFERENCES

Plumbing Diagram
Pump rebuild kit instructions (provided by Micropump)

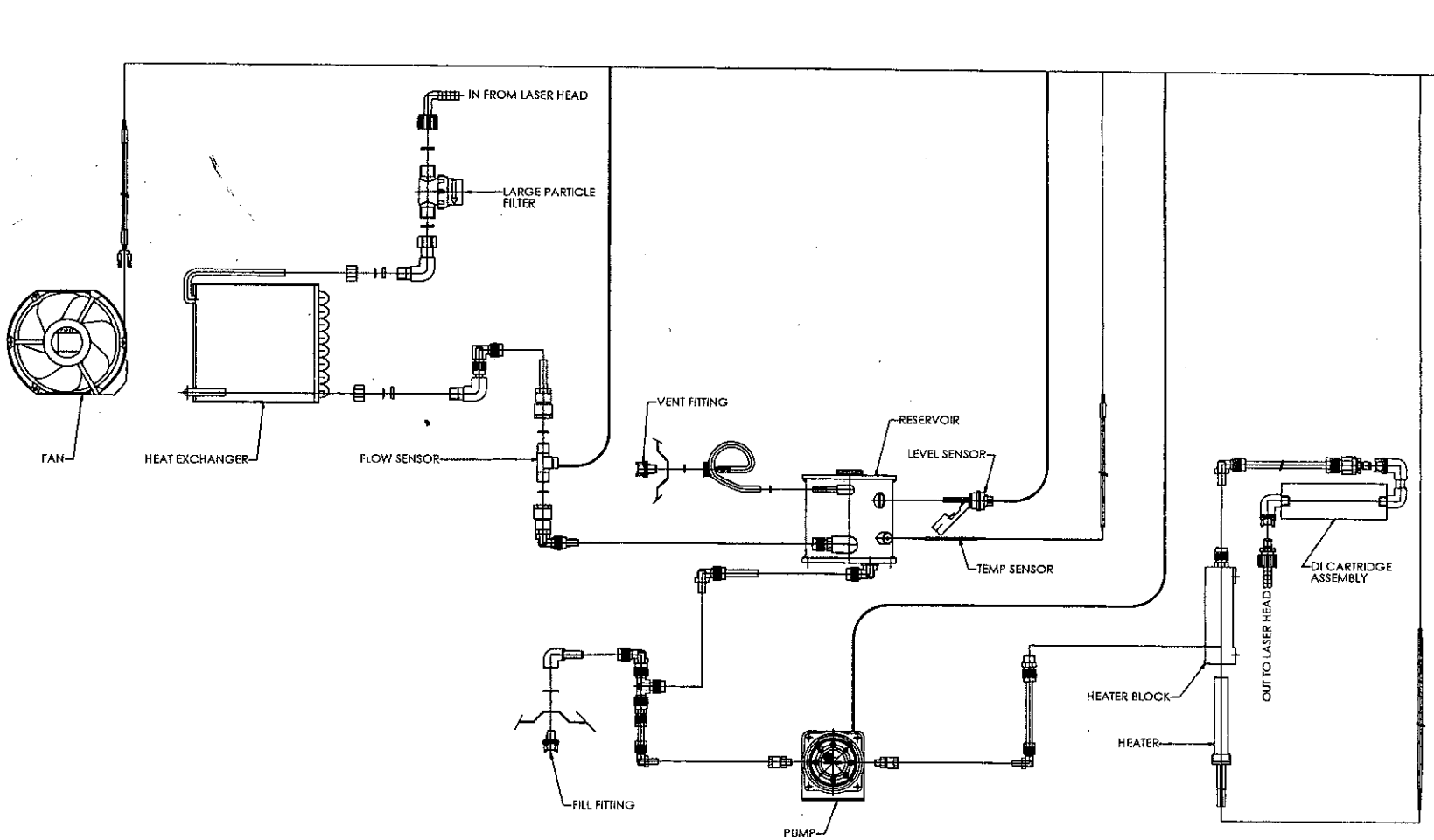

REVISIONS

ECO	REV	ZONE	DESCRIPTION	DATE	APPROVED

QTY REQD	FSCM NO.	PART OR IDENTIFYING NO.	NOMENCLATURE OR DESCRIPTION	MATERIAL SPECIFICATION

PARTS LIST

UNLESS OTHERWISE SPECIFIED DIMENSIONS ARE IN INCHES
TOLERANCES ARE:
FRACTIONS ± DECIMALS .XXX ±.015 .XXXX ±.005 ANGLES ± 1/2°

MATERIAL

FINISH

DO NOT SCALE DRAWING

APPROVALS | DATE
DRAWN D HOTVEDT 8/14/03
CHECKED

Big Sky Laser
BIG SKY LASER TECHNOLOGIES, INC.
P.O. BOX 8100
401 HAGGERTY LANE, UNIT C
BOZEMAN, MT 59715 U.S.A.

PLUMBING DIAGRAM, COOLER GROUP

SIZE D | FSCM NO. | DWG. NO. Plumbing Diagram | REV. 1
SCALE 1:3 | SHEET 1 of 2

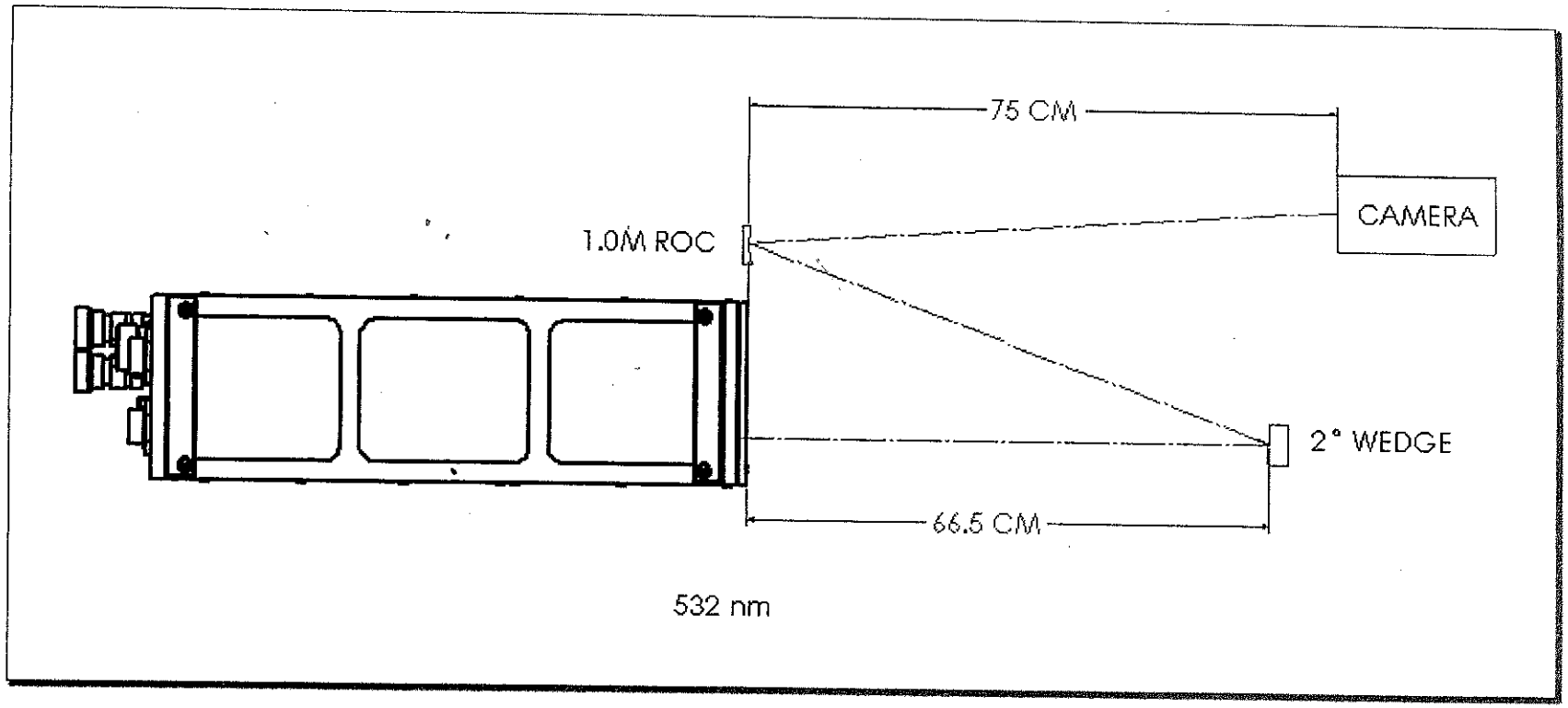

Optical Bench Setup: 532nm Output Beam

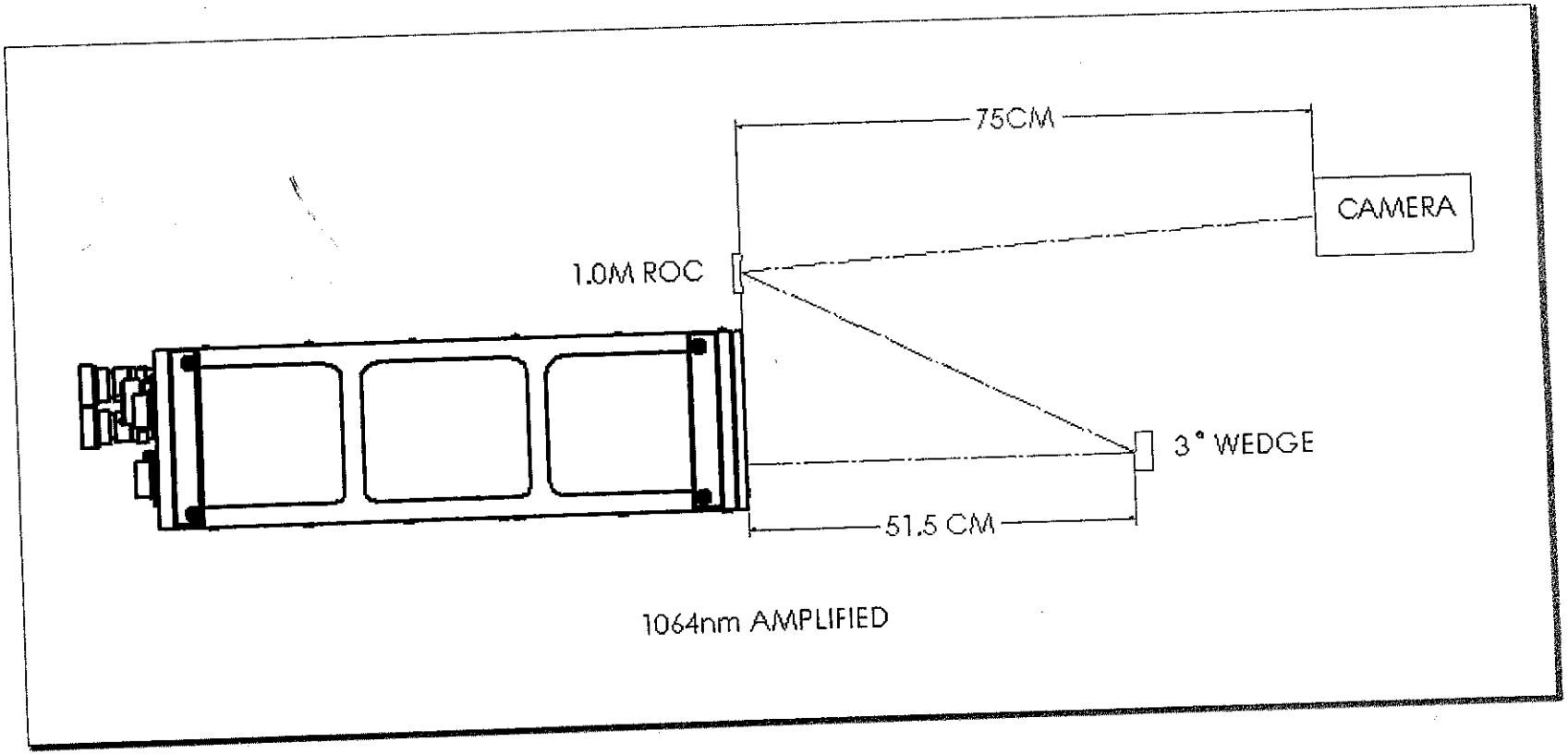

Optical Bench Setup: Amplifier Output Beam Imaging
(Move laser head forward 114mm to image the amplifier input beam)

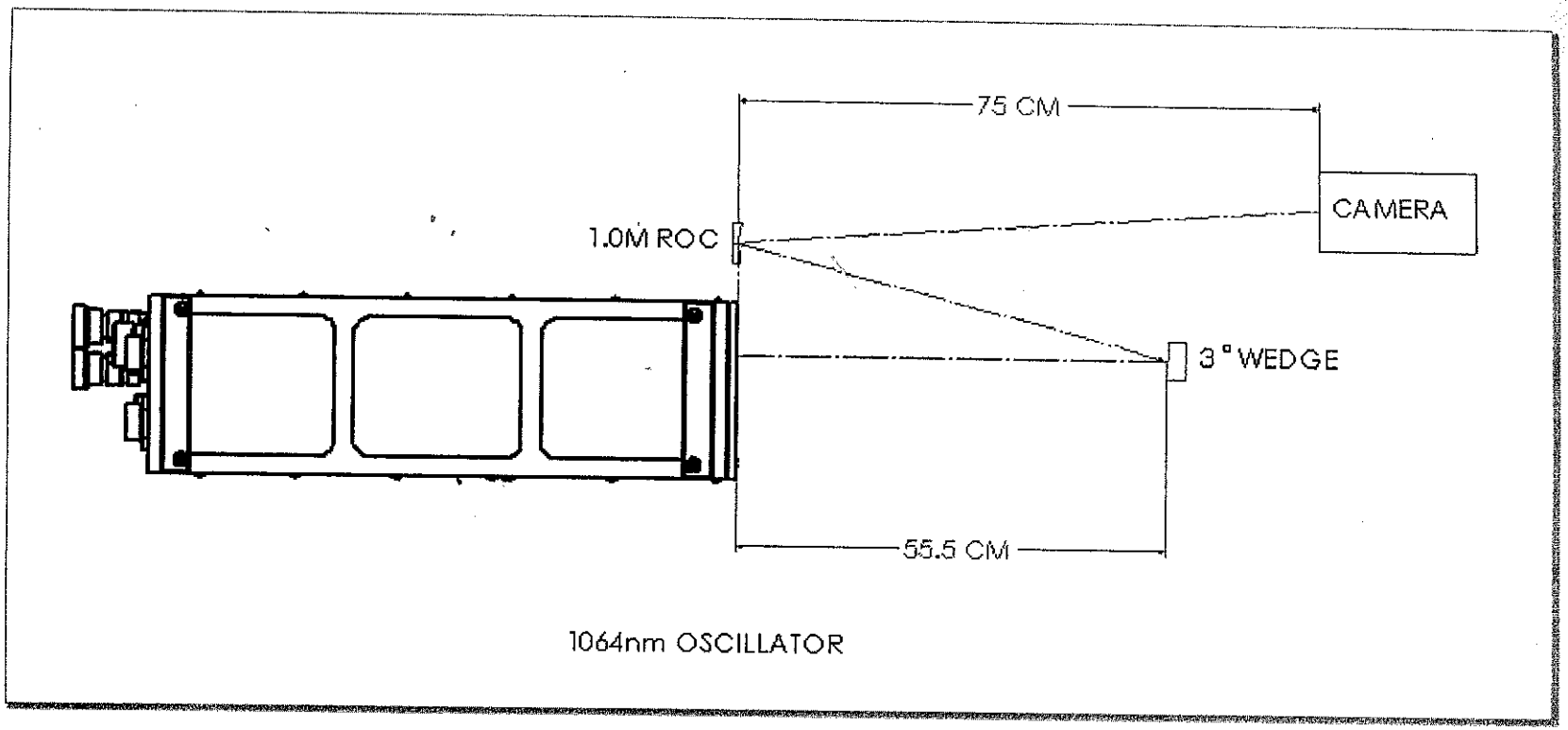

Optical Bench Setup: Oscillator Output Beam

Big Sky Laser Quantel

CN# 605 POWER SUPPLY INCOMING ACCEPTANCE

POWER SUPPLY S/N:_____

SYSTEM PN: **00148000** Rev ___
SYSTEM S/N: _____

I. Visual Inspection

	Pass/Yes	Fail/No
1. Condition of shipping container	☐	☐
2. Quantel Final Test Sheet	☐	☐
3. Condition of paint/silkscreen	☐	☐
4. Condition of frame	☐	☐
5. D-Ring Hardware on Water Level Panel	☐	☐
6. Connector orientation correct	☐	☐
7. Umbilical length correct	☐	☐
8. Locking mechanism on all hardware	☐	☐
9. All screws are tight (√PFN Inductor)	☐	☐
10. Hose clamps are present/tight (6 plc)	☐	☐
11. Cover switch orientation correct	☐	☐
12. Marking and Labels (12 plc)	☐	☐
13. External cable shields are grounded	☐	☐
14. Condition of Circuit boards	☐	☐

II. Documentation

Quantel Cabinet Identification: EC.BSS
Quantel Part Number: 4/300/0617

	Pass/Yes	Fail/No
1. PFN Capacitor Value: label: _____ µF		
2. Software Version: _____.		
3. PFN Cap Software value matches label	☐	☐
4. Software S/N matches label	☐	☐

III. Functional Tests

	Pass/Yes	Fail/No
1. P/S powers up w/pump inactive (level Intlk)	☐	☐
2. Top LED (green) illuminated	☐	☐
3. Rinse and fill reservoir with distilled water	☐	☐
4. RS-232 Serial connection functional	☐	☐
5. Coolant flow >=22counts and the max. coolant pressure <=40psi with coldside (blue) hose disconnected from head	☐	☐
6. Inspect for coolant leaks	☐	☐
7. CG control verified	☐	☐
8. HV activates and lamp flashes	☐	☐
9. Bottom LED (amber) illuminated	☐	☐
10. Q-Switch function checked with FIX19909	☐	☐
11. All interlocks functional	☐	☐
12. CG temperature setpoint verified	☐	☐
13. HG temperature sense verified	☐	☐
14. Energy Calibration verified	☐	☐
VOS Value_____ VIS Value_____ (Save Config)		
Recal VOS Value _____ VIS Value_____ (Save)		
15. HV dump less than 5 sec.	☐	☐
16. External triggers verified	☐	☐
17. 20 Minute Burn-In completed	☐	☐
18. Operational configuration saved	☐	☐
19. Serial Comm. Switch set to RS-485	☐	☐

Notes: _____

Tested by: _____ Date: _____

ACCEPT ☐ REJECT ☐

Big Sky Laser Quantel

00148300 DATA SUMMARY

System PN 00148300

System SN _____

Customer # 605

All data taken at 532 nm and 28 Hz continuous

Pump Energy (J)	Pulse Energy (mJ)
12.0	
13.0	
14.0	
15.0	
16.0	

____ Beam Diameter 4.7 +0.2/-0.4 mm

____ Beam Divergence < 10.0 mrad at 125 mJ

____ Pulse width < 6.5 ns at 125 mJ

____ Energy at First Shot > 100 mJ

____ Beam Location within 0.5 mm

____ Input Energy to achieve 125mJ _____

____ Near Field Profile Attached

____ Far Field Profile Checked

____ Temporal Profile Attached

____ De-polarization Loss (%): _____

____ Beam angle within 100 μrad

	Cal. Due Date		Test Power Supply SN
___ Station #1 - Scientech Meter - SN Head/Body	3627/1521	_____	019/_____
___ Station #2 - Scientech Meter - SN Head/Body	3626/1520	_____	028/_____
___ Station #3 - Scientech Meter - SN Head/Body	3628/1522	_____	038/_____
___ Station #4 - Scientech Meter - SN Head/Body	3726/1039	_____	013/_____
___ Lecroy 9361 SN	1872	_____	
___ Thorlabs Detector	DET210	NA	

Additional Notes: _____

Verified By: _____

Date: _____

Big Sky Laser Quantel

00148300 LASER HEAD BUILD AND CHARACTERIZATION (CN#605)

Test Power Supply SN _____ Laser Head SN _____

Laser Performance Verification

1. ___ Laser aligns and long pulse operation verified – beam >80% round
2. ___ Hold-off is at least 4J above maximum operating output of 100mJ
3. ___ Q-Switch operation verified
4. ___ Pump energy to achieve 100mJ/pulse from oscillator (do not exceed 17.0J)
   _____ Joules
5. ___ Tilt wedge and fold mirror assy installed, amplifier aligned in long pulse, holdoff reset for q-switch mode
6. ___ Output energy at pump energy in #4 after amplifier aligned
   _____ mJ of 1064nm
7. ___ Output energy at pump energy in #4 after doubler, dichroics, tilt wedge, beam dump, and output window installed and aligned. _____ mJ of 532nm
8. ___ Telescope installed and aligned with no more than 5% drop in 532nm energy, hold off checked and still >4J above pump energy in #4
9. ___ Reference block installed and aligned
10. ___ Output beam bore-sighted
11. ___ Record pump energy to achieve 125mJ of 532nm output
    _____ Joules
___ Overnight burn-in completed, profile checked and no more than 5 % drop in energy

Final Procedures Verification

1. ___ Lamp detector board peak voltage set to 4.0 ±0.2V
2. ___ Data Summary Form completed **(10-F-081)**
3. ___ All set screws tack bonded, wires tied down, and desiccant in head
4. ___ All covers installed, head purged with dry Nitrogen
5. ___ Coolant drained from head

Additional Notes: _____

Verified By: _____ Date: _____

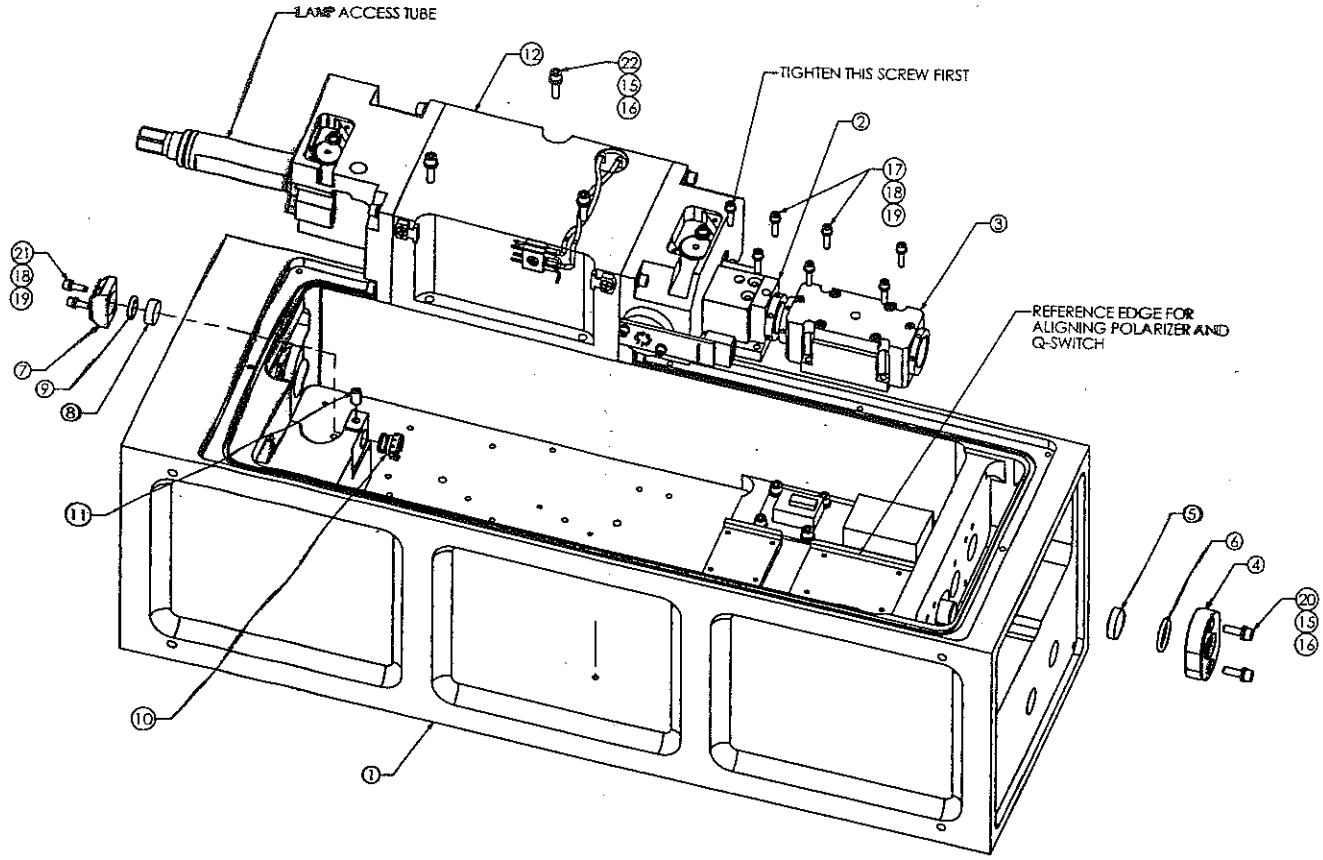

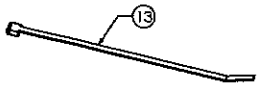

STAGE II BUILD:

1. INSTALL FOLD PRISM (40) AND ASSOCIATED PARTS. PROVIDE APPROXIMATELY 1/32" GAP BETWEEN END OF FOLD PRISM AND HOUSING.
2. INSTALL O-RING (37) IN O-RING GROOVE ON I/O END COVER ASSEMBLY (33). INSTALL I/O HARNESS CONNECTOR INTO I/O END PLATE ASSEMBLY (33) AND TIGHTEN NUT WITH 1- 3/16" SOCKET. CONNECT HARNESS GROUNDING LEAD TO GROUNDING POINT ON BACK FACE OF COVER. REFER TO ASSEMBLY DRAWING 00148360 FOR GROUNDING LUG HARDWARE SPECIFICATION.
3. INSTALL I/O ENDPLATE ASSEMBLY. APPLY A THIN FILM OF BRAYCOTE TO COOLANT TUBE O-RINGS REMOVING ANY EXCESS LUBRICANT. FEED HV HARNESS WIRES THROUGH END OF HOUSING INTO PUMP CAVITY POCKET AND CAREFULLY POSITION ENDPLATE ASSEMBLY INTO PLACE. USE CAUTION NOT TO TOUCH FOLD PRISM WITH LUBRICATED O-RINGS.
4. INSERT LAMP TERMINAL ALIGNMENT TOOL, PN F(X14552, INTO PUMP CAVITY AND CONNECT HV LAMP LEADS TO PUMP CAVITY. INSURE HV HARNESS LUGS ARE CENTERED IN GROOVE OF ENDCAPS AFTER TIGHTENING LAMP TERMINAL SCREWS. SEE HARNESS SECURING DETAIL. PLUG TRIGGER TRANSFORMER AND THERMISTAT HARNESS CONNECTORS INTO MATING CONNECTORS ON SIDE OF P CAVITY AND SECURE WITH SCREW (52).
5. REMOVE LAMP TERMINAL ALIGNMENT TOOL AND INSERT LAMP ASSEMBLY, PN 00145535 (NOT SHOWN
6. INSTALL LASER HEAD HANDLES (98) REFERING TO STAGE IV BUILD INSTRUCTIONS ON SHEET 2 OF 2.
7. INSTALL LAMP ACCESS COLLAR (34) AND ASSOCIATED PARTS. ENSURE COLLAR IS CENTERED WITH RESPECT TO LAMP ACCESS TUBE MOUNTED TO PUMP CAVITY AND FREE OF LATERAL STRESS AS SCREWS (46) ARE TIGHTENED.
8. ALIGN OSCILLATOR PER PROCEDURE 10-P-077.
9. INSTALL FOLDING MIRROR (39) AND TILT WEDGE (38) ASSEMBLIES. ENSURE TILT WEDGE OPTICS ARE COATED FOR INFRA-RED (1064 nm).
10. ALIGN AMPLIFIER PER PROCEDURE 10-P-077.

ITEM NO.	QTY.	PART NO.	DESCRIPTION
24	2	81040302	4-40 X 1/4 SHCS
25	10	81310300	WASHER, SPLIT LOCK, #4
26	8	81300301	#4 - RED. OD FLAT WASHER
27	4	81040202	2-56 X 1/4 SHCS
28	7	81310200	WASHER, SPLIT LOCK, #2
29	7	81300201	#2 - RED. OD FLAT WASHER
30	2	81330300	WASHER, LOCK, EXT TOOTH, #4
31	1	00145455	CLAMP, DOVETAIL
32	1	00145450	ASSY, FOLD PRISM
33	1	00148360	ASSY, I/O END PLATE
34	1	00148327	COLLAR, LAMP ACCESS
35	1	00148328	CAP, LAMP ACCESS
36	1	86202021	O-RING, EPR, 2-021
37	1	86402048	O-RING, VITON 75, 2-048
38	1	00114100	ASSY, TILT WEDGE
39	1	00141080	ASSY, TURNING MIRROR
40	1	90100004	PRISM, FOLD, AR @ 1064, 1.776 TRUNCATED
41	1	00145453	COVER, FOLD PRISM, 1.776
42	1	00145452-1	RETAINER, FOLD PRISM, NARROW
43	1	86300104	104 O-RING STOCK
44	1	86302108	O-RING, VITON 50, 2-108
45	2	81040305	4-40 X 7/16 SHCS
46	3	81040203	2-56 X 5/16 SHCS
47	4	81040406	6-32 x 1/2 SHCS
48	4	81310400	WASHER, SPLIT LOCK, #6
49	4	81300401	#6 - RED. OD FLAT WASHER
50	6	81040308	4-40 X 5/8 SHCS
51	1	84990204	2-56 X 3/8 FHP, NYLON
52	1	81020204	2-56 x 3/8 FHPS
53	1	86302116	O-RING, VITON 50, 2-116
		490090112	BRAYCOTE GREASE

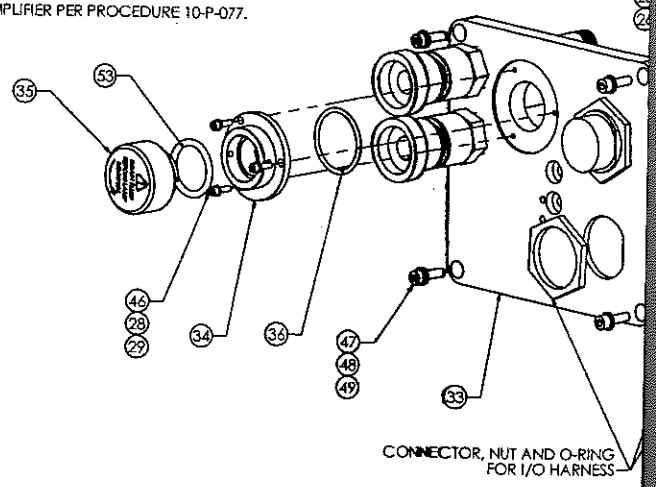

REVISIONS					
ECO	REV	ZONE	DESCRIPTION	DATE	APPROVED
03-173	A	ALL	RELEASE TO PRODUCTION	6/19/03	D HOTVEDT

NO.	QTY.	PART NO.	DESCRIPTION
1	1	77700075	ASSY, WIRED HOUSING
2	1	17005400	ASSY, ASCP, ULTRA
3	1	17005300	ASSY, Q-SWITCH, ULTRA
4	1	19001011	RETAINER, 15mm x 1/8, .940 SPACING
5	1	90010032	MIRROR, HR, 1064, R1.4
6	1	86302013	O-RING, VITON 50, 2-013
7	1	00141013	RETAINER, 10mm X 3.175mm
8	1	90110050	OC, 1064, 10%, 10mm X 3.175mm
9	1	86302010	O-RING, VITON 50, 2-010
10	1	00145225	ASSY, 1/4 WAVEPLATE, 10MM RETAINER
11	1	84090402	SCREW, SHSS, 6-32 x 1/4", NYLON-TIPPED
12	1	00145500	ASSY, PUMP CAVITY
13	1	73400011	CABLE TIE, 4"
15	5	81310300	WASHER, SPLIT LOCK, #4
16	5	81300301	#4 - RED. OD FLAT WASHER
17	7	81040204	2-56 X 3/8 SHCS
18	9	81310200	WASHER, SPLIT LOCK, #2
19	9	81300201	#2 - RED. OD FLAT WASHER
20	2	81040304	4-40 X 3/8 SHCS
21	2	81040202	2-56 X 1/4 SHCS
22	3	81040305	4-40 X 7/16 SHCS
23	1	84990204	2-56 X 3/8 FHP, NYLON

STAGE I, OSCILLATOR BUILD
CLEAN ALL PARTS PER CLEANING PROCEDURE 09-P-009
TIGHTEN HARDWARE TO STANDARD TORQUE RANGES PER 09-P-010
READ THE FOLLOWING PROCEDURE ENTIRELY BEFORE PROCEEDING.

ASSEMBLY NOTES:

1. INSTALL WAVEPLATE ASSEMBLY (10), SET SCREW (11), OUTPUT COUPLER (8) AND ASSOCIATED PARTS PAYING ATTENTION TO LOCATION OF O-RING (9) WITH RESPECT TO OUTPUT COUPLER AND HOUSING (1).
   NOTE: IT IS IMPORTANT THAT WAVEPLATE ASSEMBLY IS INSTALLED PRIOR TO OUTPUT COUPLER.
2. INSTALL HR MIRROR (5) PAYING ATTENTION TO LOCATION OF O-RING (6) WITH RESPECT TO MIRROR AND HOUSING (1).
3. INSTALL ASCP POLARIZER (2) AND Q-SWITCH (3) ASSEMBLIES. HOLD ASSEMBLIES AGAINST ALIGNMENT REFERENCE EDGE WHILE TIGHTENING HARDWARE. TIGHTEN ASCP POLARIZER SCREWS IN ORDER SHOWN. REMOVE TOP OF Q-SWITCH ASSEMBLY DURING INSTALLATION TO AVOID PINCHING WIRES.
4. SECURE Q-SWITCH LEADS TO CABLE TIE MOUNTS WITH CABLE TIES (13) IN LOCATIONS SHOWN. SEE HARNESS SECURING DETAIL BELOW. FEED Q-SWITCH CONNECTOR THROUGH TO OTHER SIDE OF HOUSING AND PLUG INTO Q-SWITCH DRIVER CONNECTOR AND SECURE WITH SCREW (23 - not shown).
5. INSTALL FOLD PRISM ASSEMBLY (32) REFERING TO STAGE II BUILD ILLUSTRATION. IMPORTANT: FOLD PRISM ASSEMBLY MUST BE INSTALLED PRIOR TO PUMP CAVITY (STEP 6).
6. INSTALL PUMP CAVITY ASSEMBLY (12). USE CARE NOT TO DAMAGE FOLD PRISM WHEN INSTALLING PUMP CAVITY. PLUG LAMP DETECTOR HARNESS CONNECTOR INTO LAMP DETECTOR BOARD.
7. CHECK SHUTTER BLADE FOR MOVEMENT RESTRICTIONS DUE TO INTERFERENCE FROM WIRES OR HOUSING WALL. ENSURE SHUTTER BLADE IS SECURELY ATTACHED TO SOLENOID SHAFT.

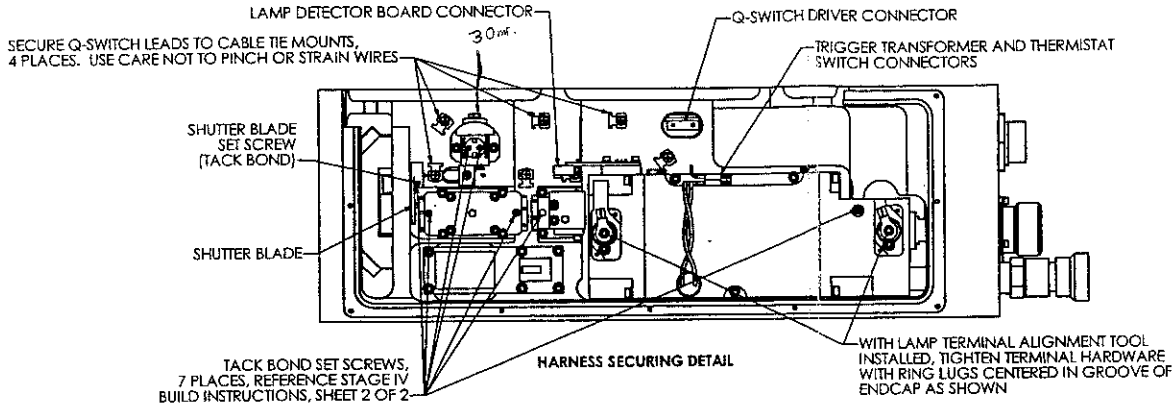

HARNESS SECURING DETAIL

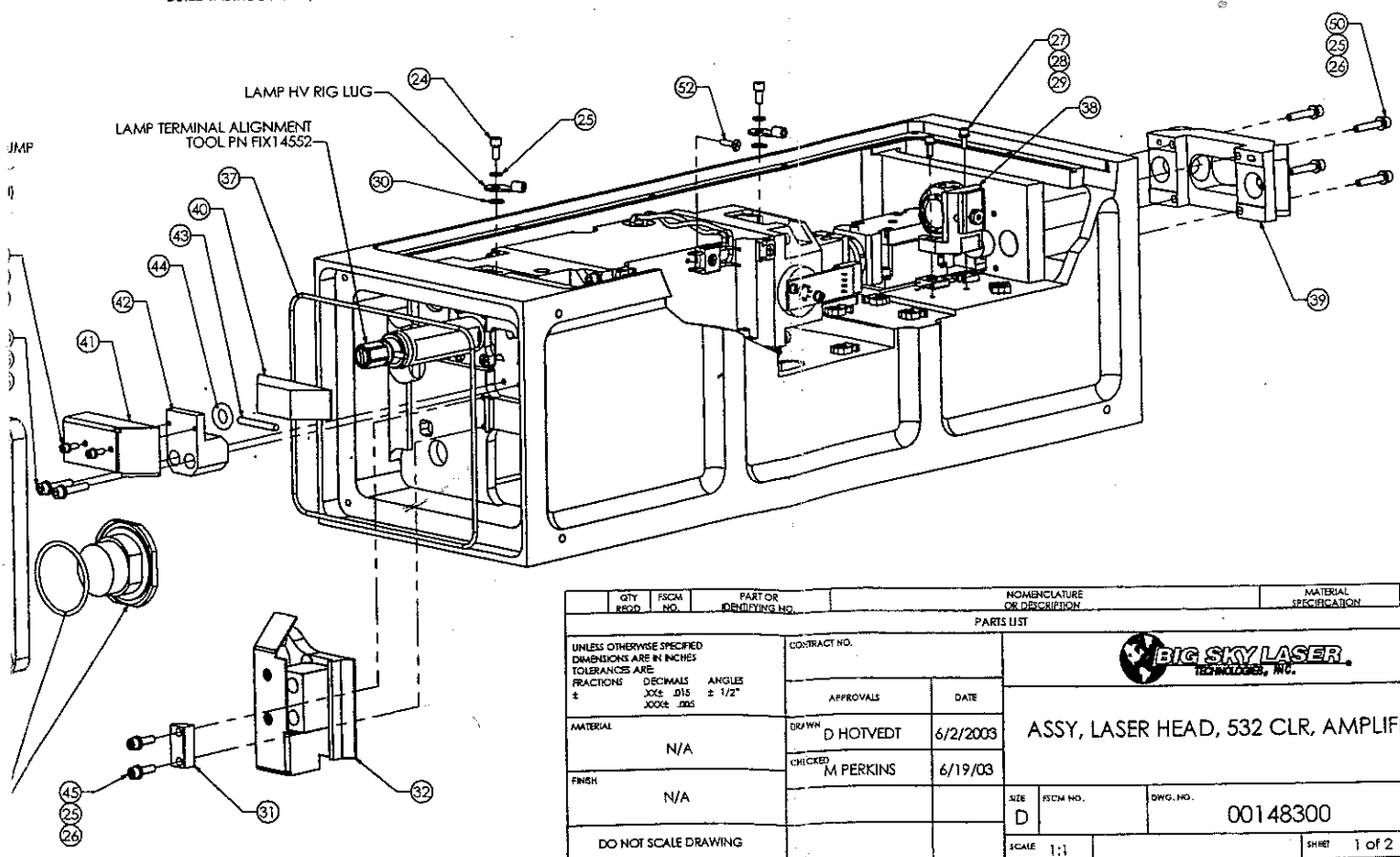

QTY REQD	FSCM NO.	PART OR IDENTIFYING NO.	NOMENCLATURE OR DESCRIPTION	MATERIAL SPECIFICATION

PARTS LIST

UNLESS OTHERWISE SPECIFIED DIMENSIONS ARE IN INCHES
TOLERANCES ARE:
FRACTIONS ± DECIMALS .XX± .015 .XXX± .005 ANGLES ± 1/2°

CONTRACT NO.

APPROVALS	DATE
DRAWN D HOTVEDT	6/2/2003
CHECKED M PERKINS	6/19/03

MATERIAL: N/A

FINISH: N/A

DO NOT SCALE DRAWING

BIG SKY LASER TECHNOLOGIES, INC.

ASSY, LASER HEAD, 532 CLR, AMPLIFIED

SIZE D | FSCM NO. | DWG. NO. 00148300 | REV. A

SCALE 1:1 | SHEET 1 of 2

ITEM NO.	QTY.	PART NO.	DESCRIPTION
60	4	81310200	WASHER, SPLIT LOCK, #2
61	4	81300201	#2 - RED. OD FLAT WASHER
62	1	00147700	ASSY, KTP OVEN, 1064/532, 8X8
63	1	00143215	ASSEMBLY, REFERENCE BLOCK
64	1	00142100	ASSY, 1.35X BEAM REDUCER
65	1	00148317	PLUG, .438 HOLE, SEALED
66	1	00148318	RETAINER, HOLE PLUG
67	1	86602011	O-RING, SILICONE 70, 2-011
68	1	00145700	ASSEMBLY, DUAL DICHROIC
69	1	19001011	RETAINER, 15mm x 1/8, .940 SPACING
70	1	90120004	WINDOW, OUTPUT, AR/AR 532/1064
71	1	86302013	O-RING, VITON 50, 2-013
72	1	00143210	ASSEMBLY, BEAM DUMP, 1064
73	1	00114100-1	ASSY, TILT-WEDGE, 532 COATED OPTICS
74	1	00145315	ASSY, Q-SW DRIVER
75	1	81020206	2-56 x 1/2 FHPS
76	7	81040304	4-40 X 3/8 SHCS
78	9	81310300	WASHER, SPLIT LOCK, #4
79	9	81300301	#4 - RED. OD FLAT WASHER
80	4	81040204	2-56 X 3/8 SHCS
81	2	81040202	2-56 X 1/4 SHCS
82	2	81040305	4-40 X 7/16 SHCS

STAGE III BUILD: DOUBLER POCKET
CLEAN ALL PARTS PER CLEANING PROCEDURE 09-P-009
TIGHTEN HARDWARE TO STANDARD TORQUE RANGES PER 09-P-010

1. INSTALL OUTPUT WINDOW (70) PAYING ATTENTION TO LOCATION OF O-RING WITH RESPECT TO OPTIC AND HOUSING.
2. INSTALL DOUBLER ASSY (62) AND PLUG OVEN CONNECTORS INTO OVEN HARNESS CONNECTOR STACK (ALREADY INSTALLED) AND SECURE WITH SCREW (75). NOTE: OVEN HEATER CONNECTOR LOCATED CLOSEST TO POCKET FLOOR.
3. INSTALL DUAL DICHROIC ASSY (68) WITH MACOR BEAM DUMP TOWARDS Q-SWITCH DRIVER BOARD ASSY. INSTALL 532nm TILT WEDGE ASSY(73), HOLE PLUG (65) AND ASSOCIATED PARTS, AND BEAM DUMP ASSY (72).
4. ALIGN DOUBLER OVEN PER PROCEDURE 10-P-077.
5. INSTALL BEAM REDUCER ASSY (64). WARNING: TO AVOID LASER DAMAGE TO OPTICS, SLIDE ASSEMBLY FULLY TOWARDS OUTPUT END OF POCKET. LOOSEN POSITIVE LENS ADJUSTMENT LOCKING SCREW AND SLIDE FULLY INTO MOUNT. ALIGN PER PROCUDURE 10-P-077.
6. INSTALL REFERENCE BLOCK ASSY (63) AND ALIGN PER PROCEDURE 10-P-077.

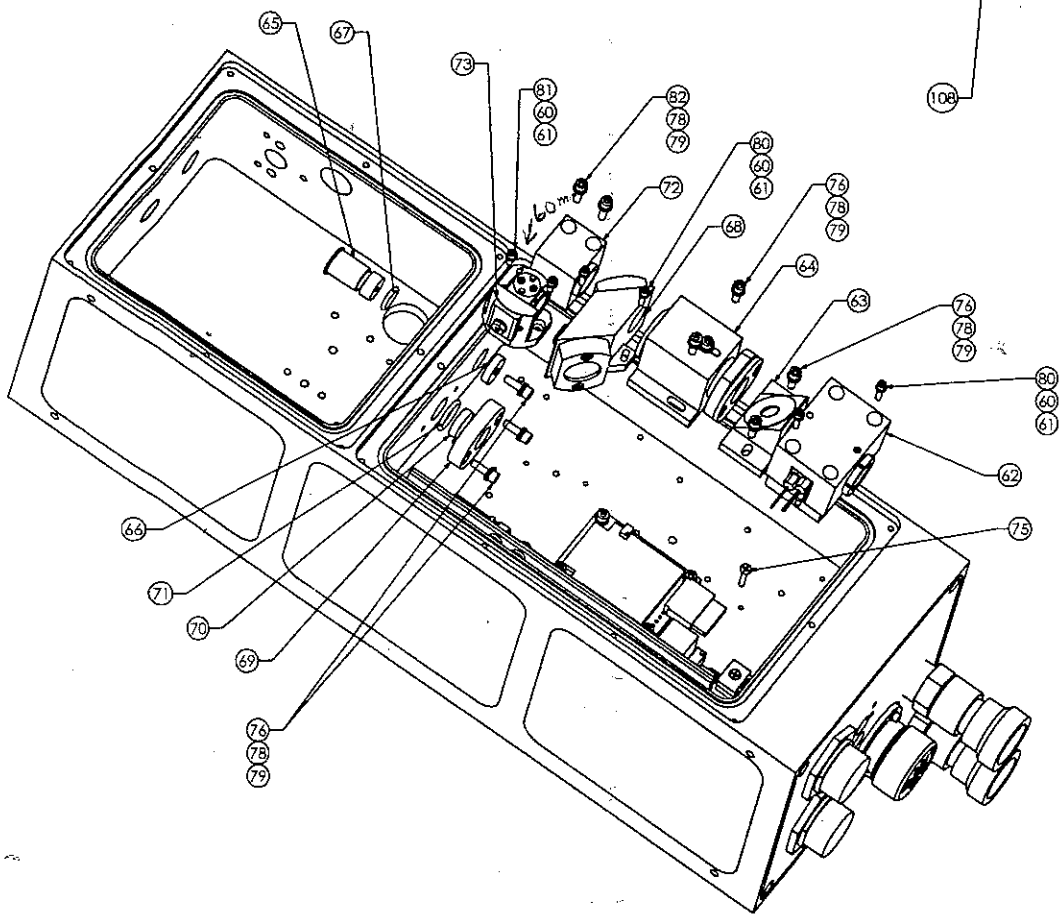

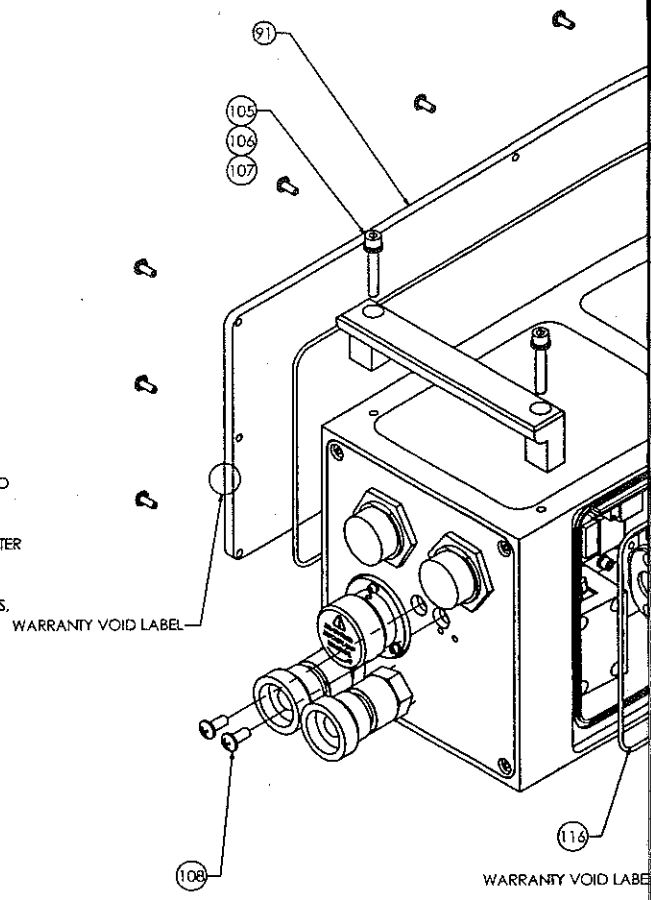

STAGE IV BUILD:

1. TACK BOND ALL WAVEPLA
SHOWN BELOW AND ON S
BALL MOUNT IN ADDITION
2. INSTALL DESICANT PACKA
SHOWN BELOW.
3. APPLY TEFLON PIPE THREAD
BEYOND INSIDE WALL OF P
AND ASSOCIATED HARDW
4. INSTALL COVERS (91, 92, 93
AT TWO LOCATIONS AS SH
5. PURGE HEAD WITH DRY NIT

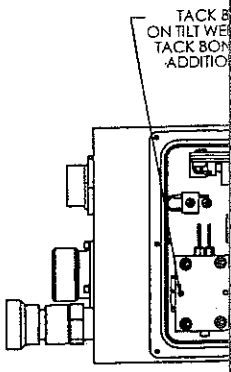

REVISIONS					
ECO	REV	ZONE	DESCRIPTION	DATE	APPROVED
03-173	A	ALL	RELEASE TO PRODUCTION	6/11/03	D HOTVEDT

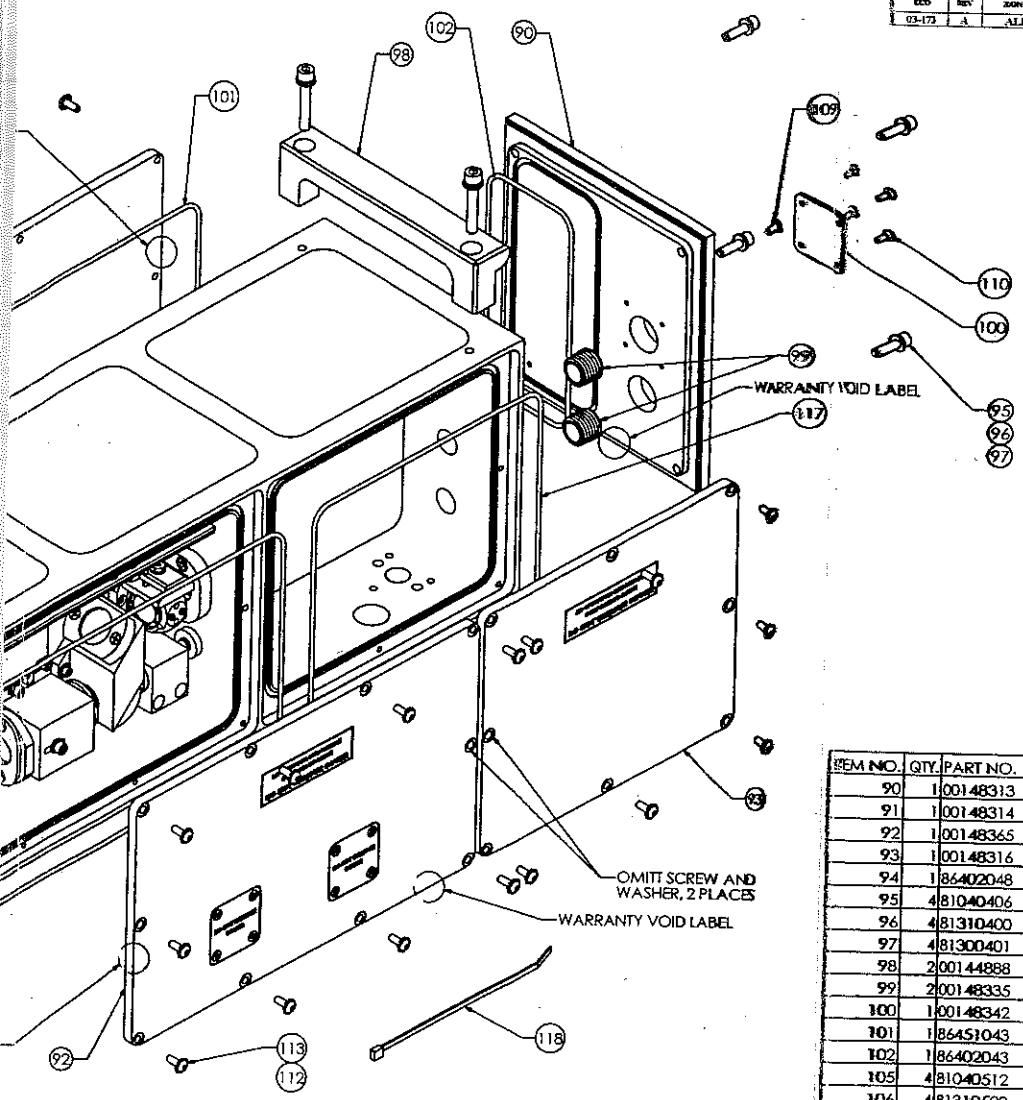

E AND ALIGNMENT WEDGE LOCKING SET SCREWS AND SHUTTER BLADE SET SCREW, LOCATIONS (12 TOTAL) EET 1 OF 2, PER BONDING PROCEDURE 9-P-006. NOTE: FOR 532nm TILT WEDGE, TACK BOND WEDGE HUBS TO O SET SCREWS.

E AND SECURE WITH CABLE TIES (118) TO CABLE TIE MOUNTS

TAPE TO HOLE PLUGS (99) AND INSTALL. NOTE: PIPE PLUGS ARE NOT TO PROTRUDE CKET. INSTALL END COVER (90), O-RING (102), INSPECTION COVER (100) RE.

AND ASSOCIATED O-RINGS AND HARDWARE. OMIT COVER HARDWARE WN. APPLY "WARRANTY VOID" LABELS, PN 84980037, TO AREAS SHOWN (5 PLACES).

OGEN THROUGH SEAL SCREW HOLES. INSTALL SEAL SCREWS (108, 109).

ITEM NO.	QTY.	PART NO.	DESCRIPTION
90	1	00148313	COVER, FRONT END
91	1	00148314	COVER, OSCILLATOR/BEAM EXPANSION POCKET
92	1	00148365	ASSY, DOUBLER POCKET COVER
93	1	00148316	COVER, ACCESSARY POCKET
94	1	86402048	O-RING, VITON 75, 2-048
95	4	81040406	6-32 x 1/2 SHCS
96	4	81310400	WASHER, SPLIT LOCK, #6
97	4	81300401	#6 - RED. OD FLAT WASHER
98	2	00144888	HANDLE, LASER HEAD
99	2	00148335	PLUG ASSY, 1/4 NPT W/ BEAM DUMP
100	1	00148342	COVER, INSPECTION WINDOW
101	1	86451043	O-ring, Viton 75, 10.43 ID
102	1	86402043	O-ring, Viton 70, 2-043
105	4	81040512	8-32 x 1 SHCS
106	4	81310500	WASHER, LOCK, SPLIT, #8
107	4	81300501	#8 - RED. OD FLAT WASHER
108	2	81110504	SCREW, SEAL, 8-32 x 3/8, PHP
109	1	81110302	SCREW, SEAL, 4-40 x 1/4, PHP
110	4	81020202	2-56 x 1/4 FHPS
112	28	81330300	WASHER, LOCK, EXT TOOTH, #4
113	28	81100303	4-40 X 5/16 BHCS
116	1	86457070	O-ring, Viton 70, 7" ID X .070"
117	1	86402050	O-ring, Viton 70, 2-050
118	1	73400011	CABLE TIE, 4"
119	1	77700075	ASSY, WIRED HOUSING
120	1	84990204	2-56 X 3/8 FHP, NYLON
121	1	81020204	2-56 x 3/8 FHPS
	1	72006020	DESICATOR PACK
		72600004	PIPE THREAD TAPE
		40001009	ADHESIVE, UV CURE, NORLAND #123RED
	5	84980037	LABEL, WARR. VOID IF BROKEN, DESTR. VNYL

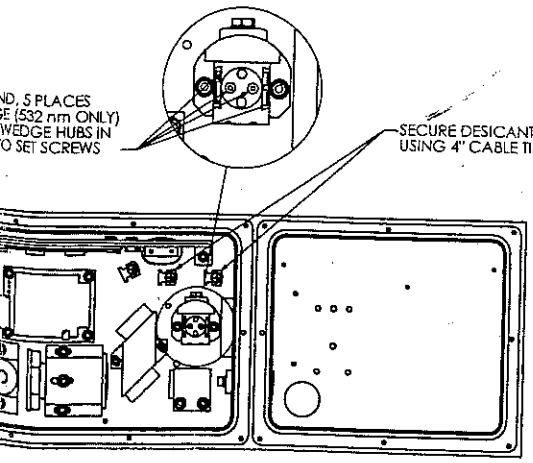

QTY REQD	FSCM NO.	PART OR IDENTIFYING NO.	NOMENCLATURE OR DESCRIPTION	MATERIAL SPECIFICATION

PARTS LIST

UNLESS OTHERWISE SPECIFIED DIMENSIONS ARE IN INCHES
TOLERANCES ARE:
FRACTIONS ± DECIMALS .XX± .015 .XXX± .005 ANGLES ± 1/2DEG

MATERIAL: N/A

FINISH: N/A

DO NOT SCALE DRAWING

CONTRACT NO.

APPROVALS	DATE
DRAWN D HOTVEDT	6/2/2003
CHECKED M PERKINS	6/19/03

BIG SKY LASER TECHNOLOGIES, INC.

ASSY, LASER HEAD, 532 CLR, AMPLIFIED

SIZE D | FSCM NO. | DWG. NO. 00148300 | REV. A

SCALE FULL | SHEET 2 of 2