Link Layer: MAC and ARP

IT5100D AY25/26 S2

NUS National University of Singapore | Computing

© Copyright National University of Singapore. All Rights Reserved.

Link Layer

Services

- Encapsulation of network-layer datagram into link-layer frames
- Transmission onto communication link
- Error detection and correction

Implementation

- In network interface card (NIC; a.k.a. network adapter), or on a chip
- Combination of hardware, software, firmware

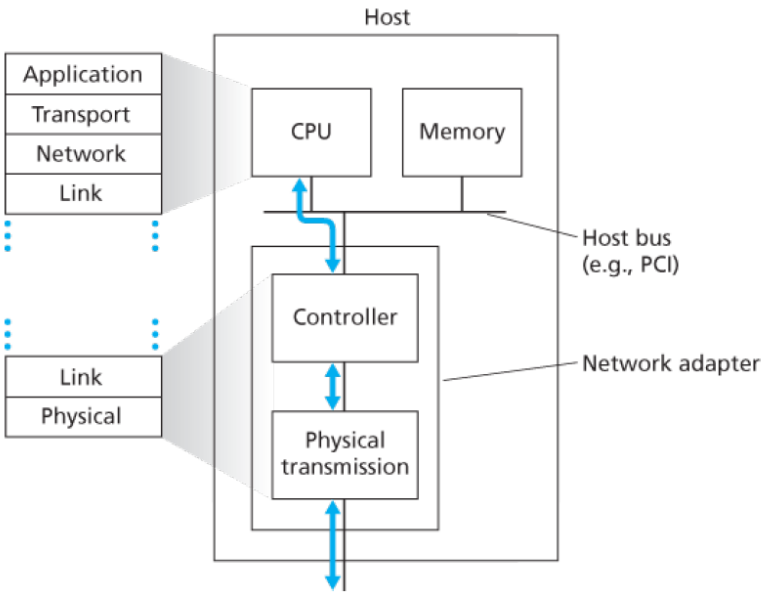

Switched Network – Addressing

Each network interface / adapter (at hosts/routers):

- Has a locally unique IP address for network-layer forwarding (as we've learned)
- Has a unique link-layer address used "locally" to transport frames between physically-connected interfaces (within same network segment / subnet)
  - To support network-layer protocols other than IP

→ The link-layer address: MAC address

→ To translate between IP address and MAC address: Address Resolution Protocol (ARP)

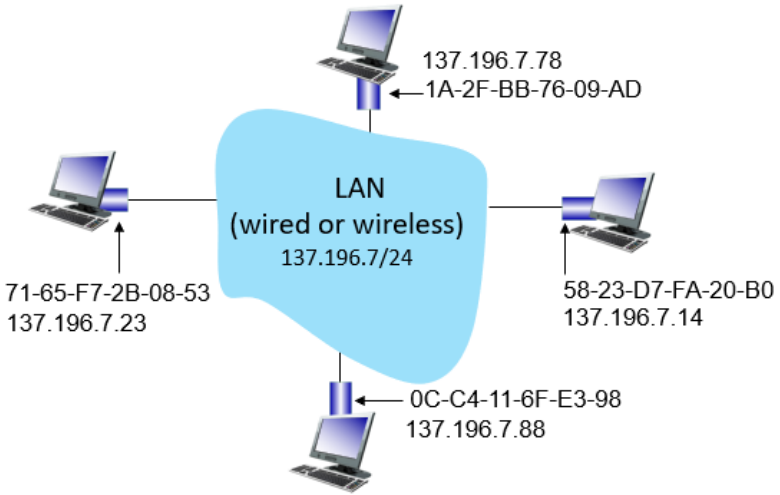

MAC Address (or Physical Address)

- MAC: Media (or Medium) Access Control – a sublayer of the link layer
- Often stored in hardware (burned onto NIC read-only memory), or by firmware mechanism
- Many interfaces now support changing the address via software
  - E.g., to limit privacy issues from associating a device activity with its owner
  - May be used for MAC spoofing, e.g., to bypass MAC address blacklisting, or to impersonate another device

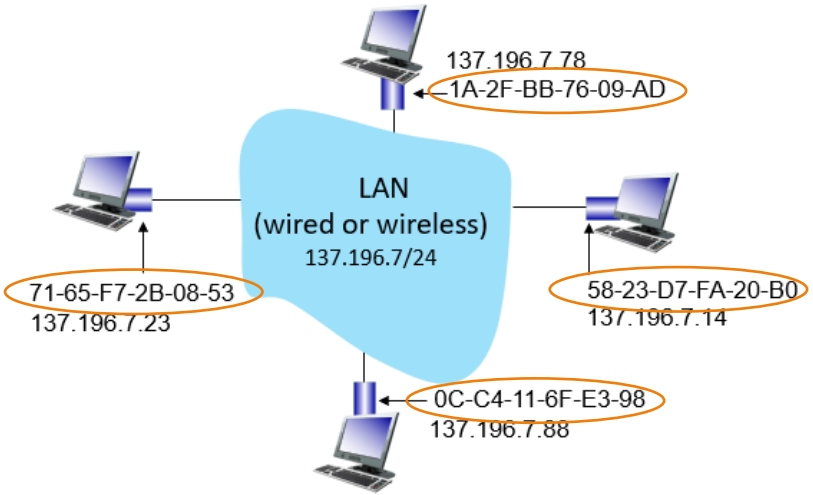

MAC Address

- 48-bit (6-byte) long, typically in hexadecimal notation
  - Usually separated by dashes or colons
- Address space managed by IEEE
  - Flat structure – does not change when moving to another network
  - Unique identifiers allocated to device manufacturers: 24-bit OUI

- Each NIC in the same network must have a unique MAC address
- Two NICs connected to two different networks can share the same MAC address

On Windows: `ipconfig /all`

```
Ethernet adapter Ethernet 4:

   Media State . . . . . . . . . . . : Media disconnected
   Connection-specific DNS Suffix  . :
   Description . . . . . . . . . . . : Fortinet SSL VPN Virtual Ethernet Adapter
   Physical Address. . . . . . . . . : 00-09-0F-AA-00-01
   DHCP Enabled. . . . . . . . . . . : Yes
   Autoconfiguration Enabled . . . . : Yes

Ethernet adapter Ethernet 5:

   Media State . . . . . . . . . . . : Media disconnected
   Connection-specific DNS Suffix  . :
   Description . . . . . . . . . . . : Lenovo USB Ethernet #2
   Physical Address. . . . . . . . . : 08-3A-88-58-0F-2F
   DHCP Enabled. . . . . . . . . . . : Yes
   Autoconfiguration Enabled . . . . : Yes
```

```
Wireless LAN adapter Wi-Fi:

   Connection-specific DNS Suffix  . : comp.nus.edu.sg
   Description . . . . . . . . . . . : Intel(R) Wi-Fi 6E AX211 160MHz
   Physical Address. . . . . . . . . : 98-5F-41-42-73-CC
   DHCP Enabled. . . . . . . . . . . : Yes
   Autoconfiguration Enabled . . . . : Yes
   IPv4 Address. . . . . . . . . . . : 172.25.123.197(Preferred)
   Subnet Mask . . . . . . . . . . . : 255.255.248.0
   Lease Obtained. . . . . . . . . . : Thursday, 20 February 2025 1:38:17 pm
   Lease Expires . . . . . . . . . . : Thursday, 20 February 2025 2:23:22 pm
   Default Gateway . . . . . . . . . : 172.25.120.1
   DHCP Server . . . . . . . . . . . : 137.132.84.151
   DNS Servers . . . . . . . . . . . : 137.132.90.2
   Primary WINS Server . . . . . . . : 137.132.4.25
   Secondary WINS Server . . . . . . : 137.132.4.5
   NetBIOS over Tcpip. . . . . . . . : Enabled
```

Sending within a Subnet

Sending adapter inserts MAC address of destination adapter into the frame, then sends to the link

- If broadcast: special MAC address FF-FF-FF-FF-FF-FF

Receiving switch occasionally broadcasts incoming frame to all its interfaces

Receiving adapter checks if the destination MAC address matches its own

- If yes: extracts the enclosed datagram and passes it up the protocol stack
- If no: discards

© Copyright National University of Singapore. All Rights Reserved.

Address Resolution Protocol

How does the sender know the destination MAC address?

Address Resolution Protocol (ARP)

- RFC 826
- Like DNS, but *only in subnet scope*
- ARP module in sender host checks its ARP table
- If no such entry, broadcast an ARP query for the IP address
- Each adapter who receives the broadcast checks if it matches its IP address
- The matching adapter sends an ARP response with its MAC address to the query sender

ARP table (stored in host/router memory)

IP Address	MAC Address	TTL
222.222.222.221	88-B2-2F-54-1A-0F	13:45:00
222.222.222.223	5C-66-AB-90-75-B1	13:52:00

Functions like a cache: an entry is added when discovered

Sending Across Subnets

- What if a host wants to send a packet to a host on *another* subnet?
- Subnets are interconnected by a router
- *Each* of the router interface has:
  - An IP address
  - An adapter with a MAC address
  - An ARP module

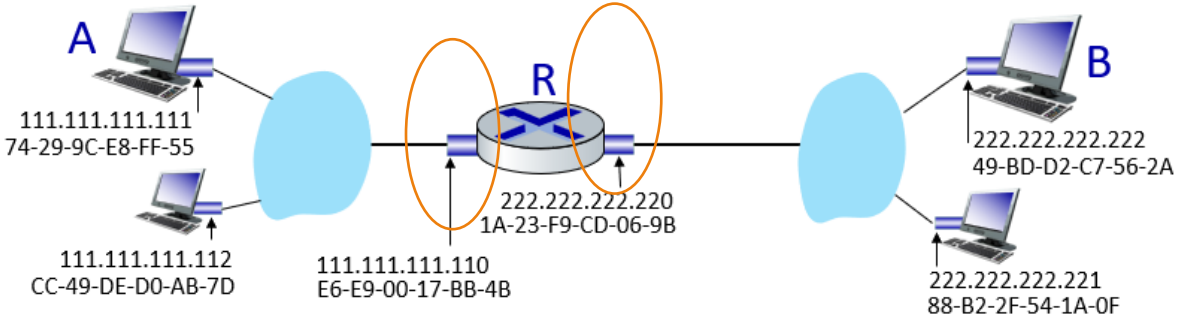

Sending Across Subnets

A to B: What destination MAC address to use?

- Link-layer ARP
- Network-layer forwarding

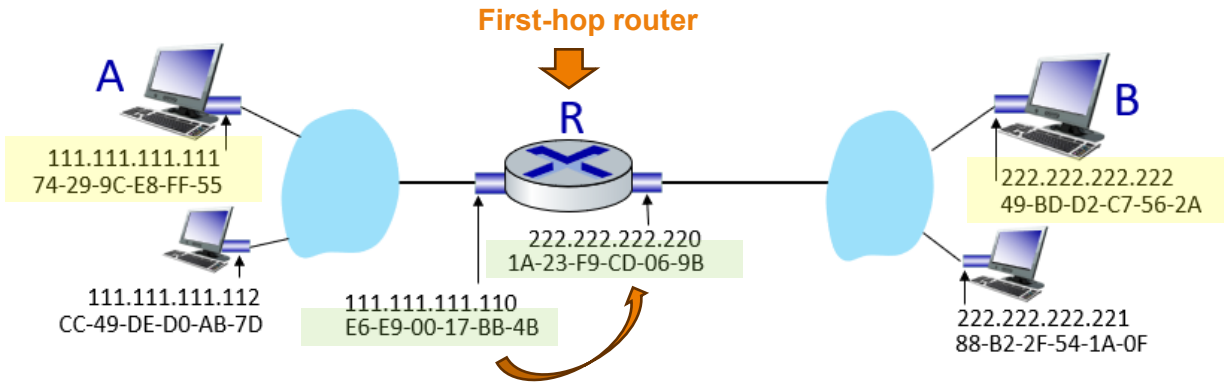

A

Network	IP src: 111.111.111.111 IP dest: 222.222.222.222
Link	MAC src: 74-29-9C-E8-FF-55 MAC dest: **E6-E9-00-17-BB-4B**

R

Network	IP src: 111.111.111.111 IP dest: 222.222.222.222
Link	MAC src: **1A-23-F9-CD-06-9B** MAC dest: **49-BD-D2-C7-56-2A**