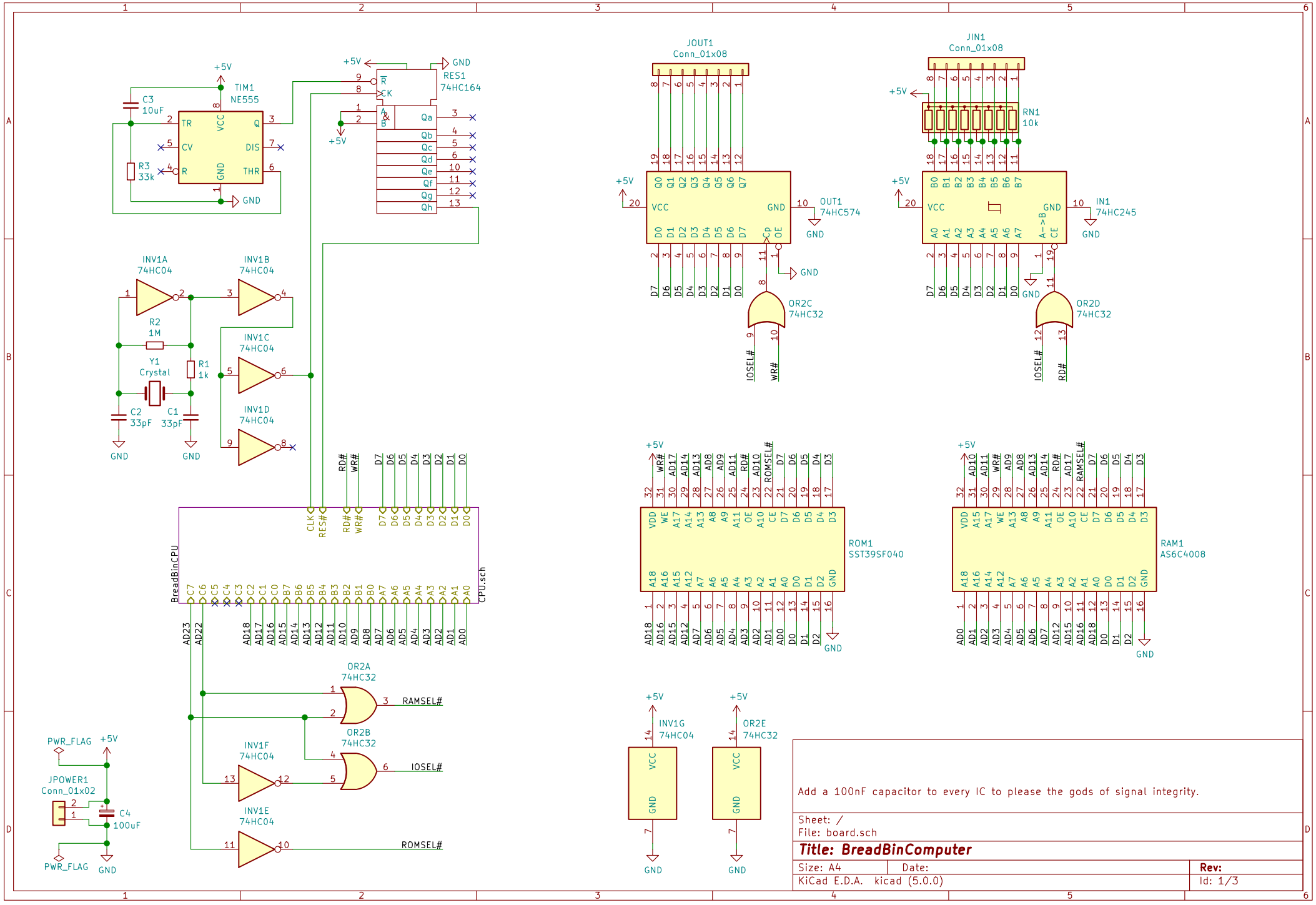

Add a 100nF capacitor to every IC to please the gods of signal integrity.

Sheet: /
File: board.sch

Title: BreadBinComputer

Size: A4	Date:	Rev:
KiCad E.D.A. kicad (5.0.0)		Id: 1/3

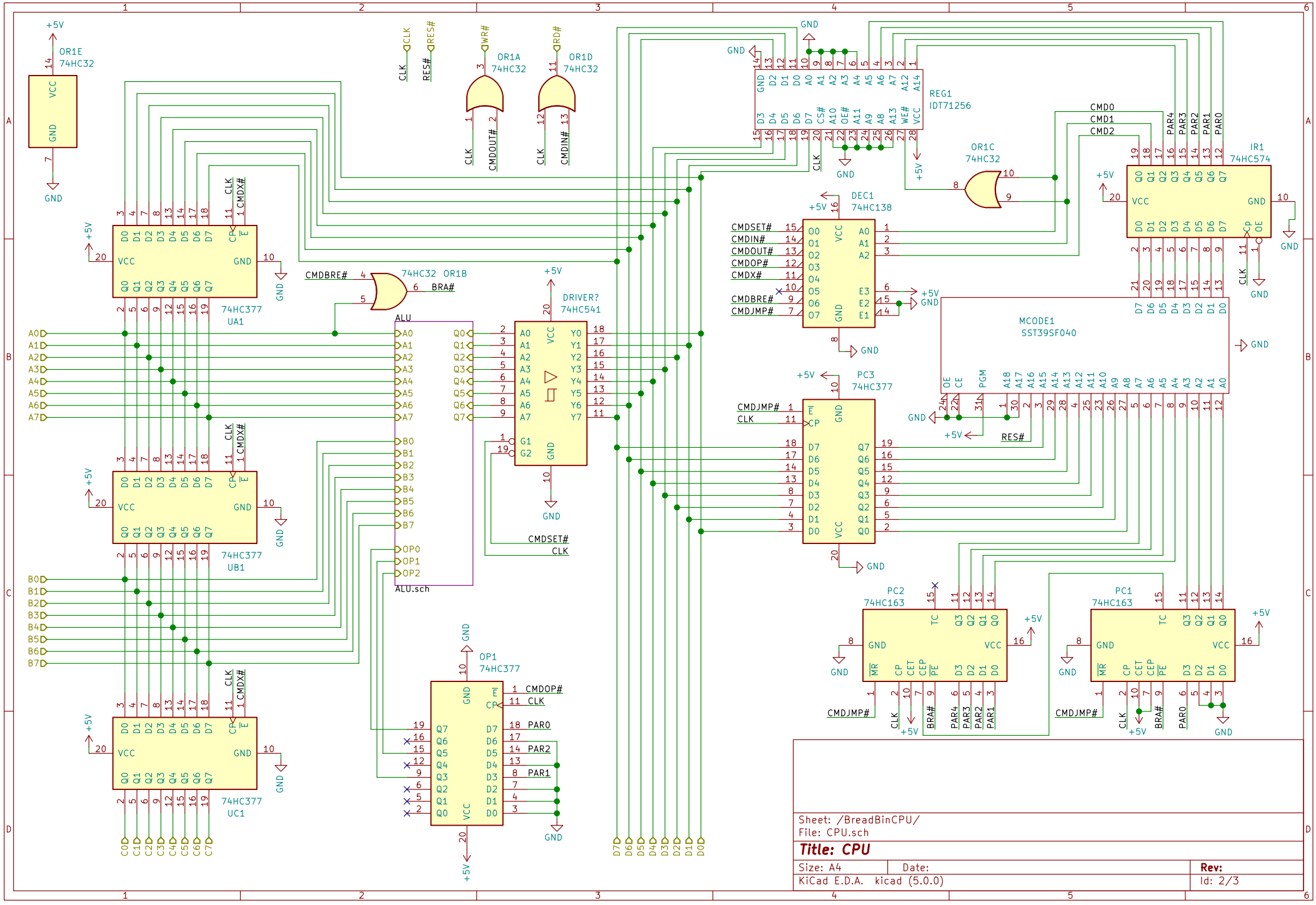
OR1E
74HC32
OR1A
74HC32
OR1D
74HC32
OR1C
74HC32
OR1B
74HC32
REG1
IDT71256
IR1
74HC574
DEC1
74HC138
DRIVER?
74HC541
MCODE1
SST39SF040
PC3
74HC377
PC2
74HC163
PC1
74HC163
OP1
74HC377
UA1
74HC377
UB1
74HC377
UC1
74HC377
ALU
ALU.sch
CMDBRE#
BRA#
CMDSET#
CMDIN#
CMDOUT#
CMDOP#
CMDX#
CMDJMP#
CMD0
CMD1
CMD2
PAR0
PAR1
PAR2
PAR3
PAR4
RES#
CLK
WR#
RD#
+5V
GND
Sheet: /BreadBinCPU/
File: CPU.sch
Title: CPU
Size: A4
Date:
Rev:
KiCad E.D.A. kicad (5.0.0)
Id: 2/3

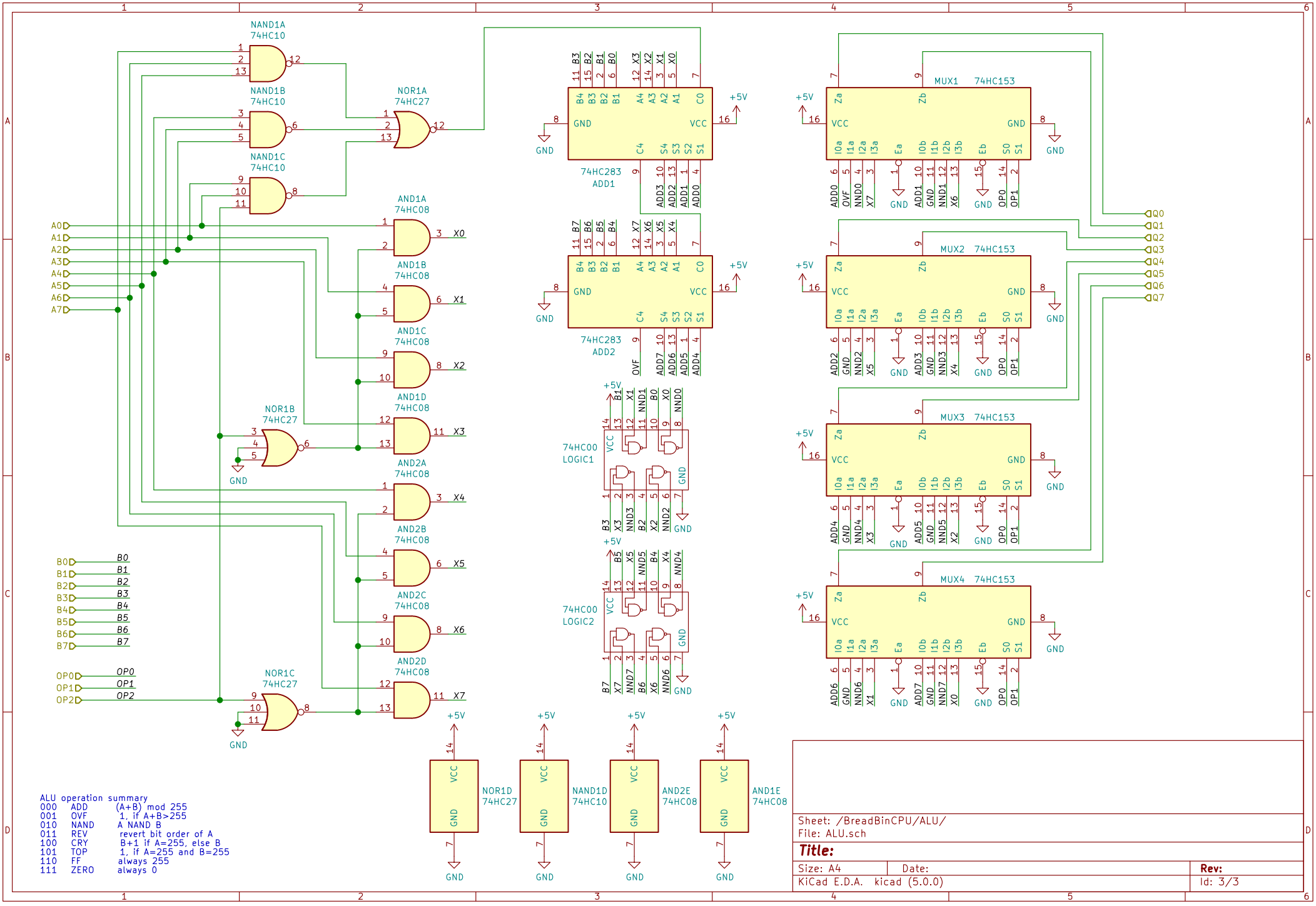
NAND1A 74HC10
NAND1B 74HC10
NAND1C 74HC10
NOR1A 74HC27
NOR1B 74HC27
NOR1C 74HC27
AND1A 74HC08
AND1B 74HC08
AND1C 74HC08
AND1D 74HC08
AND2A 74HC08
AND2B 74HC08
AND2C 74HC08
AND2D 74HC08
74HC283 ADD1
74HC283 ADD2
74HC00 LOGIC1
74HC00 LOGIC2
MUX1 74HC153
MUX2 74HC153
MUX3 74HC153
MUX4 74HC153
NOR1D 74HC27
NAND1D 74HC10
AND2E 74HC08
AND1E 74HC08
+5V
GND
A0 A1 A2 A3 A4 A5 A6 A7
B0 B1 B2 B3 B4 B5 B6 B7
OP0 OP1 OP2
X0 X1 X2 X3 X4 X5 X6 X7
Q0 Q1 Q2 Q3 Q4 Q5 Q6 Q7
ALU operation summary
000 ADD (A+B) mod 255
001 OVF 1, if A+B>255
010 NAND A NAND B
011 REV revert bit order of A
100 CRY B+1 if A=255, else B
101 TOP 1, if A=255 and B=255
110 FF always 255
111 ZERO always 0
Sheet: /BreadBinCPU/ALU/
File: ALU.sch
Title:
Size: A4
Date:
Rev:
KiCad E.D.A. kicad (5.0.0)
Id: 3/3