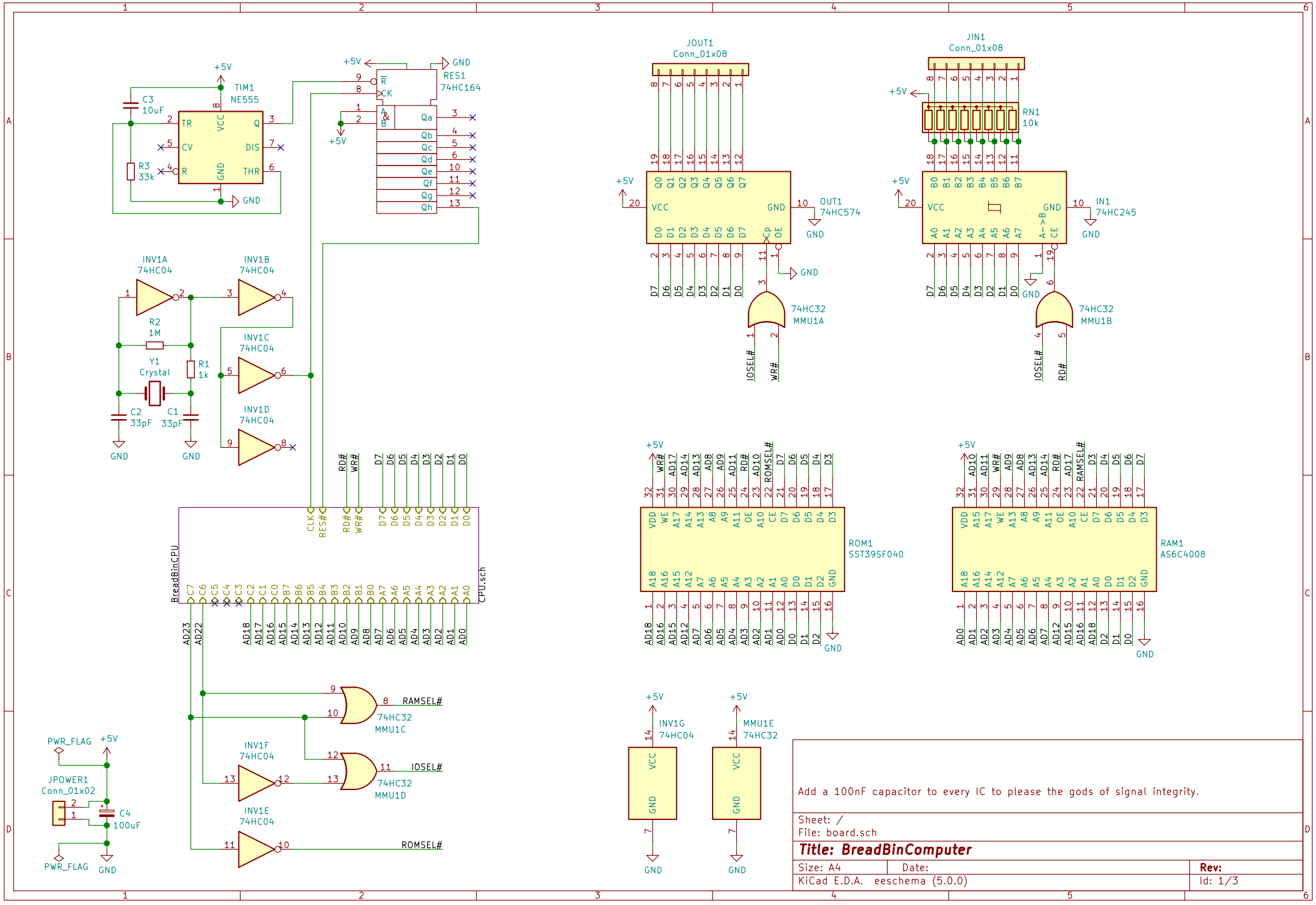

Add a 100nF capacitor to every IC to please the gods of signal integrity.

Sheet: /
File: board.sch

Title: BreadBinComputer

Size: A4	Date:	Rev:
KiCad E.D.A. eeschema (5.0.0)		Id: 1/3

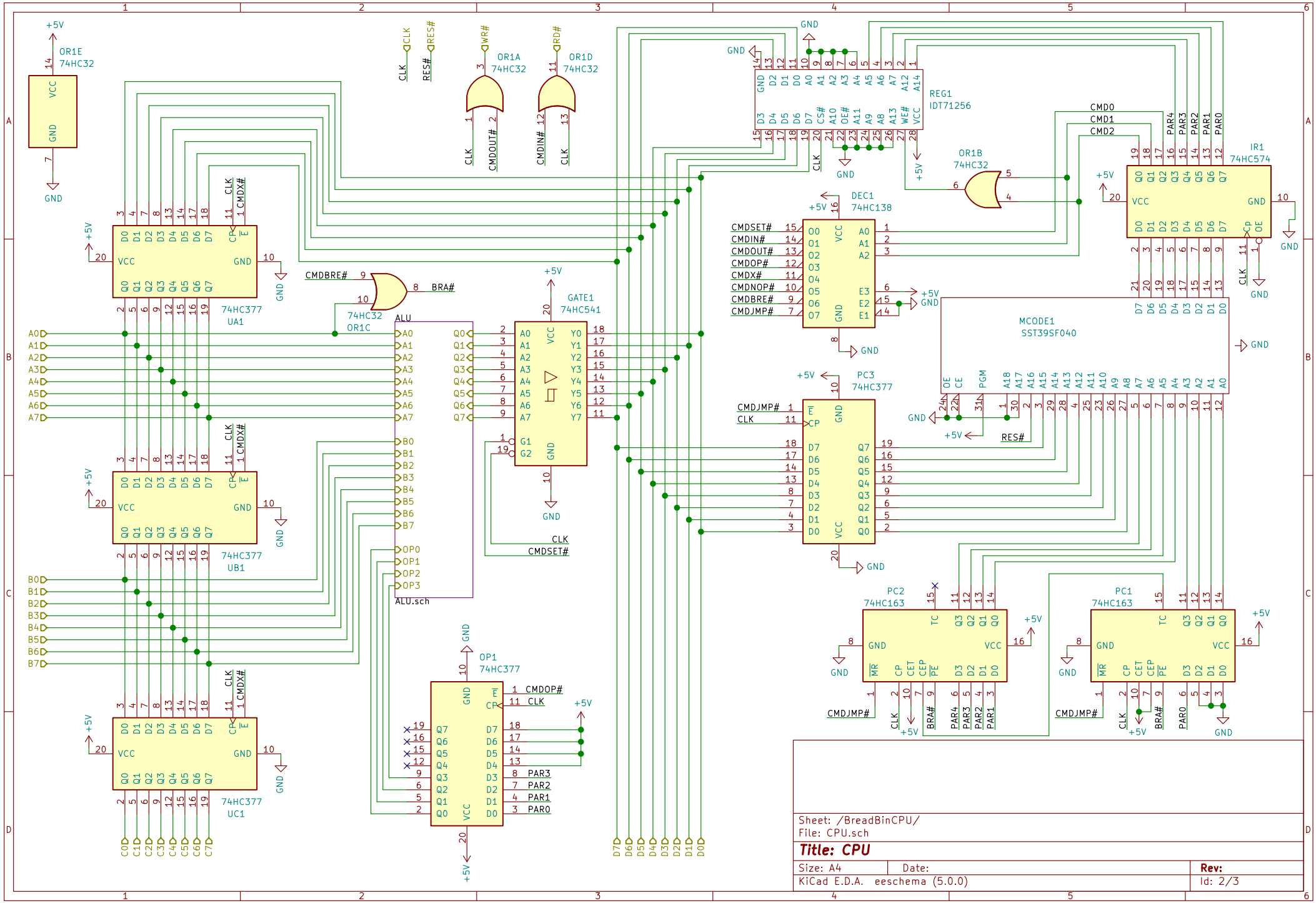
OR1E
74HC32
OR1A
74HC32
OR1D
74HC32
REG1
IDT71256
OR1B
74HC32
IR1
74HC574
DEC1
74HC138
MCODE1
SST39SF040
74HC377
UA1
74HC377
UB1
74HC377
UC1
OR1C
74HC32
GATE1
74HC541
ALU
ALU.sch
OP1
74HC377
PC3
74HC377
PC2
74HC163
PC1
74HC163
CMDBRE#
BRA#
CMDSET#
CMDIN#
CMDOUT#
CMDOP#
CMDX#
CMDNOP#
CMDJMP#
CMD0
CMD1
CMD2
PAR0
PAR1
PAR2
PAR3
PAR4
RES#
CLK
Sheet: /BreadBinCPU/
File: CPU.sch
Title: CPU
Size: A4
Date:
Rev:
KiCad E.D.A. eeschema (5.0.0)
Id: 2/3

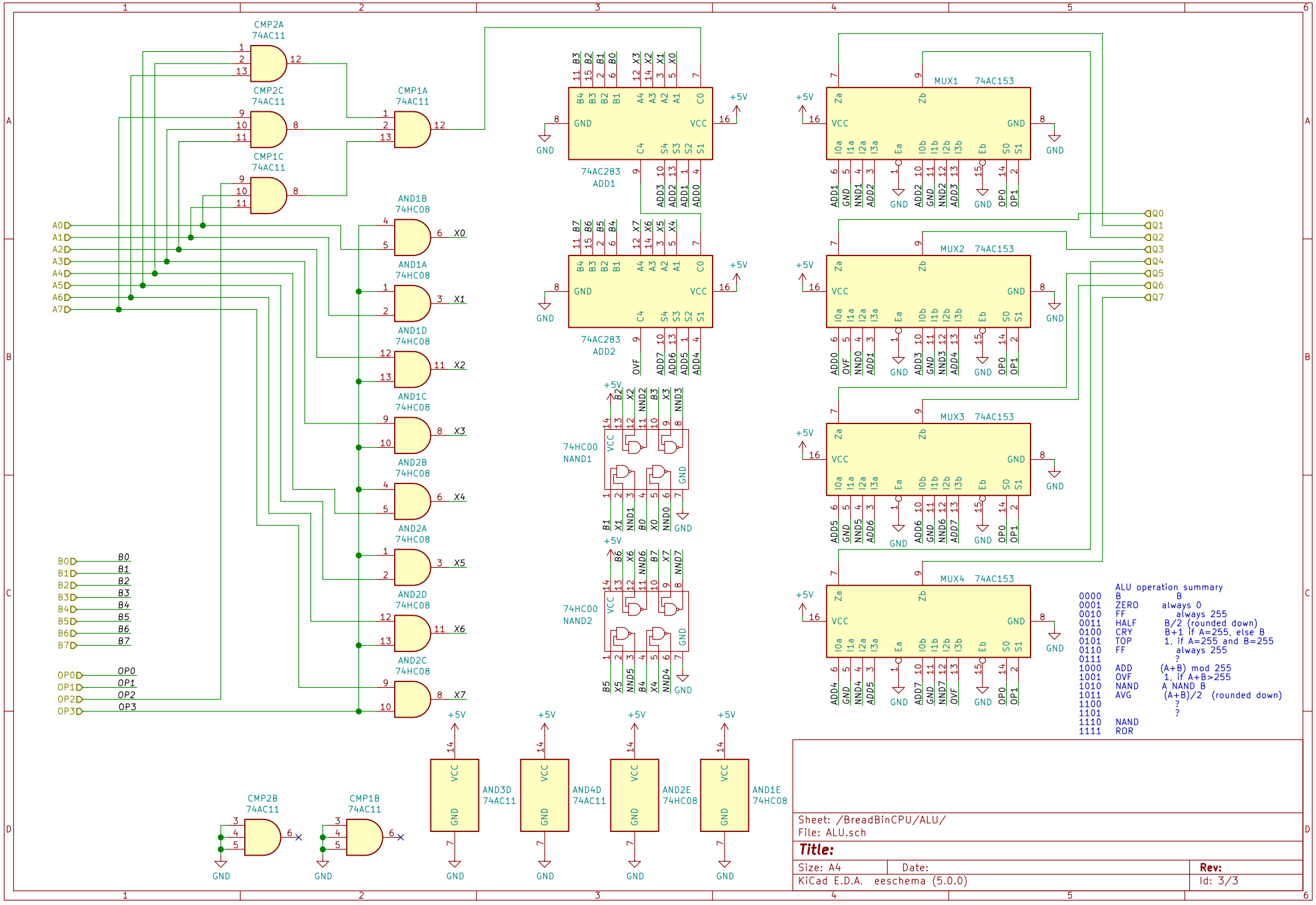

Sheet: /BreadBinCPU/ALU/
File: ALU.sch

Title:

Size: A4	Date:	Rev:
KiCad E.D.A. eeschema (5.0.0)		Id: 3/3