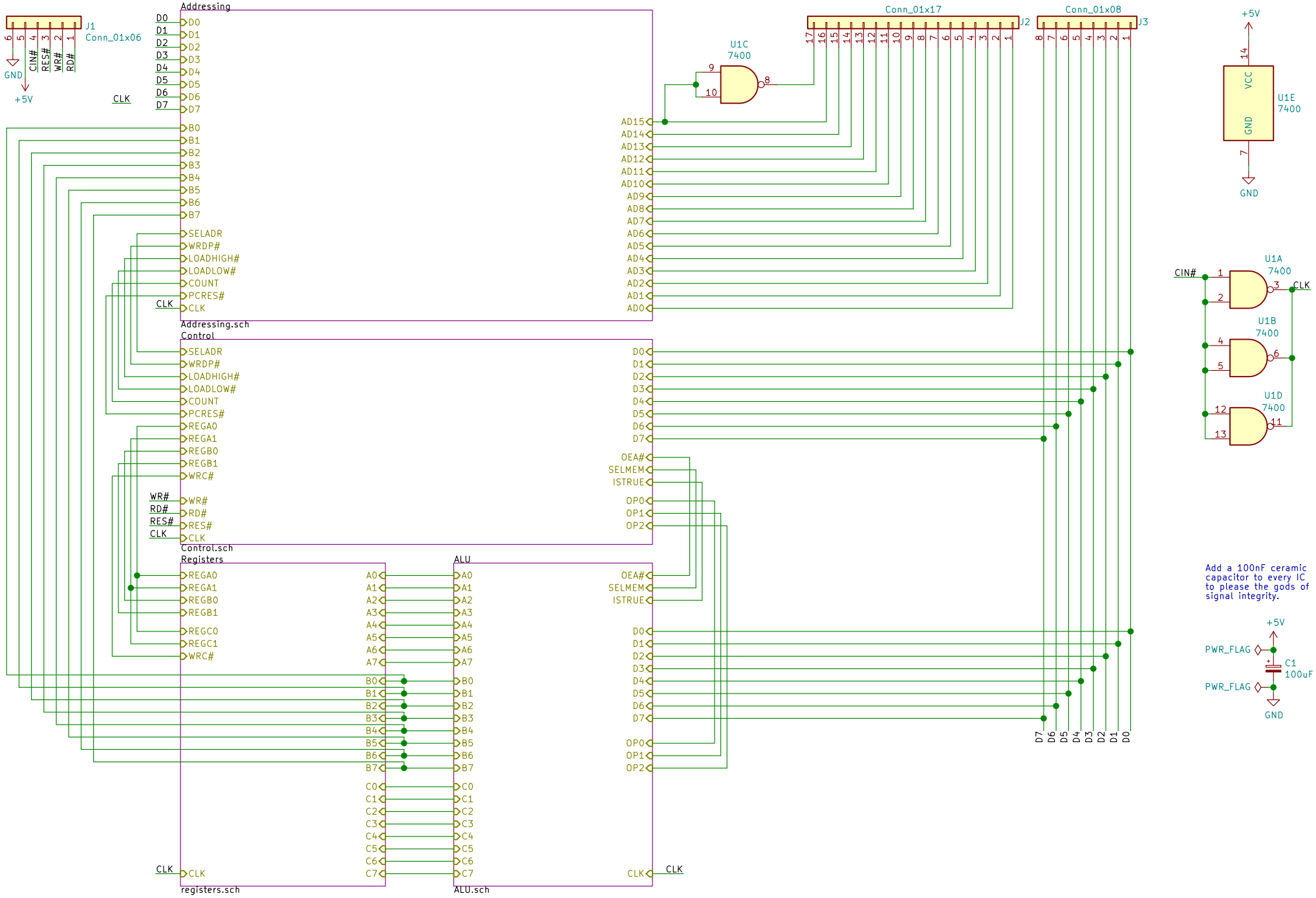
J1
Conn_01x06
GND
+5V
CIN#
RES#
WR#
RD#
Addressing
Addressing.sch
Control
Control.sch
Registers
registers.sch
ALU
ALU.sch
CLK
U1C
7400
Conn_01x17
J2
Conn_01x08
J3
U1E
7400
VCC
U1A
U1B
U1D
Add a 100nF ceramic capacitor to every IC to please the gods of signal integrity.
PWR_FLAG
C1
100uF

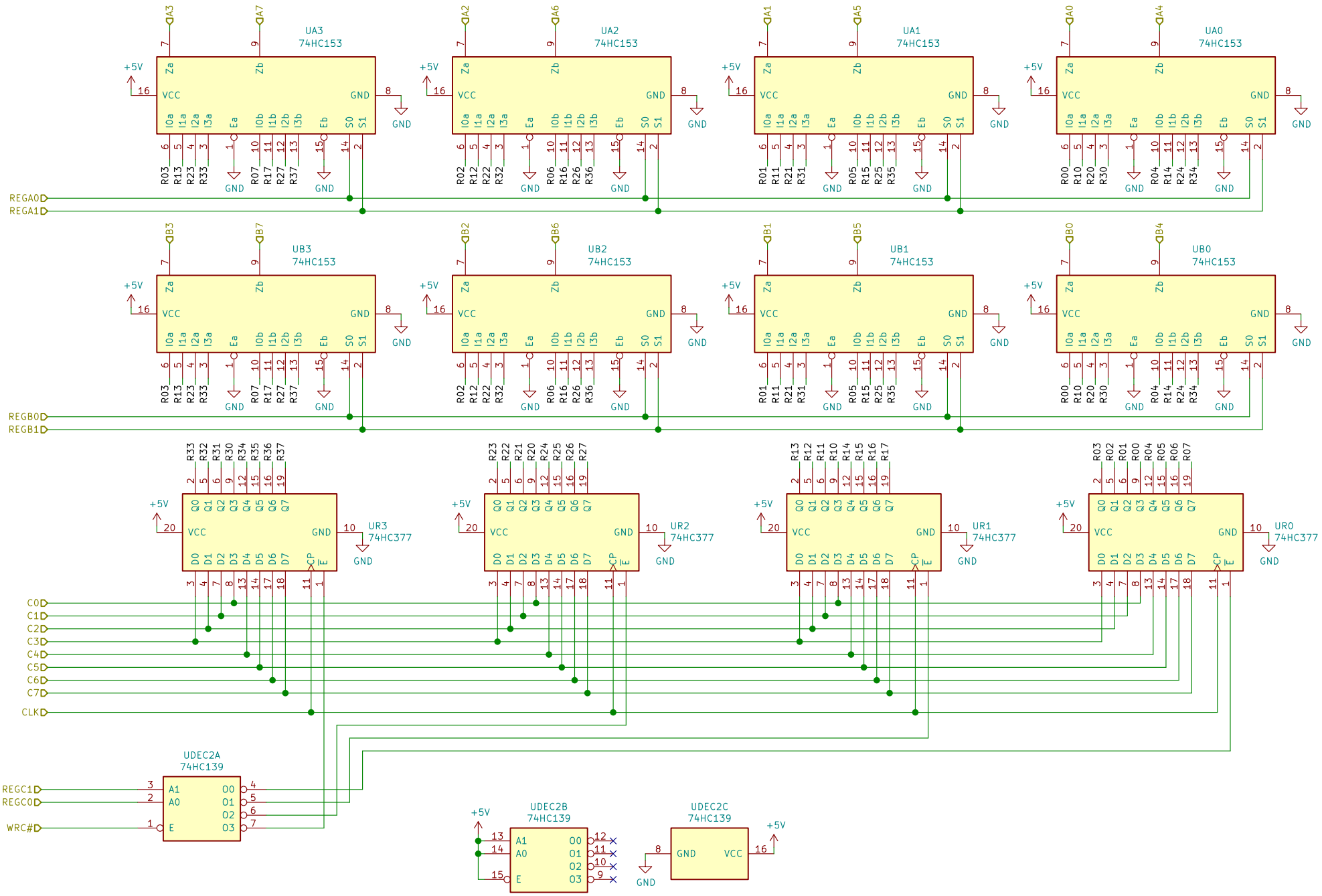
UA3
74HC153
UA2
74HC153
UA1
74HC153
UA0
74HC153
UB3
74HC153
UB2
74HC153
UB1
74HC153
UB0
74HC153
UR3
74HC377
UR2
74HC377
UR1
74HC377
UR0
74HC377
UDEC2A
74HC139
UDEC2B
74HC139
UDEC2C
74HC139
+5V
GND
VCC
REGA0
REGA1
REGB0
REGB1
C0
C1
C2
C3
C4
C5
C6
C7
CLK
REGC1
REGC0
WRC#

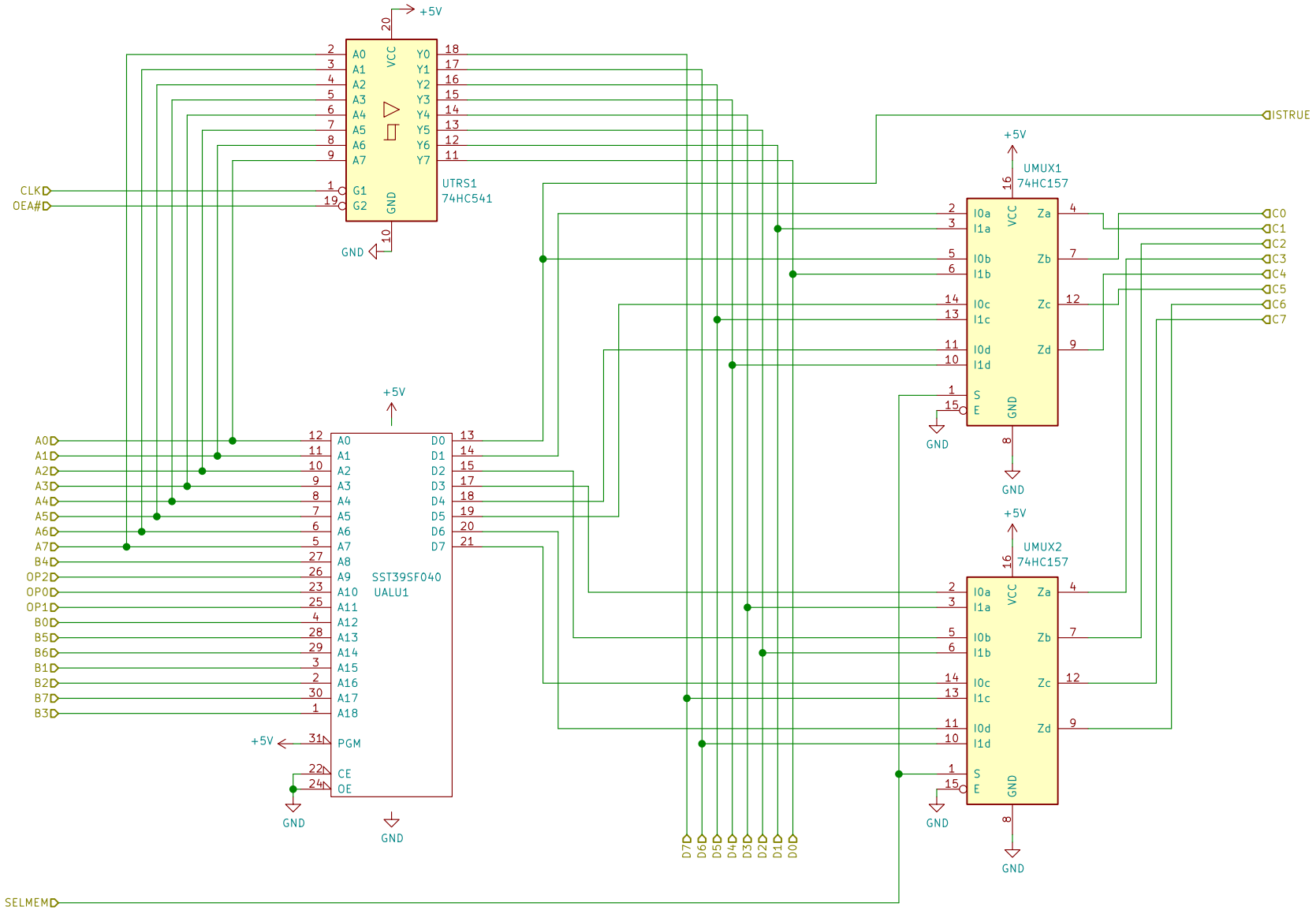
+5V
20
A0
A1
A2
A3
A4
A5
A6
A7
VCC
Y0
Y1
Y2
Y3
Y4
Y5
Y6
Y7
G1
G2
GND
UTRS1
74HC541
CLK
OEA#
GND
10
ISTRUE
UMUX1
74HC157
16
I0a
I1a
I0b
I1b
I0c
I1c
I0d
I1d
S
E
Za
Zb
Zc
Zd
C0
C1
C2
C3
C4
C5
C6
C7
UMUX2
74HC157
SST39SF040
UALU1
D0
D1
D2
D3
D4
D5
D6
D7
PGM
CE
OE
B4
OP2
OP0
OP1
B0
B5
B6
B1
B2
B7
B3
SELMEM

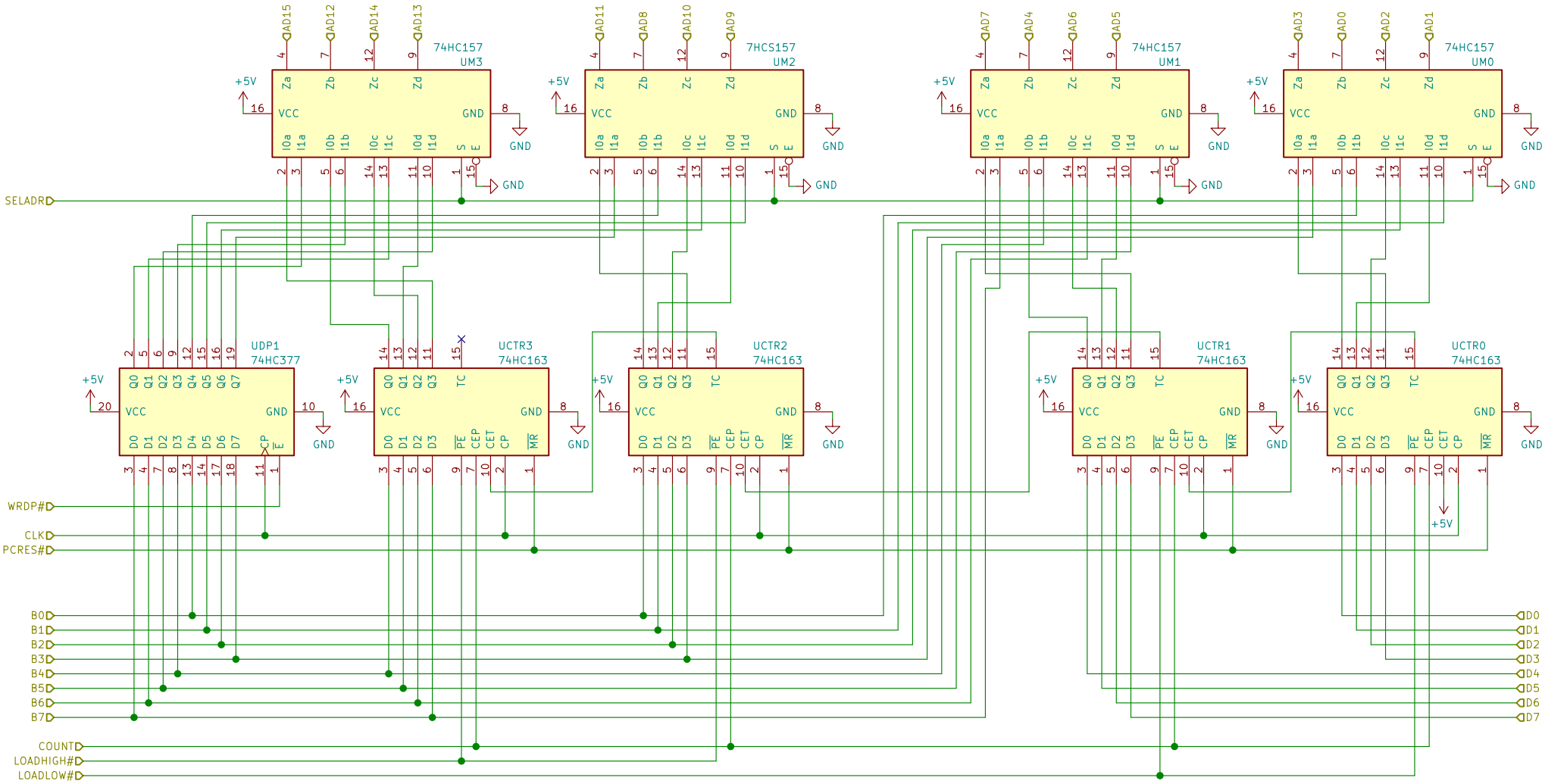
74HC157
UM3
7HCS157
UM2
74HC157
UM1
74HC157
UM0
UDP1
74HC377
UCTR3
74HC163
UCTR2
74HC163
UCTR1
74HC163
UCTR0
74HC163
AD15
AD12
AD14
AD13
AD11
AD8
AD10
AD9
AD7
AD4
AD6
AD5
AD3
AD0
AD2
AD1
+5V
GND
SELADR
WRDP#
CLK
PCRES#
B0
B1
B2
B3
B4
B5
B6
B7
COUNT
LOADHIGH#
LOADLOW#
D0
D1
D2
D3
D4
D5
D6
D7

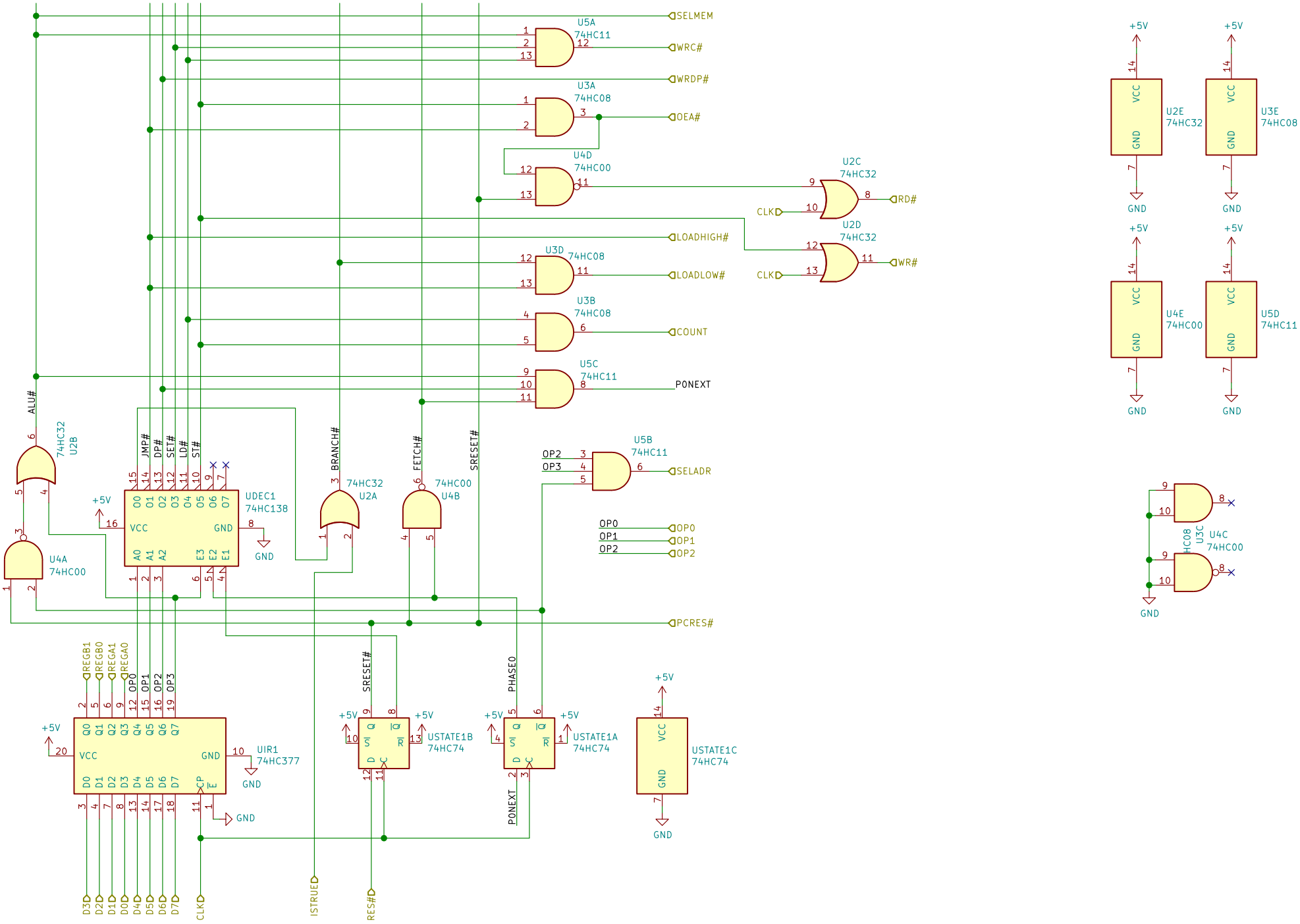
SELMEM
WRC#
WRDP#
OEA#
RD#
WR#
LOADHIGH#
LOADLOW#
COUNT
PONEXT
SELADR
OP0
OP1
OP2
PCRES#
U5A
74HC11
U3A
74HC08
U4D
74HC00
U2C
74HC32
U2D
74HC32
CLK
U3D
74HC08
U3B
74HC08
U5C
74HC11
U5B
74HC11
ALU#
74HC32
U2B
U4A
74HC00
JMP#
DP#
SET#
LD#
ST#
UDEC1
74HC138
BRANCH#
74HC32
U2A
FETCH#
74HC00
U4B
SRESET#
PHASE0
UIR1
74HC377
USTATE1B
74HC74
USTATE1A
74HC74
USTATE1C
74HC74
REGB1
REGB0
REGA1
REGA0
D3D
D2D
D1D
D0D
D4D
D5D
D6D
D7D
ISTRUED
RES#D
+5V
GND
U2E
74HC32
U3E
74HC08
U4E
74HC00
U5D
74HC11
U4C
74HC00
U3C
HC08