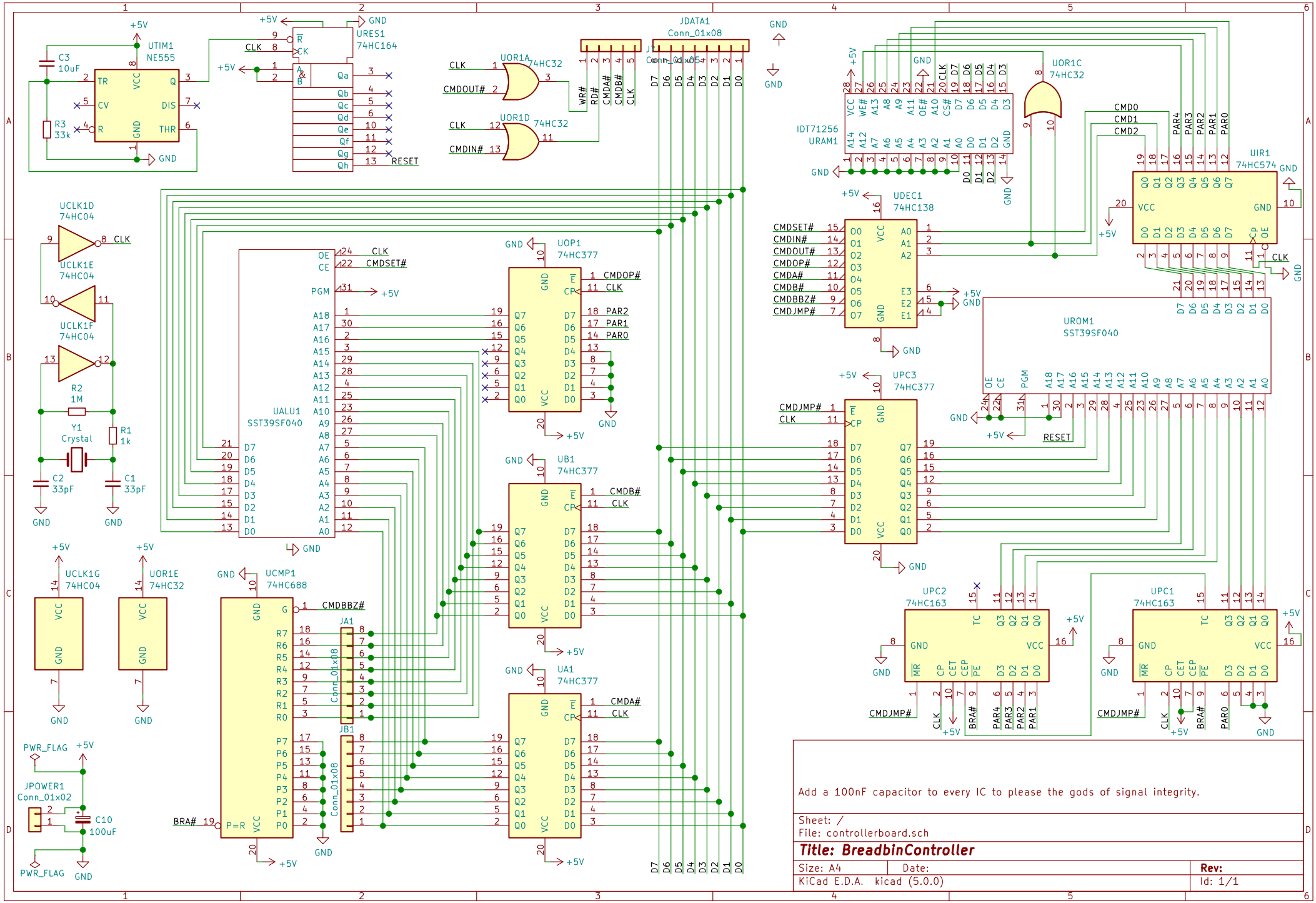
UTIM1
NE555
C3
10uF
R3
33k
URES1
74HC164
UOR1A
74HC32
UOR1D
74HC32
JDATA1
Conn_01x08
J2
Conn_01x05
IDT71256
URAM1
UOR1C
74HC32
UIR1
74HC574
UDEC1
74HC138
UROM1
SST39SF040
UCLK1D
74HC04
UCLK1E
74HC04
UCLK1F
74HC04
R2
1M
Y1
Crystal
R1
1k
C2
33pF
C1
33pF
UALU1
SST39SF040
UOP1
74HC377
UB1
74HC377
UA1
74HC377
UPC3
74HC377
UCLK1G
74HC04
UOR1E
74HC32
UCMP1
74HC688
JA1
JB1
Conn_01x08
UPC2
74HC163
UPC1
74HC163
PWR_FLAG
JPOWER1
Conn_01x02
C10
100uF
Add a 100nF capacitor to every IC to please the gods of signal integrity.
Sheet: /
File: controllerboard.sch
Title: BreadbinController
Size: A4
Date:
Rev:
KiCad E.D.A. kicad (5.0.0)
Id: 1/1