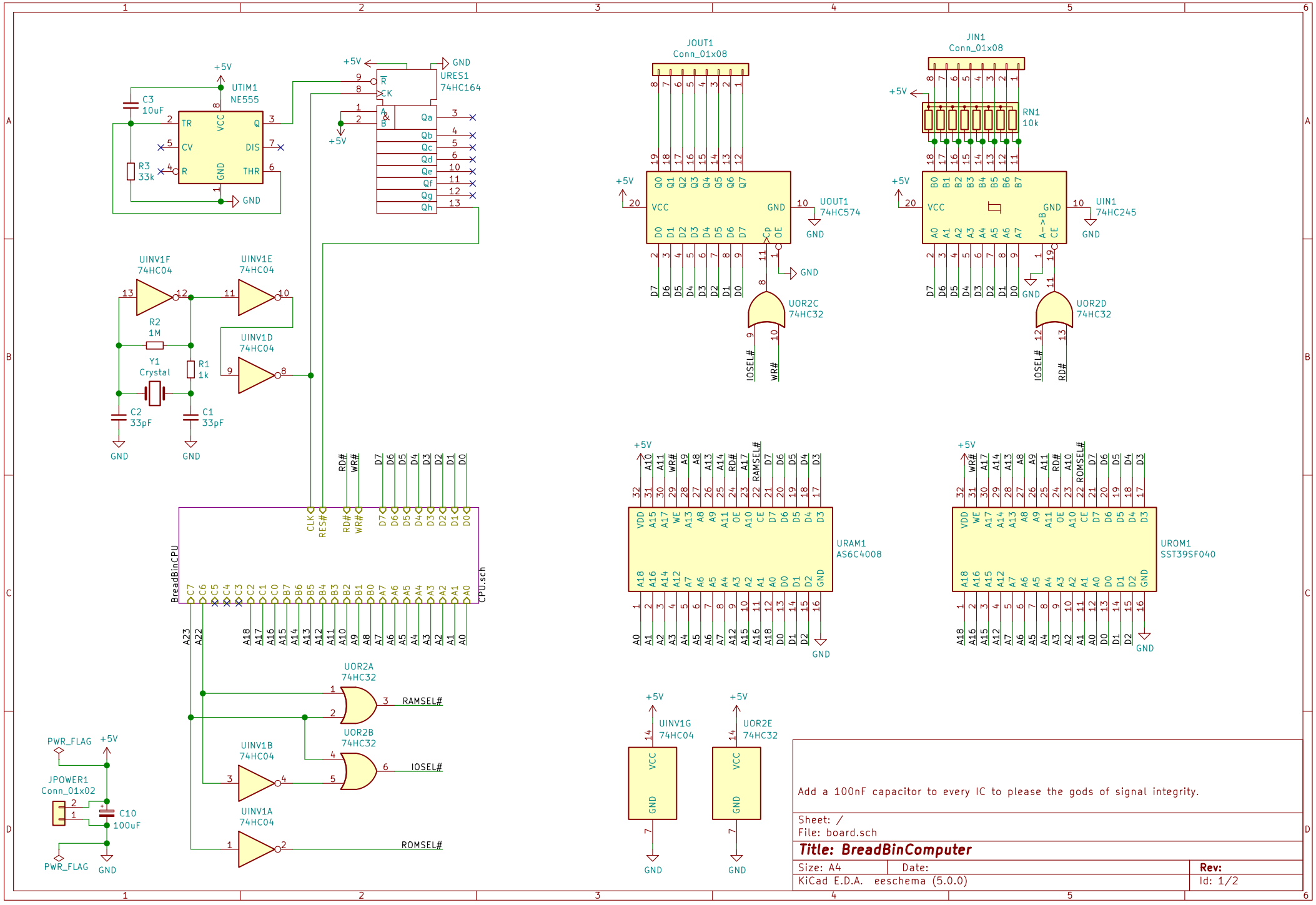

Add a 100nF capacitor to every IC to please the gods of signal integrity.

Sheet: /
File: board.sch

Title: BreadBinComputer

Size: A4	Date:	Rev:
KiCad E.D.A. eeschema (5.0.0)		Id: 1/2

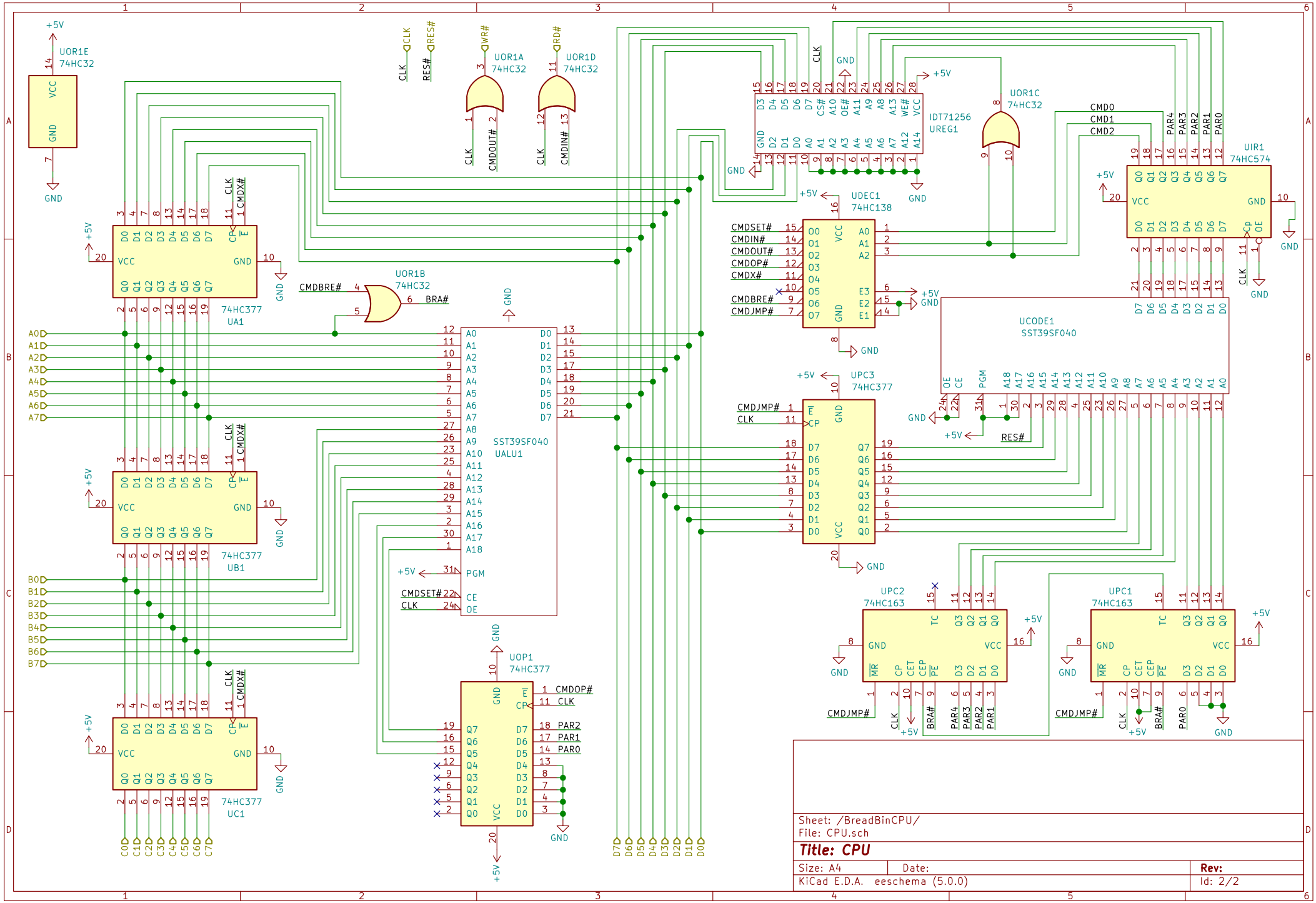
UOR1E
74HC32
UOR1A
74HC32
UOR1D
74HC32
UOR1C
74HC32
UOR1B
74HC32
IDT71256
UREG1
UDEC1
74HC138
UIR1
74HC574
UCODE1
SST39SF040
UPC3
74HC377
UPC2
74HC163
UPC1
74HC163
UA1
74HC377
UB1
74HC377
UC1
74HC377
UALU1
SST39SF040
UOP1
74HC377
CMDSET#
CMDIN#
CMDOUT#
CMDOP#
CMDX#
CMDBRE#
CMDJMP#
CMD0
CMD1
CMD2
PAR4
PAR3
PAR2
PAR1
PAR0
BRA#
RES#
CLK
+5V
GND
Sheet: /BreadBinCPU/
File: CPU.sch
Title: CPU
Size: A4
Date:
Rev:
KiCad E.D.A. eeschema (5.0.0)
Id: 2/2