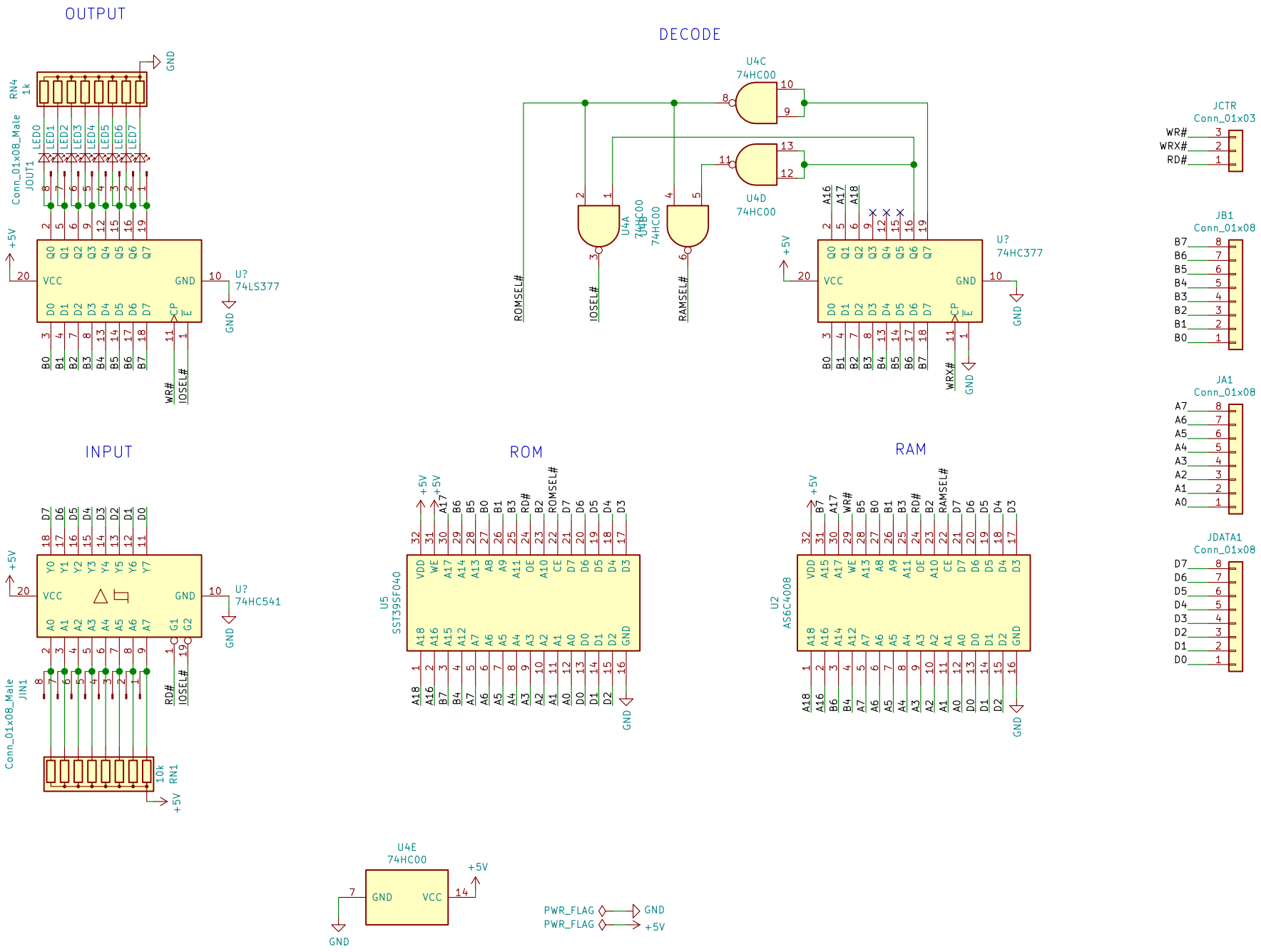
OUTPUT
DECODE
INPUT
ROM
RAM
U4C
74HC00
U4D
74HC00
U4A
74HC00
U4B
74HC00
U4E
74HC00
U?
74LS377
U?
74HC377
U?
74HC541
U5
SST39SF040
U2
AS6C4008
RN4
1k
RN1
10k
JOUT1
Conn_01x08_Male
JIN1
Conn_01x08_Male
JCTR
Conn_01x03
JB1
Conn_01x08
JA1
Conn_01x08
JDATA1
Conn_01x08
ROMSEL#
IOSEL#
RAMSEL#
WR#
WRX#
RD#
PWR_FLAG
PWR_FLAG
GND
+5V