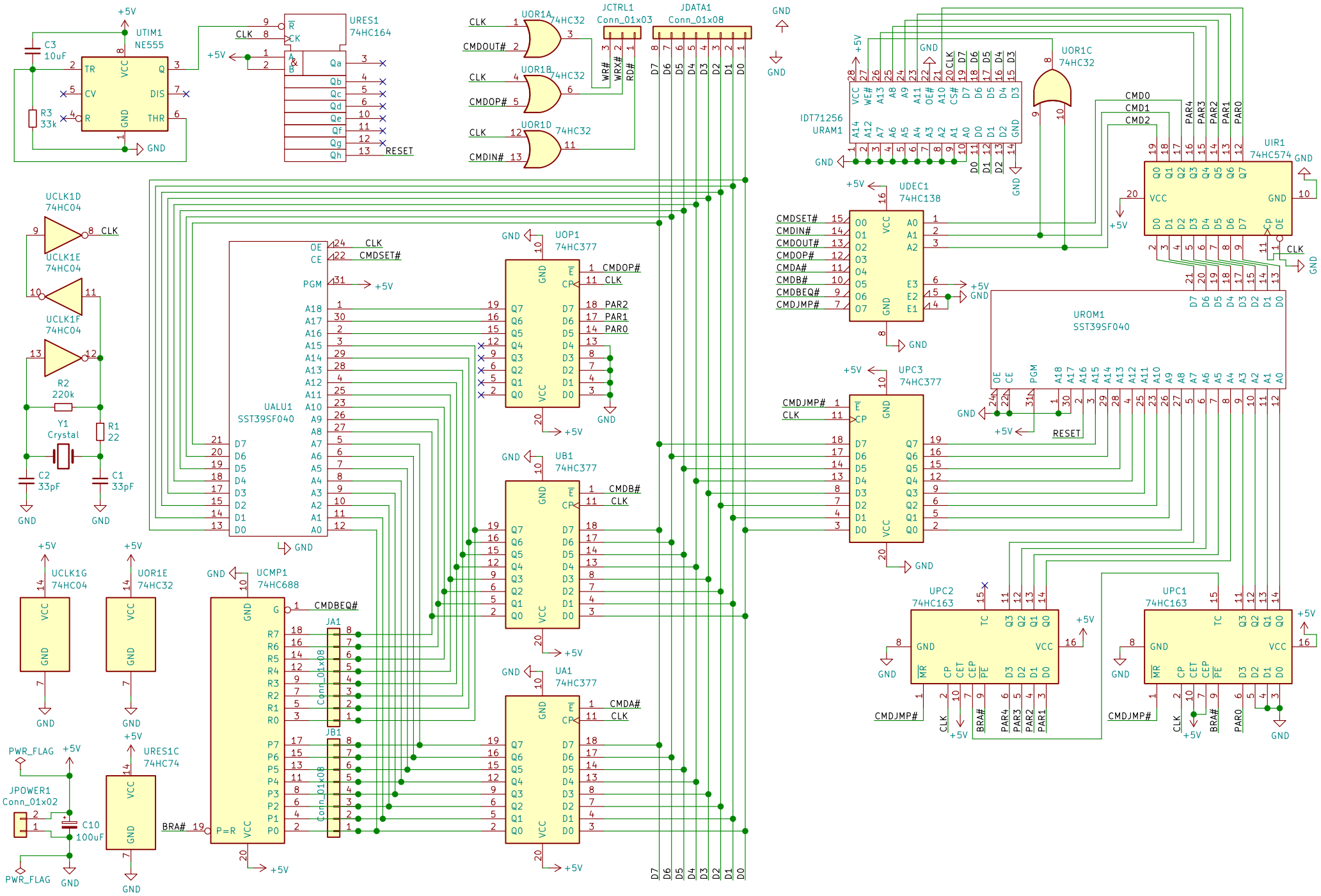
UTIM1
NE555
C3
10uF
R3
33k
URES1
74HC164
UOR1A
74HC32
UOR1B
74HC32
UOR1D
74HC32
JCTRL1
Conn_01x03
JDATA1
Conn_01x08
UOR1C
74HC32
IDT71256
URAM1
UIR1
74HC574
UDEC1
74HC138
UROM1
SST39SF040
UALU1
SST39SF040
UOP1
74HC377
UB1
74HC377
UA1
74HC377
UPC3
74HC377
UPC2
74HC163
UPC1
74HC163
UCLK1D
74HC04
UCLK1E
74HC04
UCLK1F
74HC04
R2
220k
Y1
Crystal
R1
22
C2
33pF
C1
33pF
UCLK1G
74HC04
UOR1E
74HC32
UCMP1
74HC688
JA1
JB1
Conn_01x08
URES1C
74HC74
JPOWER1
Conn_01x02
C10
100uF
PWR_FLAG
CLK
CMDOUT#
CMDOP#
CMDIN#
CMDSET#
CMDIN#
CMDOUT#
CMDOP#
CMDA#
CMDB#
CMDBEQ#
CMDJMP#
CMD0
CMD1
CMD2
PAR4
PAR3
PAR2
PAR1
PAR0
RESET
BRA#
WR#
WRX#
RD#
GND
+5V