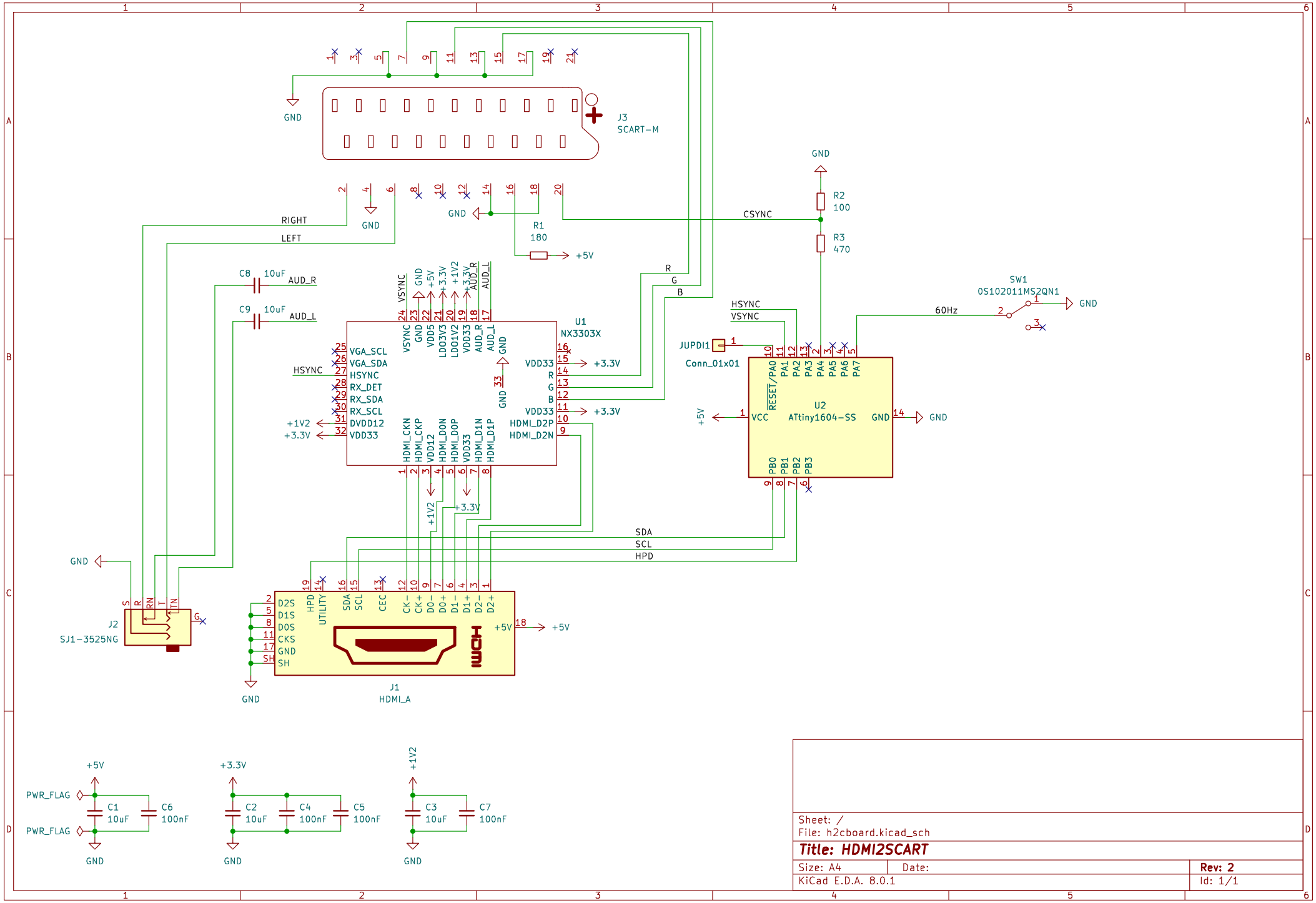


Sheet: /
File: h2cboard.kicad_sch

**Title: HDMI2SCART**

| | | |
|---|---|---|
| Size: A4 | Date: | **Rev: 2** |
| KiCad E.D.A. 8.0.1 | | Id: 1/1 |