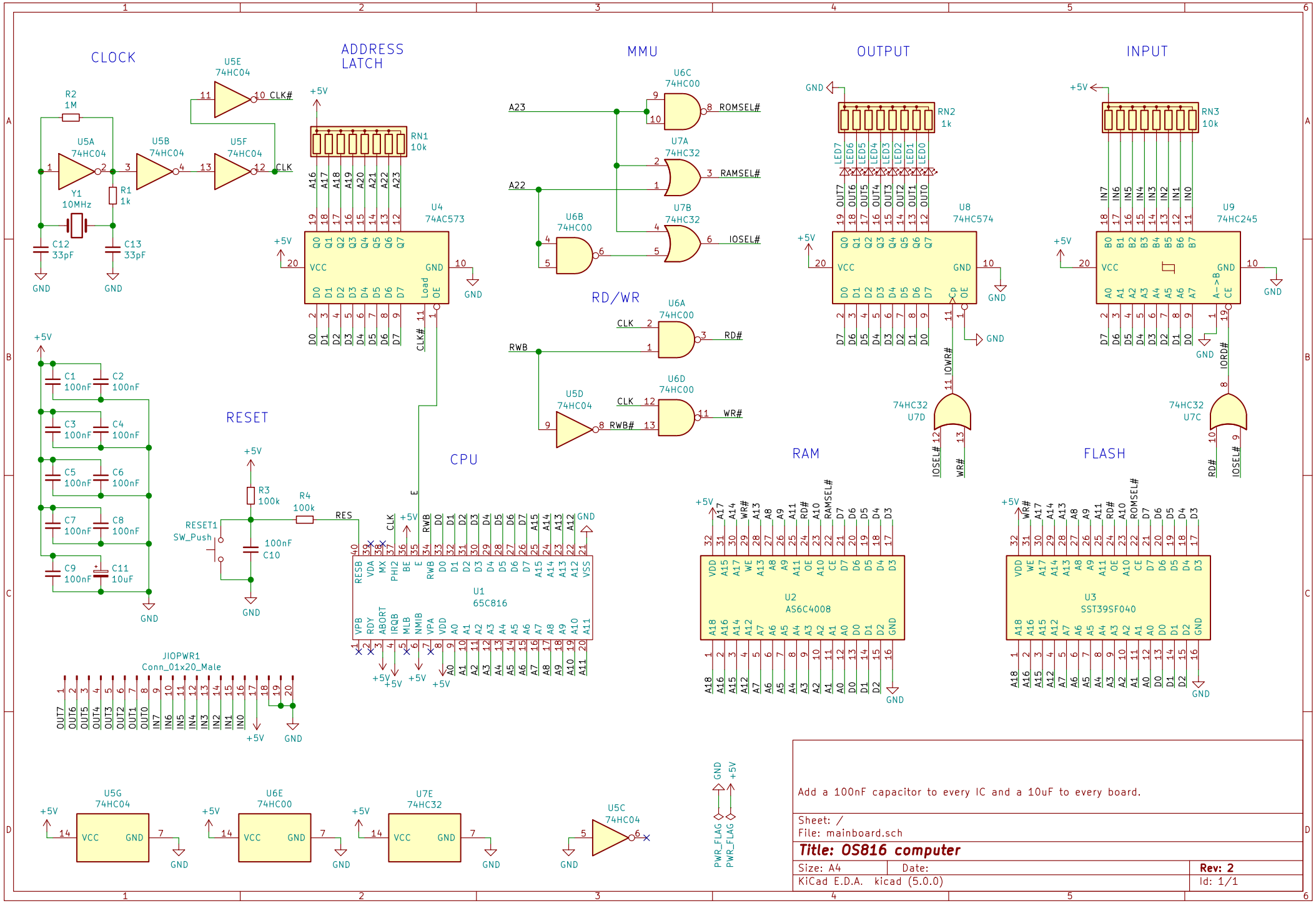

Add a 100nF capacitor to every IC and a 10uF to every board.

Sheet: /
File: mainboard.sch

Title: OS816 computer

Size: A4	Date:	Rev: 2
KiCad E.D.A. kicad (5.0.0)		Id: 1/1