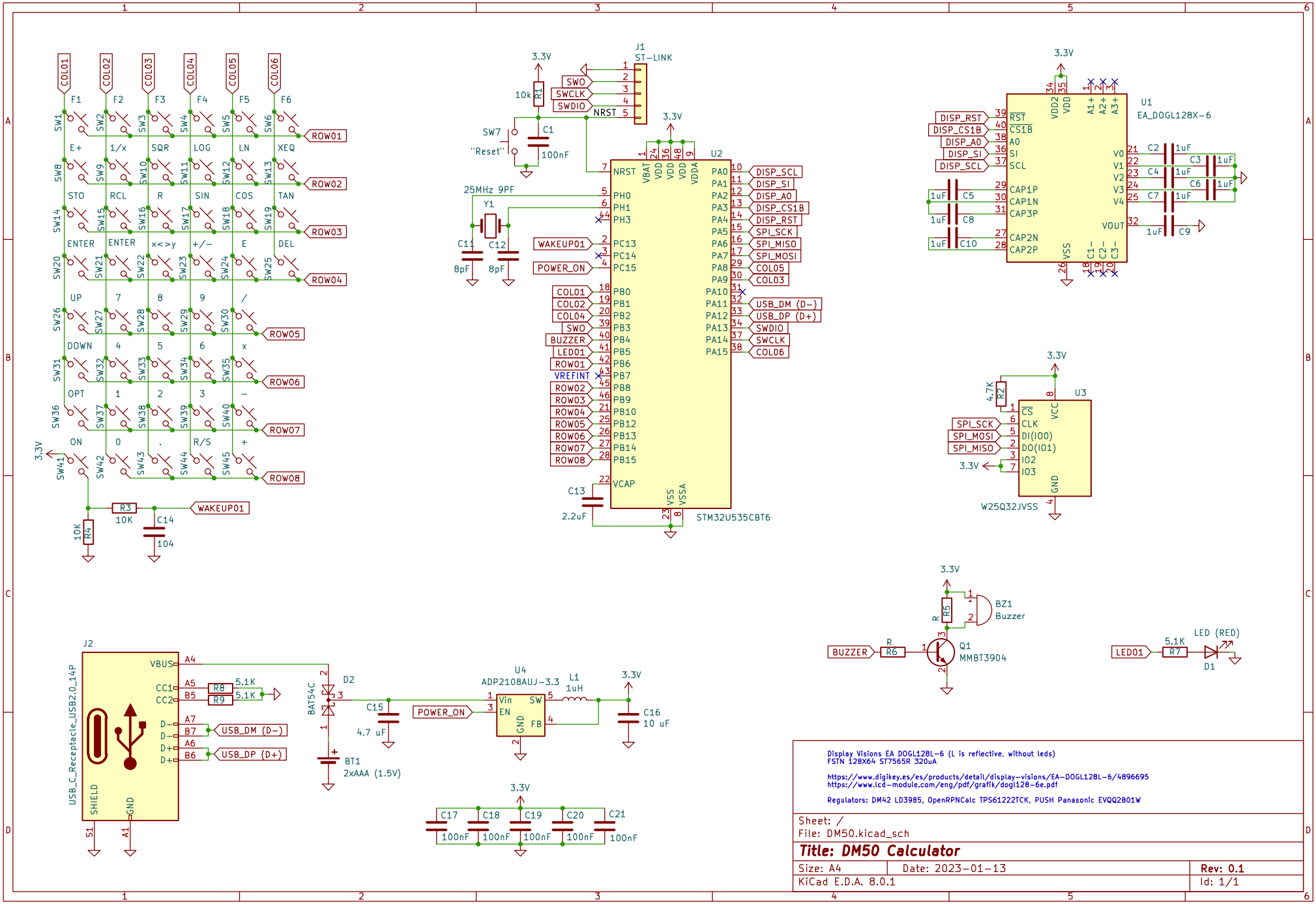
COL01
COL02
COL03
COL04
COL05
COL06
F1 F2 F3 F4 F5 F6
E+ 1/x SQR LOG LN XEQ
STO RCL R SIN COS TAN
ENTER ENTER x<>y +/- E DEL
UP 7 8 9 /
DOWN 4 5 6 x
OPT 1 2 3 -
ON 0 . R/S +
ROW01
ROW02
ROW03
ROW04
ROW05
ROW06
ROW07
ROW08
3.3V
R3 10K
R4 10K
C14 104
WAKEUP01
J1 ST-LINK
SWO
SWCLK
SWDIO
NRST
R1 10k
SW7 "Reset"
C1 100nF
25MHz 9PF
Y1
C11 8pF
C12 8pF
U2
STM32U535CBT6
VBAT VDD VDD VDD VDDA
NRST
PH0 PH1 PH3
PC13 PC14 PC15
PB0 PB1 PB2 PB3 PB4 PB5 PB6 PB7 PB8 PB9 PB10 PB12 PB13 PB14 PB15
VCAP
VSS VSSA
PA0 PA1 PA2 PA3 PA4 PA5 PA6 PA7 PA8 PA9 PA10 PA11 PA12 PA13 PA14 PA15
DISP_SCL
DISP_SI
DISP_A0
DISP_CS1B
DISP_RST
SPI_SCK
SPI_MISO
SPI_MOSI
COL05
COL03
USB_DM (D-)
USB_DP (D+)
SWDIO
SWCLK
COL06
WAKEUP01
POWER_ON
COL01
COL02
COL04
BUZZER
LED01
ROW01
VREFINT
ROW02
ROW03
ROW04
ROW05
ROW06
ROW07
ROW08
C13 2.2uF
U1 EA_DOGL128X-6
DISP_RST
DISP_CS1B
DISP_A0
DISP_SI
DISP_SCL
RST CS1B A0 SI SCL
CAP1P CAP1N CAP3P CAP2N CAP2P
VDD2 VDD
A1+ A2+ A3+
V0 V1 V2 V3 V4
VOUT
VSS
C1- C2- C3-
C2 1uF
C3 1uF
C4 1uF
C6 1uF
C7 1uF
C5 1uF
C8 1uF
C10 1uF
C9 1uF
U3 W25Q32JVSS
4.7K R2
CS CLK DI(IO0) DO(IO1) IO2 IO3
VCC GND
SPI_SCK
SPI_MOSI
SPI_MISO
BZ1 Buzzer
R5
BUZZER
R6
Q1 MMBT3904
LED01
5.1K R7
LED (RED)
D1
J2 USB_C_Receptacle_USB2.0_14P
VBUS
CC1 CC2
D- D- D+ D+
SHIELD GND
R8 5.1K
R9 5.1K
USB_DM (D-)
USB_DP (D+)
D2 BAT54C
BT1 2xAAA (1.5V)
C15 4.7 uF
U4 ADP2108AUJ-3.3
Vin EN SW GND FB
L1 1uH
C16 10 uF
C17 100nF
C18 100nF
C19 100nF
C20 100nF
C21 100nF
Display Visions EA DOGL128L-6 (L is reflective, without leds)
FSTN 128X64 ST7565R 320uA
https://www.digikey.es/es/products/detail/display-visions/EA-DOGL128L-6/4896695
https://www.lcd-module.com/eng/pdf/grafik/dogl128-6e.pdf
Regulators: DM42 LD3985, OpenRPNCalc TPS61222TCK, PUSH Panasonic EVQQ2B01W
Sheet: /
File: DM50.kicad_sch
Title: DM50 Calculator
Size: A4
Date: 2023-01-13
Rev: 0.1
KiCad E.D.A. 8.0.1
Id: 1/1