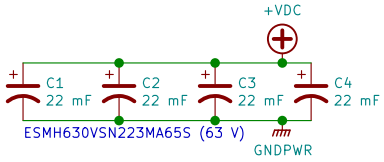

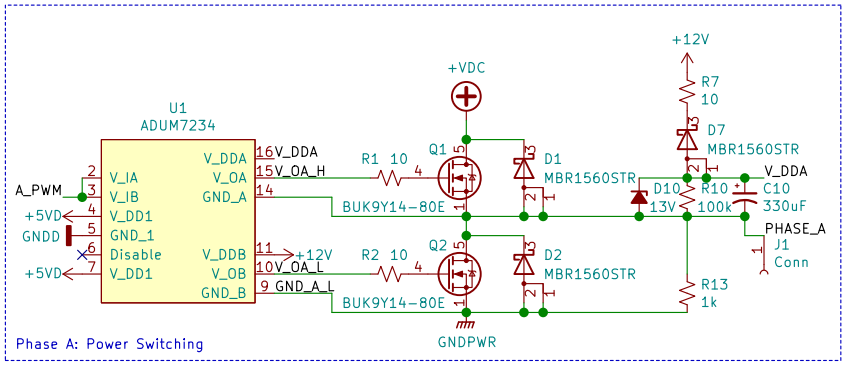

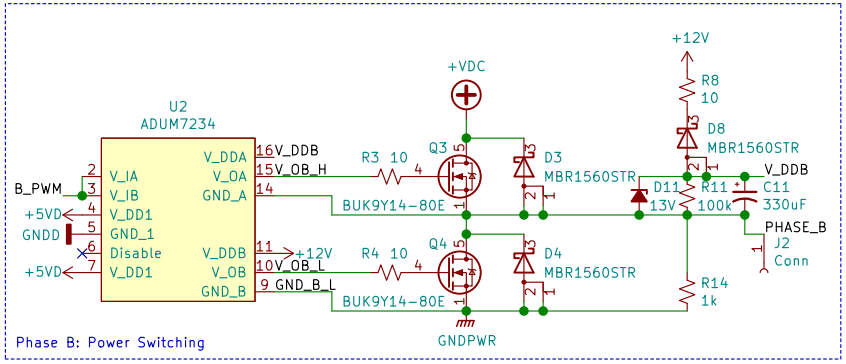

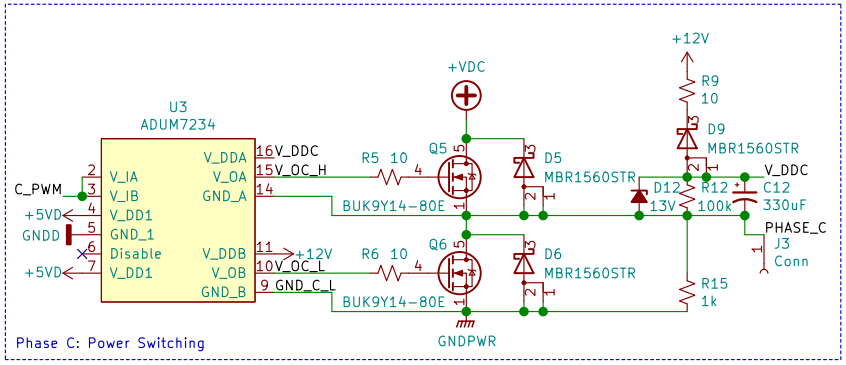

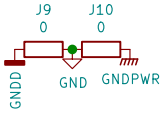

Nominal (12 to 24) V, 60 A (1440 W)
~ 2 HP (3 Phase)

P_GateDrive ~ 2 W

Sheet: /
File: BLDC_Cont.sch

Title:

Size: A4	Date:	**Rev:**
KiCad E.D.A. kicad (5.1.9)-1		Id: 1/1