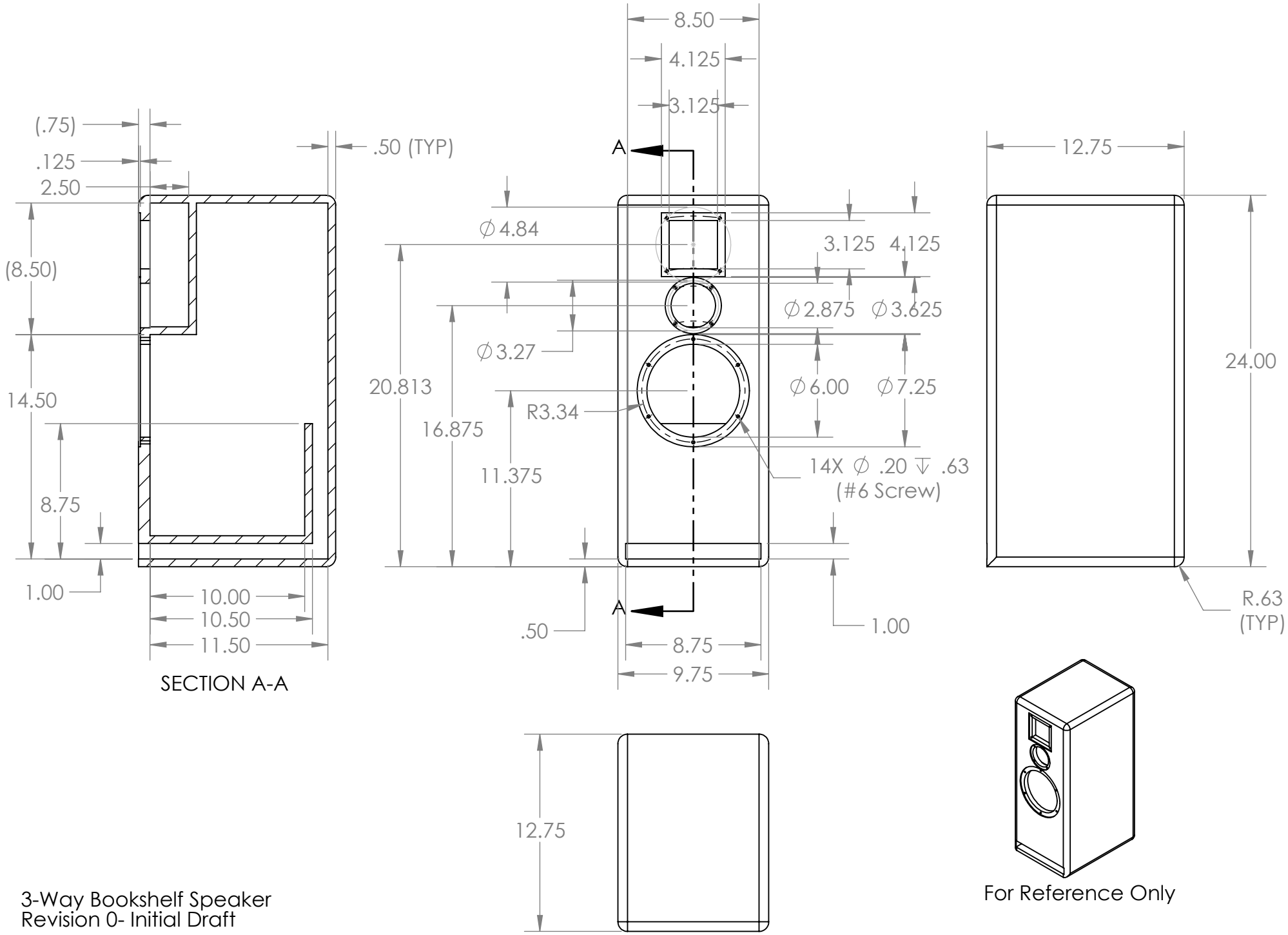

3-Way Bookshelf Speaker
Revision 0- Initial Draft

SOLIDWORKS Maker Product. For Personal Use Only.