TWILIGHT: 2000™ 2nd Edition

TM2002

Infantry WEAPONS of the World

Loren K. Wiseman

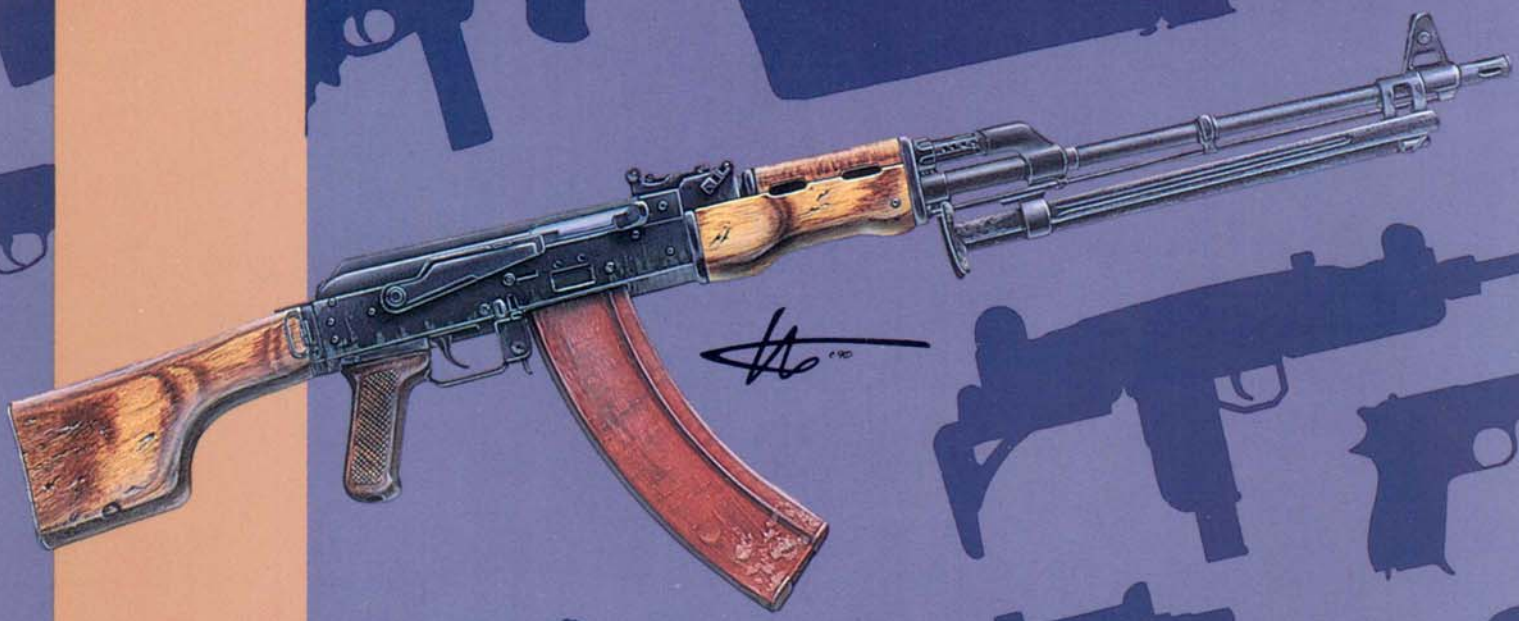

GDW GAMES

Infantry WEAPONS of the World

Loren K. Wiseman

SINCE 1973
GDW GAMES

CREDITS

Design: Loren K. Wiseman
Additional Design: Frank Chadwick
Art Direction and Interior Art: Kirk Wescom
Graphic Design and Production: Amy Doubet and Lamont Fullerton
Cover Art: Steve Venters
Additional Interior Art: Steve Bryant
Text Manager: Michelle Sturgeon
Text Processing: Julia Martin and Elizabeth Meier

Infantry Weapons of the World

Copyright©1991 GDW, Inc.
Made in USA. Printed in USA. All rights reserved.
ISBN 1-55878-068-8.
Twilight: 2000 is GDW's trademark for its roleplaying game of World War III.

SINCE 1973
GDW GAMES
P.O. Box 1646
Bloomington, IL 61702-1646

CONTENTS

Introduction **4**
Pistols **5**
Automag .44, Beretta M34, Browning .25, Browning HP-35 5
Colt Detectives Special, M1911A1, Positive/10, Positive/12.7 6
Colt Police Positive/15, Python/6.6, Python/10.2, Python/15.2 7
Colt Python/20.3, COP .357, HS .22, HS Derringer 8
HK-4, HK P9S, M9 (Beretta M92S), M14 Nambu 9
M1933 Tokarev, Mamba, Mauser HSc, Mauser M1896 10
P7 M13, P-08 Luger/10.2, P-08 Luger/15.2, P-08 Luger/19 11
PA-15, P-64, PM Makarov, Remington XP-100 12
Ruger P-85, Ruger Blackhawk, S&W 29/16.5, S&W 29/21.3 13
S&W 29/10.2, S&W 19/6.6, S&W 19/10.2, S&W 19/15.3 14
S&W 27/9, S&W 27/13, S&W 27/15, S&W 27/21 15
S&W 36, S&W 39, 439, 639, S&W 59, 459, 659, SIG P-210-2 16
Steyr GB80, Vz-52, Walther P-38, Walther PPK 17
Webley Mk 6, Webley Fosbury, Welrod .32, Wildey .45 WM 18
Submachineguns **19**
180 M-2, AKR 19
AMD-65, Beretta M12 20
Beretta M38A, Beretta M93R 21
Bushmaster, M177 22
Colt 9mm SMG, Colt Scamp 23
F1A1, HM-3 24
Ingram M10 9mm, Ingram M10 .45 25
Ingram M11, K-50 26
L2A3 Sterling, L34A1 Sterling 27
M-45 Carl Gustav, M3A1 28
M231, Madson M50 29
MAT-49, Mauser M32 30
Mini-Uzi, MP-5A2 31
MP-5K, MP-5SD3 32
MP18-1, MP-40 33
MPi-69, OSS M3 34
Owen Mk I, PM-9 35
PM-63, PPSh-41 36
PPSh-43, Rexim F.V. Mk 4 37
S&W M76, Sidewinder SS-1 38
Stechkin, Sten Mk II 39
Sten Mk IIS, Thompson M1 40
Thompson M1928, Type 64 41
Uzi, VP-70 42
Vz-24, Vz 61/62 Skorpion 43
Rifles **44**
.50 Hawken, .69-Caliber Musket 44
.460 Weatherby, AK-47 45
AKM, AKMS 46
AKMR, AK-74 47
Armington Laser Carbine-2, AR-7 Explorer 48
AR-10, AR-18 49
AR-70, AR-180 50
Arisaka Model 99, Barrett M82 "Light Fifty" 51
BM-59, C3 52
De Lisle Carbine, Enfield No. 4, Mk I 53
FA-MAS, FG-42 54
FN-CAL, FN-FAL 55
FN-FNC, FN-LAR/L1A1 56
FR-F1, G3 57
G11, Galil ARM 58
H&H .600 Nitro, H&K 33A2 59
KAR-98K, L42A1 60
L85 IWS, M1 Carbine 61
M1 Garand, M2 Carbine 62
M14, M16A1/AR-15 63
M16A2, M21 64
M40, MAS-49/56 65
Mk I Boys ATR, MKS 66
MP-44, Nagant M1891/30 67
PSG1, PTRS-41 68
PzB 39, Remington M700 69
Ruger Mini-14/AC-556, SIG 510-4 70
SKS, Springfield 1873 71
Springfield 1903, Stoner M22 Rifle 72
Stoner M23 Carbine, Steyr AUG 73
Steyr AUG Carbine, Steyr SSG-69 74
SVD, Type 64 75
Valmet M71, Vz-54 76
Vz-58V, WA-2000 77
Winchester M70 African, Winchester 1873 78
Winchester 1894, BAR M1918A2 79
AAT-52, Bren L2A4 80
RPK, RPK-74 81
M249 SAW 82
Machineguns **82**
Colt M1895/1914 82
DP, DShK 83
FMM 24/29, HK-21 84
KPV, L86A1 LSW 85
Lewis Mk I, M214 6-Pac 86
M2HB, M60 87
M134 Minigun, Browning M1919A4 88
MAG, MG-3 89
MG-08, MG-34 90
MG-42, PK 91
PKM, RPD 92
Bren Mk II, Browning M1917A1 93
SG-43, Stoner LMG 94
Stoner M207/Mk 23 Commando, Steyr AUG LMG 95
Vickers Mk I, Vz-59 96
Shotguns **97**
AA-12, Browning Autoriot 97
H&K CAW, High Standard M10B 98
Ithaca Autoburglar, M500 ATP8S 99
M1917 Trench Gun, Remington 870P 100
Savage 311-R, SPAS-15 101
Price List **102**
Small Arms and Machinegun Ammunition 102
Pistols, Submachineguns 103
Rifles, Machineguns, Shotguns 104

INFANTRY WEAPONS

With the second edition of **Twilight: 2000**, the combat system and small arms were radically changed. Unfortunately, this necessitated scrapping the old weapons statistics. When the revision was issued, we decided not to try to include all the new ratings in the basic rules, but to include a wide enough selection of weapons to allow referees to recreate important armies. We also decided to publish new ratings for small arms as soon as possible. This booklet is the result.

The appearance of **Merc: 2000** and the imminent publication of **Dark Conspiracy** and **Cadillacs & Dinosaurs** means that players of these games (all of them based on the same basic system and thus using compatible weapons) will need a variety of weapons not necessary in the **Twilight: 2000** situation. **Infantry Weapons of the World** addresses the needs of all of these games, in addition to serving as a basic resource for world small arms.

Corrections: In rating the weapons for this book, Frank and I took the opportunity to introduce a number of minor corrections, remove a few inconsistencies, and fine tune things a bit. These ratings are considered authoritative over the ratings in the basic game. One of the main differences was to increase damages for many pistol rounds, adjust some ranges for more realism, and introduce a little more distinction between some calibers (primarily between the .357 Magnum and .44 Magnum).

Folding Stocks: Weapons with folding stocks have two bulk ratings. The rating on the left is with the stock folded, the rating on the right is with it extended. *Aimed fire is possible only with the stock extended.* Folding or extending a stock counts as an action.

Quick Kill (New Rule): Any *aimed shot* which hits the chest or head may constitute a killing shot. Roll a D10. If the roll is less than or equal to the damage value of the shot, the target is instantly killed except on a roll of 10 exactly. If the hit was scored on an area protected by armor, roll versus the remaining damage value of the round. For automatic fire, roll only once per phase (regardless of the number of shots that hit). This rule should be applied only to NPCs. It is recommended that PCs who suffer a killing wound instead suffer enough damage to increase the wound level of the head or chest to at least serious if unwounded (and critical if already serious), and in addition take the normal damage inflicted by the round.

RATING FORMULAS

No matter how large we made this book, we would have to leave out some weapon or cartridge that someone, somewhere, considers vitally important. Rating firearms for **Twilight: 2000** and related systems is a combination of calculation and referee fudging. We have, as a convenience to our referees and players, included some notes on the system of calculation we used.

You will need a reference work which gives muzzle velocity, bullet weight (that's the weight of the bullet only, not the weight of the cartridge) and the weapon's weight. You will also need to know a couple of things about the weapon itself, such as the presence of folding stocks, magazine capacity, and so on.

Rate of Fire (ROF): Rate of fire is based on the cyclical ROF of the weapon. The various types of action are described. Simply pick the one that comes closest (bolt action, semiautomatic, double-action revolver, single shot, etc.). If a fully automatic weapon has a burst limiter, use that number as the ROF. Otherwise, slow-firing automatic weapons (those with a cyclical ROF of less than 700) have a rate of fire of 5; fast automatic weapons (those with a cyclical ROF of between 701 and 1000) have a rate of fire of 10. Extremely high rates of fire get even higher ratings (1001 to 5000 gets 50, over 5000 gets 100).

Damage (Dam): To calculate damage, you need to know the weapon's muzzle energy. Muzzle energy is determined by the following:

$$E=MV^2$$

E is muzzle energy; *M* is the mass of the bullet in grams; and *V* is the muzzle velocity in thousands of feet per second (yes, I know we are mixing units of measure here, but it works). Once you have muzzle energy, you plug that into the damage formula:

$$D=(\sqrt{E}\div 2)\times .66$$

D is the damage (Dam) value, and *E* is the muzzle energy determined above.

Penetration (Pen): There is no easy formula for penetration, so it's a judgment call. Compare the caliber of the round with one or more that have already been rated and extrapolate from those numbers.

Bulk (Blk): Bulk represents the handiness of the weapon and the speed with which it can be brought into action. Bulk is related to the length of the weapon, with a slight fudge factor. Weapons less than 15 cm are bulk 0; 16-30 cm are bulk 1; 31-45 cm are bulk 2; 46-75 cm are bulk 3; 76-90 cm are bulk 4; and 91 cm and up are bulk 5.

Magazine Capacity (Mag): For consistency, pick the most common magazine where there are several. We do not include the round in the chamber. The types of magazines are defined in the basic rules; simply find the description that fits (or comes closest).

Recoil (SS and Brst): The recoil value of a single shot is determined by the following formula:

$$R=\sqrt{E}\div W$$

R is the recoil of a single shot; *E* is muzzle energy; and *W* is the weight of the loaded weapon in kilograms. In addition, weapons with particularly high muzzle energies have the following modifiers added to their recoil value:

$\sqrt{E}$	*Modifier*
10	+1
15	+2
20	+3
25	+4

After making this addition, double all single-shot recoils (except for pistols). For burst fire, plug the individual recoil value into a second formula:

$$B=(RN)\div 2$$

B is the recoil of a burst; *R* is the recoil value of a single shot; and *N* is the number of bullets in the burst.

Other factors change recoil. A bipod halves the recoil of a weapon. A tripod halves the recoil of the weapon, and the weight of the tripod is added to the weight of the weapon when calculating recoil values. Pistols (only) have their recoil halved when a *stock* is attached (and extended, if it is a folding stock).

Range (Rng): There is no simple formula for range. For consistency, compare the range of the weapon to be rated (in meters) to a few similar weapons we have rated and extrapolate from those numbers. Remember to consider the difference between effective and maximum ranges (effective range is the range within which 50% or more of the rounds will strike a man-sized target, while maximum range is as far as the bullet will carry when the weapon is at full elevation). We use effective range as long range for our purposes and recalculate the table value from there (halved for medium, halved again for close, which is the value given on the table).

.44 Automag

.44 Automag (Semiautomatic): Clint Eastwood takes a break from his .44 Magnum to use the .44 Automag in one of his Dirty Harry films, making this rare firearm better known than most large-bore pistols.

Ammo: .44 Automagnum
Wt: 1.8 kg
Mag: 7 box
Price: $4000 (R/—)

						—Recoil—		
Weapon	*ROF*	*Dam*	*Pen*	*Blk*	*Mag*	*SS*	*Brst*	*Rng*
.44 Automag	SA	3	1-Nil	1	7	4	—	20

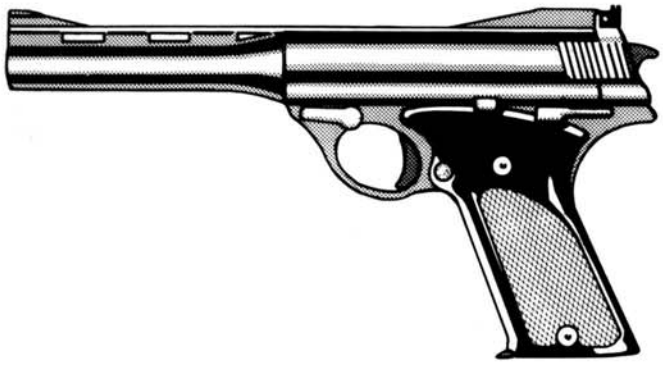

Beretta M34

Beretta M34 (Semiautomatic): The M34 was the standard sidearm of the Italian Army in WWII and was manufactured by the renowned weapons-making family of Beretta (in business since the 16th century). The M34 is compact and highly sought after.

Ammo: .380 ACP
Wt: 0.8 kg
Mag: 7 box
Price: $400 (R/R)

						—Recoil—		
Weapon	*ROF*	*Dam*	*Pen*	*Blk*	*Mag*	*SS*	*Brst*	*Rng*
M34	SA	1	Nil	1	7	3	—	10

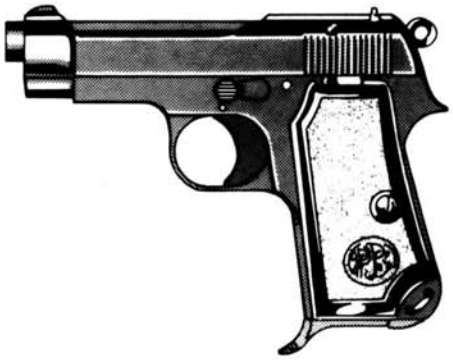

Browning .25

Browning .25 (Semiautomatic): This is a small, readily concealable automatic, and that is about all that can be said for it.

Ammo: .25 ACP
Wt: 0.4 kg
Mag: 10 box
Price: $100 (C/R)

						—Recoil—		
Weapon	*ROF*	*Dam*	*Pen*	*Blk*	*Mag*	*SS*	*Brst*	*Rng*
.25	SA	1	Nil	0	10	4	—	4

Browning HP-35

Browning HP-35 (Semiautomatic): The standard military sidearm of the British (and several other armies). It is considered by many to be the finest 9mm semiautomatic pistol made.

Ammo: 9mm P
Wt: 1.1 kg
Mag: 13 box
Price: $150 (S/R)

						—Recoil—		
Weapon	*ROF*	*Dam*	*Pen*	*Blk*	*Mag*	*SS*	*Brst*	*Rng*
HP-35	SA	1	Nil	1	13	2	—	12

Colt Detectives Special

Colt Detectives Special (Revolver): Developed during the 1930s, the Detectives Special is simply the snub-nosed version of the Colt Police Positive/10 revolver.

Ammo: .38 Special
Wt: 0.7 kg
Mag: 6 revolver
Price: $375 (C/R)

						—Recoil—		
Weapon	*ROF*	*Dam*	*Pen*	*Blk*	*Mag*	*SS*	*Brst*	*Rng*
Det. Special	DAR	1	Nil	1	6R	4	—	4

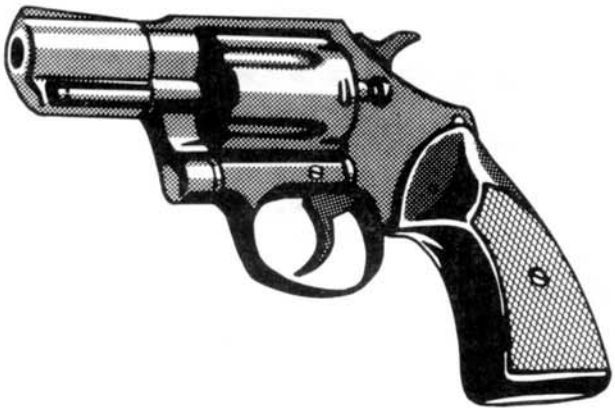

Colt M1911A1

Colt M1911A1 (Semiautomatic): The standard military sidearm of the United States until the late 1980s, the M1911A1 has been supplanted as general issue by the 9mm M9. However, M9 procurement has never been sufficient to completely replace the M1911A1 in military use, and thus it is still encountered, especially in national guard units.

A number of civilian versions of the M1911A1 are made, including conversions to other calibers. The conversion to 10mm is among the most popular.

Ammo: .45 ACP
Wt: 1.4 kg
Mag: 7 box (6 box for 10mm variant)
Price: $100 (C/S)

						—Recoil—		
Weapon	*ROF*	*Dam*	*Pen*	*Blk*	*Mag*	*SS*	*Brst*	*Rng*
M1911A1	SA	2	Nil	1	7	3	—	12
10mm	SA	2	1-Nil	1	6	3	—	15

Colt Police Positive/10

Colt Police Positive/10 (Revolver): Developed during the 1930s, the Police Positive revolver is one of the most common police weapons in the world.

Ammo: .38 Special
Wt: 0.8 kg
Mag: 6 revolver
Price: $450 (C/R)

						—Recoil—		
Weapon	*ROF*	*Dam*	*Pen*	*Blk*	*Mag*	*SS*	*Brst*	*Rng*
Pos/10	DAR	1	Nil	1	6R	3	—	10

Colt Police Positive/12.7

Colt Police Positive/12.7 (Revolver): A longer-barreled version of the Police Positive.

Ammo: .38 Special
Wt: 0.9 kg
Mag: 6 revolver
Price: $450 (C/R)

						—Recoil—		
Weapon	*ROF*	*Dam*	*Pen*	*Blk*	*Mag*	*SS*	*Brst*	*Rng*
Pos/12.7	DAR	1	Nil	1	6R	3	—	12

Colt Police Positive/15

Colt Police Positive/15 (Revolver): A still longer-barreled version of the Police Positive.

Ammo: .38 Special
Wt: 1.1 kg
Mag: 6 revolver
Price: $475 (C/R)

						—Recoil—		
Weapon	*ROF*	*Dam*	*Pen*	*Blk*	*Mag*	*SS*	*Brst*	*Rng*
Pos/15	DAR	1	Nil	1	6R	2	—	12

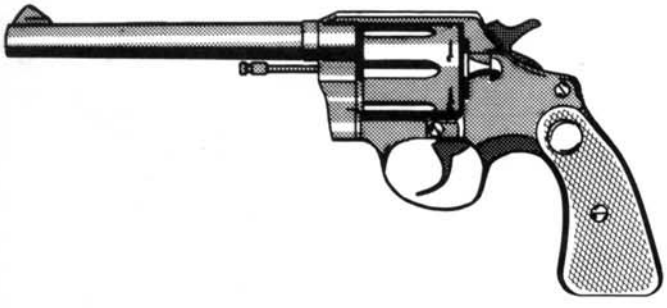

Colt Python/6.6

Colt Python/6.6 (Revolver): A top-quality, high-powered revolver from one of the world's premier arms makers.

Ammo: .357 Magnum
Wt: 1.1 kg
Mag: 6 revolver
Price: $650 (S/R)

						—Recoil—		
Weapon	*ROF*	*Dam*	*Pen*	*Blk*	*Mag*	*SS*	*Brst*	*Rng*
Python/6.6	DAR	2	Nil	1	6R	3	—	4

Colt Python/10.2

Colt Python/10.2 (Revolver): A longer-barreled version of the basic Python.

Ammo: .357 Magnum
Wt: 1.2 kg
Mag: 6 revolver
Price: $650 (S/R)

						—Recoil—		
Weapon	*ROF*	*Dam*	*Pen*	*Blk*	*Mag*	*SS*	*Brst*	*Rng*
Python/10.2	DAR	2	1-Nil	1	6R	3	—	12

Colt Python/15.2

Colt Python/15.2 (Revolver): A still longer-barreled version of the basic Python.

Ammo: .357 Magnum
Wt: 1.4 kg
Mag: 6 revolver
Price: $700 (S/R)

						—Recoil—		
Weapon	*ROF*	*Dam*	*Pen*	*Blk*	*Mag*	*SS*	*Brst*	*Rng*
Python/15.2	DAR	2	1-Nil	1	6R	3	—	16

Colt Python/20.3

Colt Python/20.3 (Revolver): A still longer-barreled version of the basic Python.

Ammo: .357 Magnum
Wt: 1.6 kg
Mag: 6 revolver
Price: $725 (S/R)

						—Recoil—		
Weapon	*ROF*	*Dam*	*Pen*	*Blk*	*Mag*	*SS*	*Brst*	*Rng*
Python/20.3	DAR	2	1-Nil	2	6R	3	—	18

COP .357

COP .357 (Semiautomatic): This four-barreled "pepperbox" firearm was intended as a backup weapon for police officers who were forced to give up their main sidearm. The barrels must be fired in sequence; they cannot be fired simultaneously.

Ammo: .357 Magnum
Wt: 0.9 kg
Mag: 4 individual
Price: $250 (S/—)

						—Recoil—		
Weapon	*ROF*	*Dam*	*Pen*	*Blk*	*Mag*	*SS*	*Brst*	*Rng*
COP .357	SA	2	1-Nil	0	4i	5	—	4

High Standard .22

High Standard .22 (Semiautomatic): This is a very reliable, lightweight, easily handled semiautomatic pistol in a small caliber.

Ammo: .22 long rifle
Wt: 1.3 kg
Mag: 6 box
Price: $250 (C/R)

						—Recoil—		
Weapon	*ROF*	*Dam*	*Pen*	*Blk*	*Mag*	*SS*	*Brst*	*Rng*
HS .22	SA	–1	Nil	0	6	2	—	10

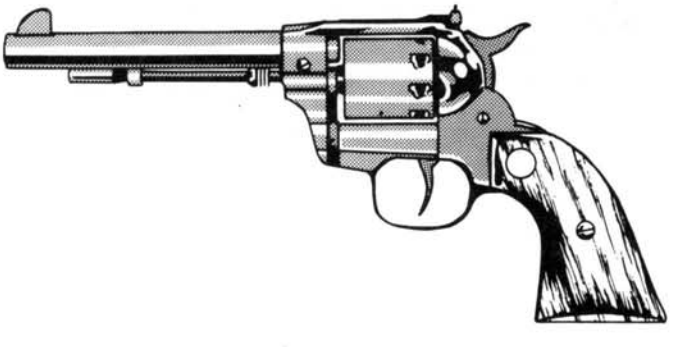

High Standard Derringer

High Standard Derringer (Semiautomatic): The High Standard double-barreled Derringer is intended to serve as a readily concealable defensive weapon. The barrels must be fired in sequence; they cannot be fired simultaneously.

Ammo: .22 Magnum
Wt: 0.3 kg
Mag: 2 individual
Price: $75 (S/R)

						—Recoil—		
Weapon	*ROF*	*Dam*	*Pen*	*Blk*	*Mag*	*SS*	*Brst*	*Rng*
HS Der.	SA	1	Nil	0	2i	8	—	4

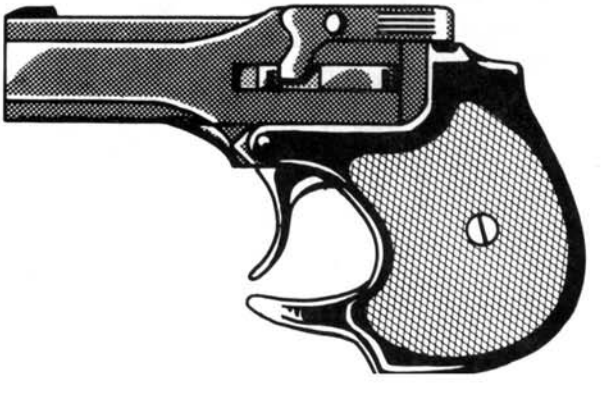

HK-4

HK-4 (Semiautomatic): The HK-4 is a small, German-made semiautomatic pistol with four interchangeable barrel/magazine sets. In two minutes, one barrel can be removed and another substituted. When the appropriate magazine is inserted, the weapon is ready to fire.

Ammo: .22 long rifle, .25 ACP, .32 ACP or .380 ACP
Wt: 0.3 kg
Mag: 8/7/7/7 box
Price: $180 (S/R)

						—Recoil—		
Weapon	*ROF*	*Dam*	*Pen*	*Blk*	*Mag*	*SS*	*Brst*	*Rng*
HK-4/.22 LR	SA	–1	Nil	1	8	1	—	8
HK-4/.25 ACP	SA	1	Nil	1	7	3	—	8
HK-4/.32 ACP	SA	1	Nil	1	7	4	—	10
HK-4/.380 ACP	SA	1	Nil	1	7	5	—	12

HK P9S

HK P9S (Semiautomatic): The P9S is made by the German arms firm of Heckler and Koch, and incorporates the same roller-locking feature as the G3 assault rifle.

Ammo: 9mm P
Wt: 1.1 kg
Mag: 9 box
Price: $700 (C/S)

						—Recoil—		
Weapon	*ROF*	*Dam*	*Pen*	*Blk*	*Mag*	*SS*	*Brst*	*Rng*
HK P9S	SA	1	Nil	0	9	3	—	12

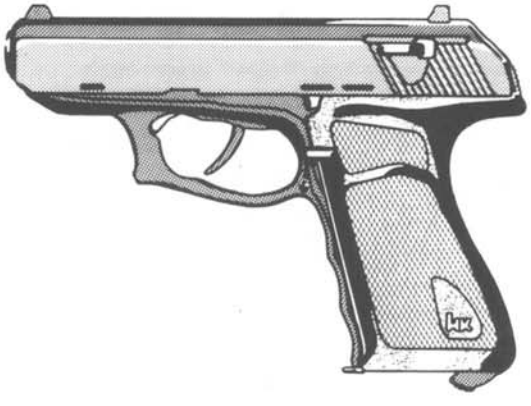

M9 (Beretta M92S)

M9 (Beretta M92S) (Semiautomatic): The standard side-arm for US military forces. It is essentially identical to the M92S (the civilian version).

Ammo: 9mm P
Wt: 1 kg
Mag: 15 box
Price: $150 (V/S)

						—Recoil—		
Weapon	*ROF*	*Dam*	*Pen*	*Blk*	*Mag*	*SS*	*Brst*	*Rng*
M9 (M92S)	SA	1	Nil	1	15	3	—	12

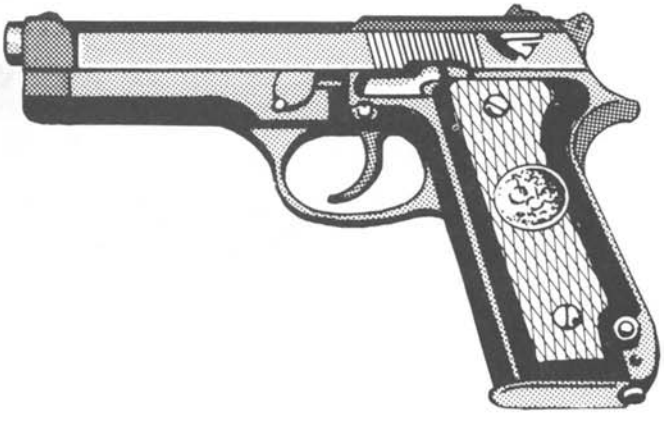

M14 Nambu

M14 Nambu (Semiautomatic): The most commonly issued Japanese military pistol in WWII, the Nambu is found throughout Asia, but is not common anywhere else (although many were brought home by American servicemen after WWII). The ammunition is unique, although a small quantity is still manufactured in the US for firearms enthusiasts.

Ammo: 8mm N
Wt: 1 kg
Mag: 8 box
Price: $550 (S/S)

						—Recoil—		
Weapon	*ROF*	*Dam*	*Pen*	*Blk*	*Mag*	*SS*	*Brst*	*Rng*
M14 Nambu	SA	1	Nil	1	8	3	—	10

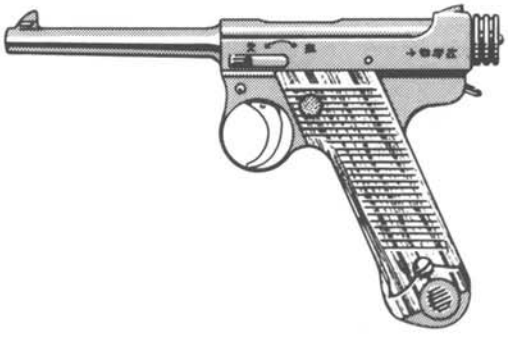

M1933 Tokarev

M1933 Tokarev (Semiautomatic): Formerly in widespread use by Eastern European military and police, the M1933 Tokarev has now been widely supplanted by the Makarov. Due to the large numbers produced, it is still found in use by some police and is widely used by militias. It is notable for its lack of a safety catch.

Ammo: 7.62mm T
Wt: 0.5 kg
Mag: 8 box
Price: $100 (R/C)

						—Recoil—		
Weapon	*ROF*	*Dam*	*Pen*	*Blk*	*Mag*	*SS*	*Brst*	*Rng*
M1933	SA	1	Nil	1	8	4	—	12

Mamba

Mamba (Semiautomatic): The Mamba is manufactured for domestic use and for export by the Republic of South Africa.

Ammo: 9mm P
Wt: 1.3 kg
Mag: 15 box
Price: $450 (S/S)

						—Recoil—		
Weapon	*ROF*	*Dam*	*Pen*	*Blk*	*Mag*	*SS*	*Brst*	*Rng*
Mamba	SA	1	Nil	1	15	3	—	12

Mauser HSc

Mauser HSc (Semiautomatic): Developed before the war as a civilian weapon, the HSc was the formal sidearm of the German Navy and Air Force during WWII.

Ammo: 9mm P
Wt: 0.7 kg
Mag: 8 box
Price: $350 (S/S)

						—Recoil—		
Weapon	*ROF*	*Dam*	*Pen*	*Blk*	*Mag*	*SS*	*Brst*	*Rng*
HSc	SA	1	Nil	1	8	3	—	10

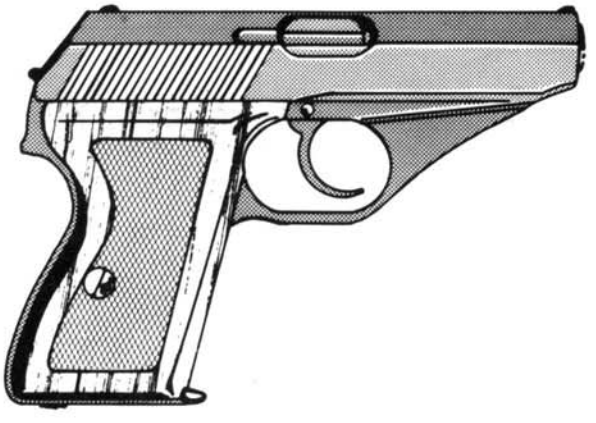

Mauser M1896

Mauser M1896 (Semiautomatic): Known as the "Broomhandle" Mauser, the M1896 was the first successful semiautomatic pistol design. By the late 1980s, it had become a collector's item in the US and Europe, but was still in service with some police agencies throughout the rest of the world. The weapon has an integral internal magazine loaded from 10-round disposable stripper clips. The stock is hollow and can serve as a holster.

Ammo: 7.62mm T
Wt: 1.2 kg (*Stock Wt:* 0.5 kg)
Mag: 10 box (really uses a stripper clip to reload)
Price: $1000 (R/R)

						—Recoil—		
Weapon	*ROF*	*Dam*	*Pen*	*Blk*	*Mag*	*SS*	*Brst*	*Rng*
M1896	SA	1	Nil	1	10	3	—	12
stock	SA	1	Nil	1	10	2	—	20

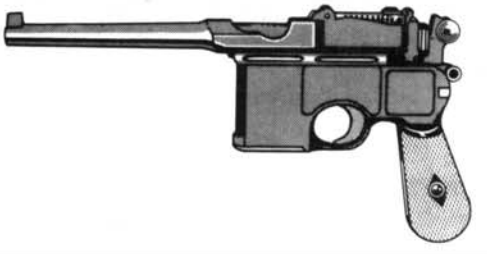

P7 M13

P7 M13 (Semiautomatic): The standard sidearm of German forces.

Ammo: 9mm P
Wt: 1 kg
Mag: 13 box
Price: $150 (V/S)

						—Recoil—		
Weapon	*ROF*	*Dam*	*Pen*	*Blk*	*Mag*	*SS*	*Brst*	*Rng*
P7 M13	SA	1	Nil	1	13	3	—	12

P-08 Luger/10.2

P-08 Luger/10.2 (Semiautomatic): The P-08 *(Pistole 1908)* Luger was one of the earliest self-loading pistol designs. Because it was adopted by the German Army in WWI and used through WWII, the Luger made numerous appearances in spy and war movies and is one of the most well-known pistols in the world. Thousands were made during the wars, and "look-alike" reproductions of the pistol were still being made in the 1990s.

Ammo: 9mm P
Wt: 1.1 kg
Mag: 8 box
Price: $800 (C/S)

						—Recoil—		
Weapon	*ROF*	*Dam*	*Pen*	*Blk*	*Mag*	*SS*	*Brst*	*Rng*
Luger/10.2	SA	1	Nil	1	8	3	—	12

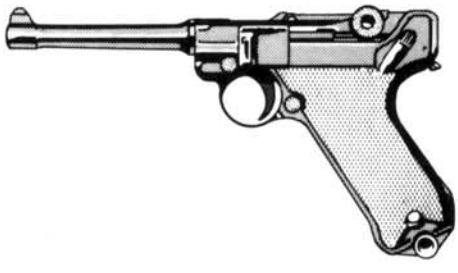

P-08 Luger/15.2

P-08 Luger/15.2 (Semiautomatic): A longer-barreled version of the basic Luger. The complexity and tightly fitted action make the Luger very sensitive to dirt and corrosion, a disadvantage in a military pistol.

Ammo: 9mm P
Wt: 1.2 kg
Mag: 8 box
Price: $850 (S/R)

						—Recoil—		
Weapon	*ROF*	*Dam*	*Pen*	*Blk*	*Mag*	*SS*	*Brst*	*Rng*
Luger/15.2	SA	1	Nil	1	8	2	—	12

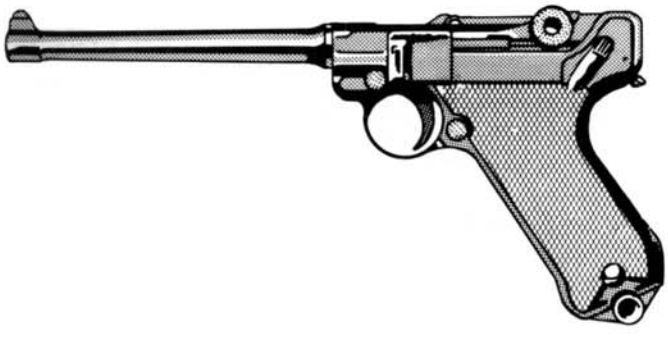

P-08 Luger/19

P-08 Luger/19 (Semiautomatic): This model of the Luger is often called the "artillery Luger" because it was issued to German artillerymen during WWI and WWII. It came with a shoulder stock and a 32-round snail-drum magazine (which can be used with other models, but is quite clumsy in them).

Ammo: 9mm P
Wt: 1.3 kg (*Stock Wt:* 0.4 kg)
Mag: 8 box, 32 round drum
Price: $925 (R/—)

						—Recoil—		
Weapon	*ROF*	*Dam*	*Pen*	*Blk*	*Mag*	*SS*	*Brst*	*Rng*
Luger/19	SA	1	Nil	2	8/32	2	—	16
stock	SA	1	Nil	3	8/32	2	—	24

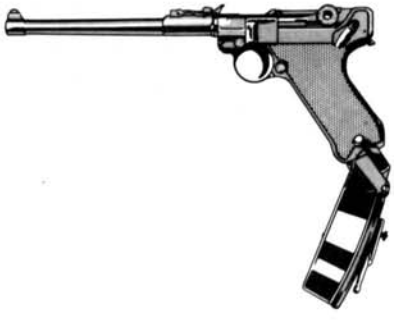

PA-15

PA-15 (Semiautomatic): The French standard military sidearm.

Ammo: 9mm P
Wt: 1 kg
Mag: 15 box
Price: $150 (S/R)

						—Recoil—		
Weapon	*ROF*	*Dam*	*Pen*	*Blk*	*Mag*	*SS*	*Brst*	*Rng*
PA-15	SA	1	Nil	1	15	2	—	12

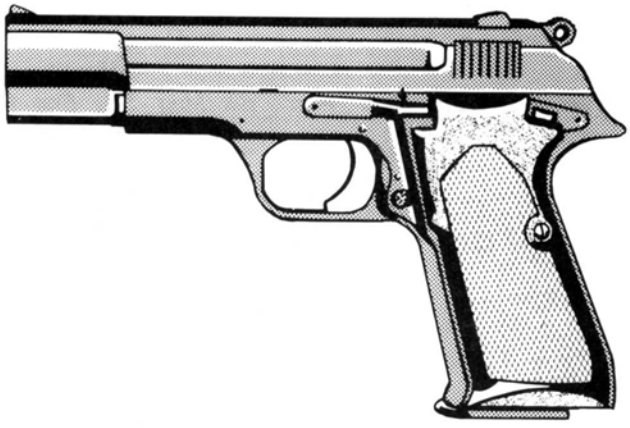

P-64

P-64 (Semiautomatic): The Polish standard military sidearm.

Ammo: 9mm M
Wt: 1 kg
Mag: 6 box
Price: $170 (R/S)

						—Recoil—		
Weapon	*ROF*	*Dam*	*Pen*	*Blk*	*Mag*	*SS*	*Brst*	*Rng*
P-64	SA	1	Nil	1	6	2	—	10

PM Makarov

PM Makarov (Semiautomatic): The standard military sidearm of most Eastern European states, widely used by police and internal security forces.

Ammo: 9mm M
Wt: 0.5 kg
Mag: 8 box
Price: $150 (S/V)

						—Recoil—		
Weapon	*ROF*	*Dam*	*Pen*	*Blk*	*Mag*	*SS*	*Brst*	*Rng*
PM Makarov	SA	1	Nil	1	8	3	—	10

Remington XP-100

Remington XP-100 (Single-Shot Pistol): This is a bolt-action pistol designed to fire rifle-sized cartridges. It is a favorite with wildcatters and ammo tinkerers.

Ammo: .221
Wt: 1.7 kg
Mag: 1 individual
Price: $350 (R/—)

						—Recoil—		
Weapon	*ROF*	*Dam*	*Pen*	*Blk*	*Mag*	*SS*	*Brst*	*Rng*
XP-100	BA	2	1-Nil	2	1i	3	—	40

Ruger P-85

Ruger P-85 (Semiautomatic): A semiautomatic pistol manufactured by Sturm-Ruger Inc., a manufacturer more famous for its revolvers.

Ammo: 9mm P
Wt: 0.9 kg
Mag: 14 box
Price: $500 (C/S)

						—Recoil—		
Weapon	*ROF*	*Dam*	*Pen*	*Blk*	*Mag*	*SS*	*Brst*	*Rng*
Ruger P-85	SA	1	Nil	1	14	3	—	12

Ruger Blackhawk

Ruger Blackhawk (Single-Action Revolver): A large-frame revolver designed to stand up to the heaviest .44 magnum loads. The Blackhawk is a single-action revolver, meaning that the hammer must be manually cocked for each shot.

Ammo: .44 Magnum
Wt: 1.5 kg
Mag: 6 revolver
Price: $500 (R/—)

						—Recoil—		
Weapon	*ROF*	*Dam*	*Pen*	*Blk*	*Mag*	*SS*	*Brst*	*Rng*
Blackhawk	SAR	3	2-Nil	2	6R	3	—	16

S&W Model 29/16.5

S&W Model 29/16.5 (Revolver): What Sean Connery's portrayal of James Bond did for the Walther PPK, Clint Eastwood as San Francisco Detective Inspector Harry Callahan did for the S&W Model 29 .44 Magnum revolver. The Model 29 is a large-frame revolver and looks like it could bring down a buffalo.

Ammo: .44 Magnum
Wt: 1.5 kg
Mag: 6 revolver
Price: $1000 (R/—)

						—Recoil—		
Weapon	*ROF*	*Dam*	*Pen*	*Blk*	*Mag*	*SS*	*Brst*	*Rng*
S&W 29/16.5	DAR	3	2-Nil	2	6R	4	—	16

S&W Model 29/21.3

S&W Model 29/21.3 (Revolver): A longer-barreled version of the basic Model 29.

Ammo: .44 Magnum
Wt: 1.6 kg
Mag: 6 revolver
Price: $1000 (R/—)

						—Recoil—		
Weapon	*ROF*	*Dam*	*Pen*	*Blk*	*Mag*	*SS*	*Brst*	*Rng*
S&W 29/21.3	DAR	3	2-Nil	2	6R	3	—	18

S&W Model 29/10.2

S&W Model 29/10.2 (Revolver): A shorter and more easily handled version of the basic Model 29.

Ammo: .44 Magnum
Wt: 1.4 kg
Mag: 6 revolver
Price: $900 (R/—)

						—Recoil—		
Weapon	*ROF*	*Dam*	*Pen*	*Blk*	*Mag*	*SS*	*Brst*	*Rng*
S&W 29/10.2	DAR	3	2-Nil	1	6R	4	—	12

S&W Model 19/6.6

S&W Mod. 19/6.6 (Revolver): Built on the S&W "K" frame, the Model 19 was introduced in the 1950s and was originally intended for law enforcement use only. It is now common in the hands of police and civilians alike.

Ammo: .357 Magnum
Wt: 1 kg
Mag: 6 revolver
Price: $350 (R/—)

						—Recoil—		
Weapon	*ROF*	*Dam*	*Pen*	*Blk*	*Mag*	*SS*	*Brst*	*Rng*
S&W 19/6.6	DAR	2	Nil	1	6R	4	—	4

S&W Model 19/10.2

S&W Mod. 19/10.2 (Revolver): A longer-barreled version of the Model 19.

Ammo: .357 Magnum
Wt: 1.1 kg
Mag: 6 revolver
Price: $350 (R/—)

						—Recoil—		
Weapon	*ROF*	*Dam*	*Pen*	*Blk*	*Mag*	*SS*	*Brst*	*Rng*
S&W 19/10.2	DAR	2	1-Nil	1	6R	4	—	12

S&W Model 19/15.3

S&W Mod. 19/15.3 (Revolver): A still longer-barreled version of the Model 19.

Ammo: .357 Magnum
Wt: 1.3 kg
Mag: 6 revolver
Price: $375 (R/—)

						—Recoil—		
Weapon	*ROF*	*Dam*	*Pen*	*Blk*	*Mag*	*SS*	*Brst*	*Rng*
S&W 19/15.3	DAR	2	1-Nil	2	6R	3	—	16

S&W Model 27/9

S&W Model 27/9 (Revolver): The S&W Model 27/9 was designed in the 1930s and was the first firearm to use the .357 cartridge. It reigned supreme as the most powerful revolver until the 1950s.

Ammo: .357 Magnum
Wt: 1.3 kg
Mag: 6 revolver
Price: $450 (R/—)

						—Recoil—		
Weapon	*ROF*	*Dam*	*Pen*	*Blk*	*Mag*	*SS*	*Brst*	*Rng*
S&W 27/9	DAR	2	1-Nil	1	6R	3	—	10

S&W Model 27/13

S&W Model 27/13 (Revolver): A longer-barreled version of the Model 27.

Ammo: .357 Magnum
Wt: 1.3 kg
Mag: 6 revolver
Price: $450 (R/—)

						—Recoil—		
Weapon	*ROF*	*Dam*	*Pen*	*Blk*	*Mag*	*SS*	*Brst*	*Rng*
S&W 27/13	DAR	2	1-Nil	1	6R	3	—	12

S&W Model 27/15

S&W Model 27/15 (Revolver): A still longer-barreled version of the Model 27.

Ammo: .357 Magnum
Wt: 1.4 kg
Mag: 6 revolver
Price: $475 (R/—)

						—Recoil—		
Weapon	*ROF*	*Dam*	*Pen*	*Blk*	*Mag*	*SS*	*Brst*	*Rng*
S&W 27/15	DAR	2	1-Nil	2	6R	3	—	16

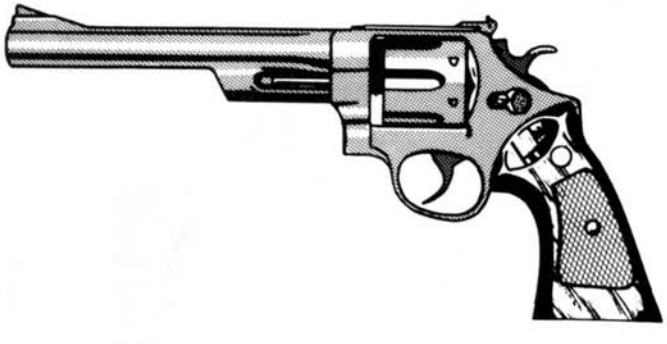

S&W Model 27/21

S&W Model 27/21 (Revolver): A still longer-barreled version of the Model 27.

Ammo: .357 Magnum
Wt: 1.4 kg
Mag: 6 revolver
Price: $475 (R/—)

						—Recoil—		
Weapon	*ROF*	*Dam*	*Pen*	*Blk*	*Mag*	*SS*	*Brst*	*Rng*
S&W 27/21	DAR	2	1-Nil	2	6R	3	—	18

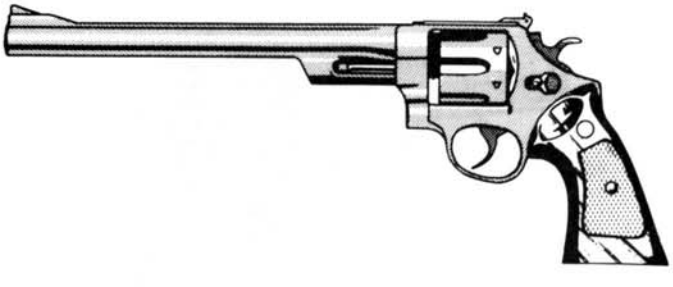

S&W Model 36

S&W Model 36 (Revolver): The S&W Model 36 (nicknamed the Chief's Special) is built on the small "J" frame, and its cylinder has room for only five rounds. Because of this, the Model 36 is favored by plainclothes detectives who must carry revolvers.

Ammo: .38 Special
Wt: 0.7 kg
Mag: 5 revolver
Price: $315 (S/R)

						—Recoil—		
Weapon	*ROF*	*Dam*	*Pen*	*Blk*	*Mag*	*SS*	*Brst*	*Rng*
S&W 36	DAR	1	Nil	1	5R	6	—	4

S&W Model 39, 439, 639

S&W Model 39, 439, 639 (Semiautomatic): This series of 9mm semiautomatic pistols is from a manufacturer more famous for its revolvers. The various model numbers are identical for game purposes.

Ammo: 9mm P
Wt: 0.9 kg
Mag: 8 box
Price: $485 (C/R)

						—Recoil—		
Weapon	*ROF*	*Dam*	*Pen*	*Blk*	*Mag*	*SS*	*Brst*	*Rng*
39, 439, 639	SA	1	Nil	1	8	3	—	12

S&W Model 59, 459, 659

S&W Model 59, 459, 659 (Semiautomatic): This series of 9mm semiautomatic pistols is similar to the 39 series, but has a larger-capacity staggered magazine. The series is popular with police and security forces. The various model numbers are identical for game purposes.

Ammo: 9mm P
Wt: 1 kg
Mag: 14 box
Price: $495 C/R)

						—Recoil—		
Weapon	*ROF*	*Dam*	*Pen*	*Blk*	*Mag*	*SS*	*Brst*	*Rng*
59, 459, 659	SA	1	Nil	1	14	3	—	12

SIG P-210-2 (Model 49)

SIG P-210-2 (Semiautomatic): Also known as the Model 49, this weapon is a Swiss-made semiautomatic pistol that is highly regarded and much sought after.

Ammo: 9mm P
Wt: 1.1 kg
Mag: 8 box
Price: $550 (S/R)

						—Recoil—		
Weapon	*ROF*	*Dam*	*Pen*	*Blk*	*Mag*	*SS*	*Brst*	*Rng*
SIG P-210-2	SA	1	Nil	1	8	3	—	12

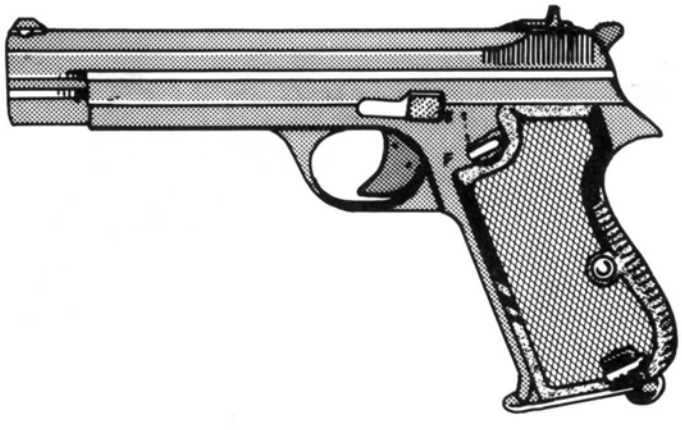

Steyr GB80

Steyr GB80 (Semiautomatic): This is a double-action, high-capacity, semiautomatic pistol of Austrian design and manufacture. It is used by a number of military and police forces worldwide, most notably Austria and Australia.

Ammo: 9mm P
Wt: 1.2 kg
Mag: 18 box
Price: $750 (S/R)

						—Recoil—		
Weapon	*ROF*	*Dam*	*Pen*	*Blk*	*Mag*	*SS*	*Brst*	*Rng*
Steyr GB80	SA	1	Nil	1	18	3	—	12

Vz-52

Vz-52 (Semiautomatic): Standard sidearm of Czech military forces.

Ammo: 7.62mm T
Wt: 0.5 kg
Mag: 8 box
Price: $100 (R/S)

						—Recoil—		
Weapon	*ROF*	*Dam*	*Pen*	*Blk*	*Mag*	*SS*	*Brst*	*Rng*
Vz-52	SA	1	Nil	1	8	4	—	12

Walther P-38

Walther P-38 (Semiautomatic): One of the most common firearms issued to German officers in WWII, the P-38 was designed to be a simpler, more rugged replacement for the Luger. It is still in use by many armies and police agencies worldwide.

Ammo: 9mm P
Wt: 1 kg
Mag: 8 box
Price: $650 (R/R)

						—Recoil—		
Weapon	*ROF*	*Dam*	*Pen*	*Blk*	*Mag*	*SS*	*Brst*	*Rng*
Walther P-38	SA	1	Nil	1	8	3	—	12

Walther PPK

Walther PPK (Semiautomatic): The Walther PPK (*Polizei Pistole Kriminal* or criminal police pistol) is a German pistol favored by European police agencies. It is best known as the weapon of the British MI-5 and MI-6 organizations. It was made famous in the public eye by Sean Connery's use of it in the *James Bond* films.

Ammo: .380 ACP
Wt: 0.8 kg
Mag: 7 box
Price: $500 (S/R)

						—Recoil—		
Weapon	*ROF*	*Dam*	*Pen*	*Blk*	*Mag*	*SS*	*Brst*	*Rng*
Walther PPK	SA	1	Nil	1	7	3	—	10

Webley Mk 6

Webley Mk 6 (revolver): A British WWI- and WWII-vintage revolver. The Mk 6 was replaced by the HP-35 as the standard British sidearm, but is still found with some police and paramilitary forces.

Ammo: .455
Wt: 1.2 kg
Mag: 6 revolver
Price: $350 (S/R)

						—Recoil—		
Weapon	*ROF*	*Dam*	*Pen*	*Blk*	*Mag*	*SS*	*Brst*	*Rng*
Mk 6	DAR	1	Nil	1	6R	2	—	8

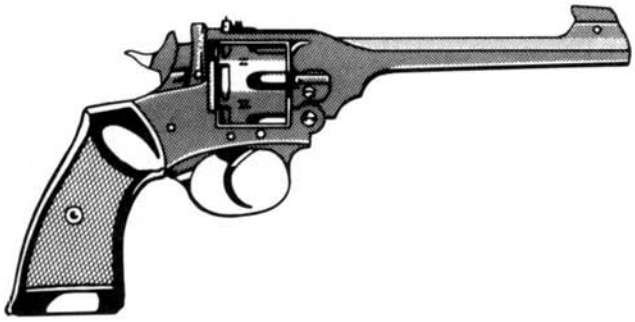

Webley Fosbury

Webley Fosbury (Revolver): Generations of mystery readers (and moviegoers) knew this pistol and no other since it was the weapon that killed Sam Spade's partner in *The Maltese Falcon.*

Ammo: .455
Wt: 1.4 kg
Mag: 6 revolver
Price: $450 (R/—)

						—Recoil—		
Weapon	*ROF*	*Dam*	*Pen*	*Blk*	*Mag*	*SS*	*Brst*	*Rng*
Fosbury	DAR	1	Nil	1	6R	2	—	8

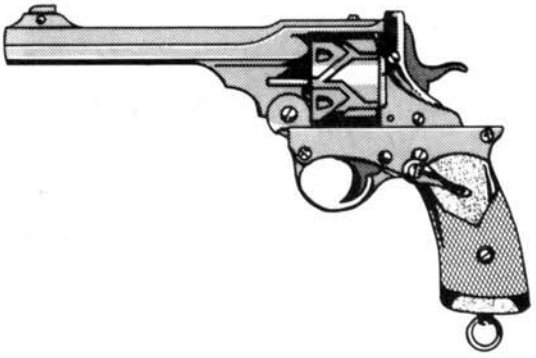

Welrod .32

Welrod .32 (Bolt-Action Pistol): The Welrod is a specially designed "assassination" pistol. It has an integral silencer and using subsonic cartridges for minimal firing noise. It is extremely rare.

Ammo: .32 subsonic
Wt: 0.9 kg
Mag: 6 individual
Price: $800 (—/—)

						—Recoil—		
Weapon	*ROF*	*Dam*	*Pen*	*Blk*	*Mag*	*SS*	*Brst*	*Rng*
Welrod .32	BA	1	Nil	2	6i	2	—	4

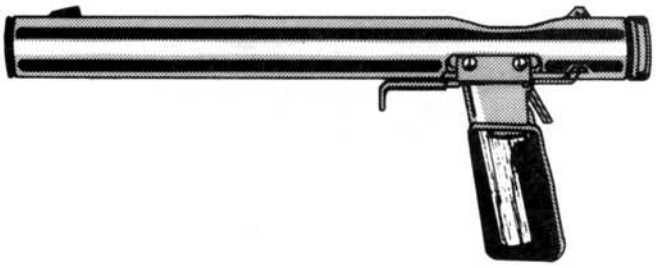

Wildey .45 WM

Wildey .45 WM (Semiautomatic Pistol): Another pistol whose popularity was due to a movie, the Wildey .45 WM was made famous by Charles Bronson in the *Death Wish* series of films. Since each weapon is essentially hand-built, the caliber can be just about anything desired. We have included a typical loading.

Ammo: .45 Winchester Magnum
Wt: 1.5 kg
Mag: 8 box
Price: $1200 (—/—)

						—Recoil—		
Weapon	*ROF*	*Dam*	*Pen*	*Blk*	*Mag*	*SS*	*Brst*	*Rng*
.45 WM	SA	4	2-Nil	1	8	4	—	20

180 M-2

180 M-2 (Submachinegun): This is an Austrian SMG in a very small caliber, but with a correspondingly high magazine capacity.

Ammo: .22 long rifle
Wt: 4.7 kg
Mag: 177 drum
Price: $250 (R/—)

						—Recoil—		
Weapon	*ROF*	*Dam*	*Pen*	*Blk*	*Mag*	*SS*	*Brst*	*Rng*
180 M-2	10	–1	Nil	5	177	1	5	20

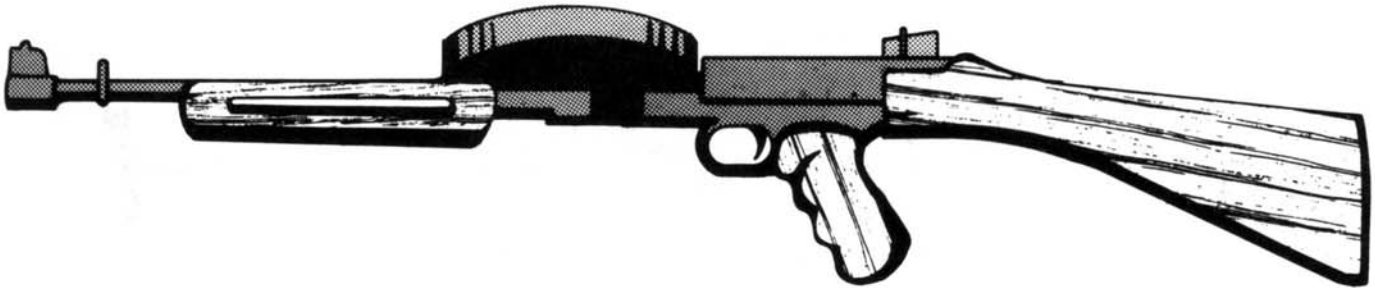

AKR

AKR (Submachinegun): The standard Eastern Bloc military submachinegun (with few exceptions), the AKR is merely a cut-down version of the AK-74. Although a bit heavy for a submachinegun, it has good accuracy and stopping power.

Ammo: 5.45mm B
Wt: 4 kg
Mag: 30 box
Price: $300 (S/C)

						—Recoil—		
Weapon	*ROF*	*Dam*	*Pen*	*Blk*	*Mag*	*SS*	*Brst*	*Rng*
AKR	5	3	1-Nil	2/3	30	3	8	30

AMD-65

AMD-65 (Submachinegun): A Hungarian submachinegun—basically, a shortened version of the AK-47.

Ammo: 7.62mm S
Wt: 4 kg
Mag: 30 box
Price: $300 (R/S)

						—Recoil—		
Weapon	*ROF*	*Dam*	*Pen*	*Blk*	*Mag*	*SS*	*Brst*	*Rng*
AMD-65	5	3	1-Nil	3/4	30	3	8	40

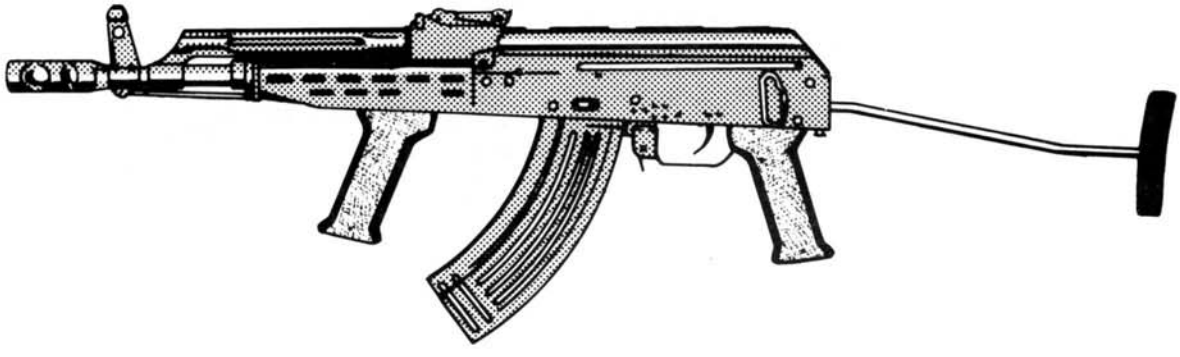

Beretta M12

Beretta M12 (Submachinegun): The Italian standard military and police submachinegun.

Ammo: 9mm P
Wt: 3.7 kg
Mag: 20 box or 40 box
Price: $400 (R/—)

						—Recoil—		
Weapon	*ROF*	*Dam*	*Pen*	*Blk*	*Mag*	*SS*	*Brst*	*Rng*
Beretta M12	5	1	Nil	2/3	20/40	2	5	30

Beretta M38A

Beretta M38A (Submachinegun): This weapon was the standard Italian military submachinegun in WWII.

Ammo: 9mm P
Wt: 5 kg
Mag: 40 box
Price: $700 (R/—)

						—Recoil—		
Weapon	*ROF*	*Dam*	*Pen*	*Blk*	*Mag*	*SS*	*Brst*	*Rng*
Beretta M38A	5	2	Nil	5	40	2	4	30

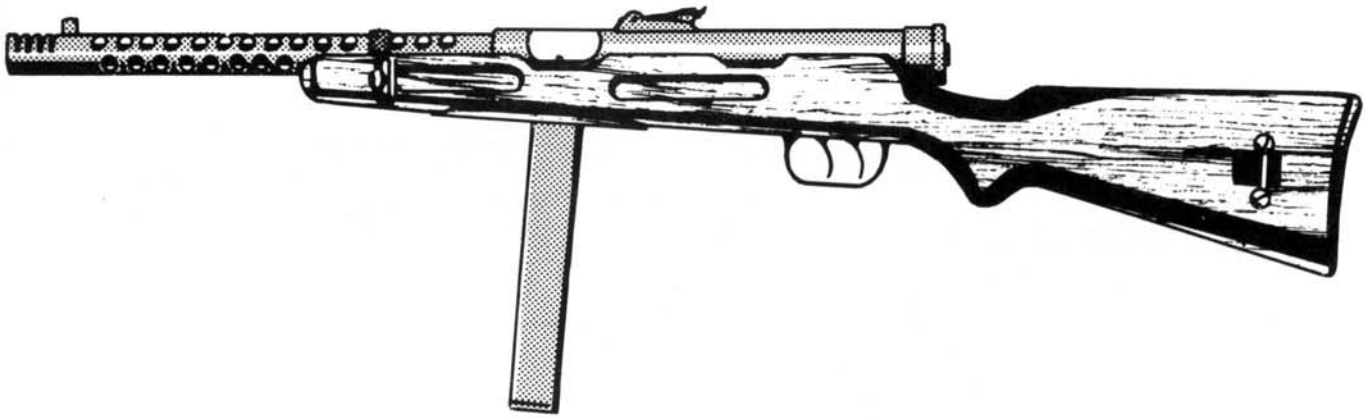

Beretta M93R

Beretta M93R (Submachinegun): This submachinegun is a heavily modified version of the M92 9mm pistol.

Ammo: 9mm P
Wt: 1.5 kg (1.8 kg with stock)
Mag: 20 box
Price: $650 (S/R)

						—Recoil—		
Weapon	*ROF*	*Dam*	*Pen*	*Blk*	*Mag*	*SS*	*Brst*	*Rng*
Beretta M93R	3	2	Nil	1	20	5	7	12
stock	3	2	Nil	2	20	3	6	20

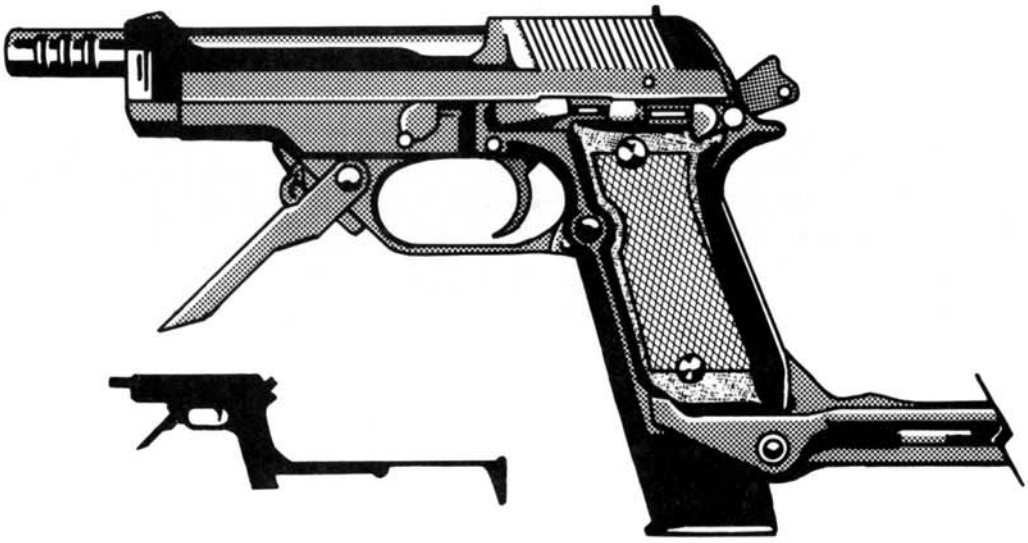

Bushmaster

Bushmaster (Submachinegun): A not-altogether-successful attempt to develop a 5.56mm N submachinegun. The weapon's main problem is that the powder charge does not completely consume itself before the round leaves the barrel, making the muzzle flash extremely distracting. Also, its ambidextrous, nontraditional design makes it clumsy to inexperienced users.

Ammo: 5.56mm N
Wt: 2.8 kg
Mag: 20 box or 40 box
Price: $450 (R/—)

						—Recoil—		
Weapon	*ROF*	*Dam*	*Pen*	*Blk*	*Mag*	*SS*	*Brst*	*Rng*
Bushmaster	5	3	1-Nil	3	20/40	4	10	30

M177

M177 (Submachinegun): The M177 is a shortened carbine version of the M16 assault rifle. It cannot be fitted with the M203 GL, but it can use rifle grenades.

Ammo: 5.56mm N
Wt: 2.5 kg
Mag: 20 box or 30 box
Price: $750 (S/R)

						—Recoil—		
Weapon	*ROF*	*Dam*	*Pen*	*Blk*	*Mag*	*SS*	*Brst*	*Rng*
M177	5	3	1-Nil	3/4	20/30	3	8	40

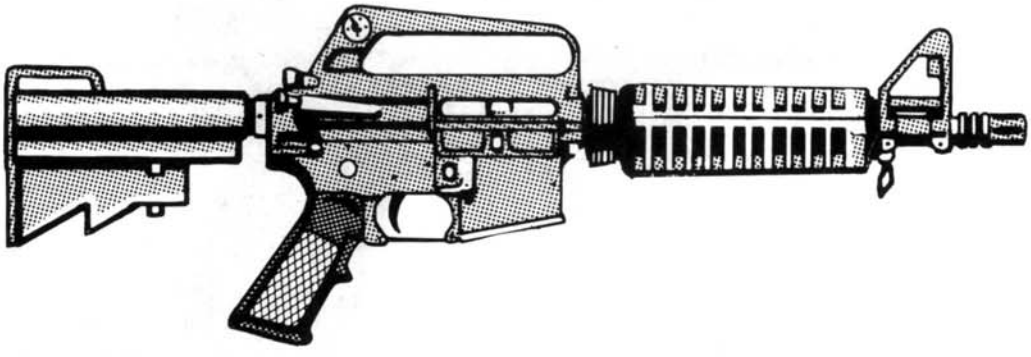

Colt 9mm SMG

Colt 9mm SMG (Submachinegun): This is a version of the M177 chambered for the 9mm P pistol round. It was manufactured by Colt in hopes of a sale to the US Army. The weapon was never adopted by the US, but is used by other armies and police forces worldwide.

Ammo: 9mm P
Wt: 3.2 kg
Mag: 20 box or 30 box
Price: $850 (S/R)

						—Recoil—		
Weapon	*ROF*	*Dam*	*Pen*	*Blk*	*Mag*	*SS*	*Brst*	*Rng*
9mm SMG	5	2	Nil	3/4	20/30	2	6	30

Colt Scamp

Colt Scamp (Submachinegun): The Colt Scamp was an experiment in submachinegun design that was not widely accepted because of its small caliber and odd cartridge (designed especially for this weapon). It has no stock and has a three-round burst limiter, meaning that the magazine cannot be emptied in one long burst.

Ammo: .22 SC
Wt: 1.5 kg
Mag: 27 box
Price: $750 (R/—)

						—Recoil—		
Weapon	*ROF*	*Dam*	*Pen*	*Blk*	*Mag*	*SS*	*Brst*	*Rng*
Colt Scamp	3	2	1-Nil	1	27	4	7	12

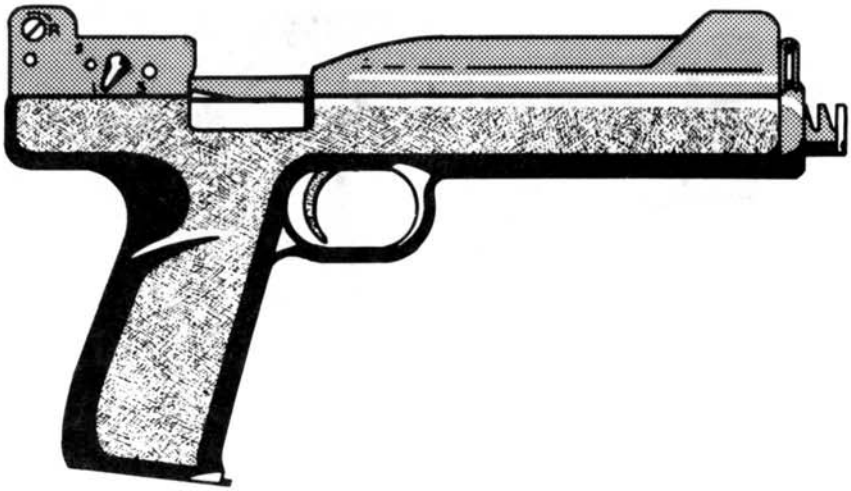

F1A1

F1A1 (Submachinegun): This is an Australian-built WWII-vintage Australian submachinegun. Its main distinguishing feature is a top-mounted magazine.

Ammo: 9mm P
Wt: 4 kg
Mag: 32 box
Price: $750 (R/—)

						—Recoil—		
Weapon	*ROF*	*Dam*	*Pen*	*Blk*	*Mag*	*SS*	*Brst*	*Rng*
F1A1	5	2	Nil	4	32	2	4	30

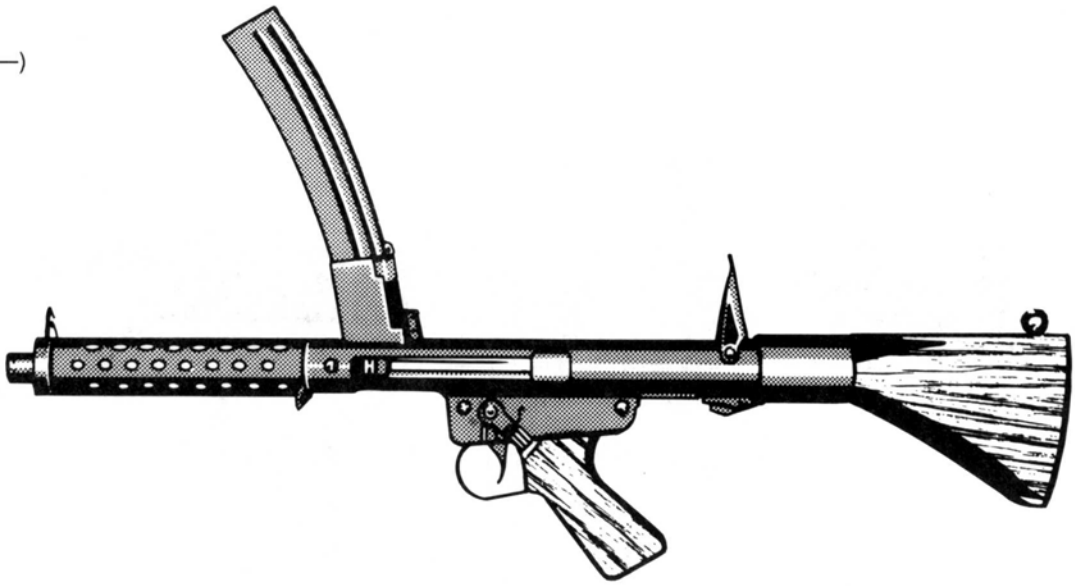

HM-3

HM-3 (Submachinegun): The standard submachine of the Mexican Army and police.

Ammo: 9mm P
Wt: 3.6 kg
Mag: 32 box
Price: $750 (C/S)

						—Recoil—		
Weapon	*ROF*	*Dam*	*Pen*	*Blk*	*Mag*	*SS*	*Brst*	*Rng*
HM-3	5	2	Nil	2/3	32	2	5	30

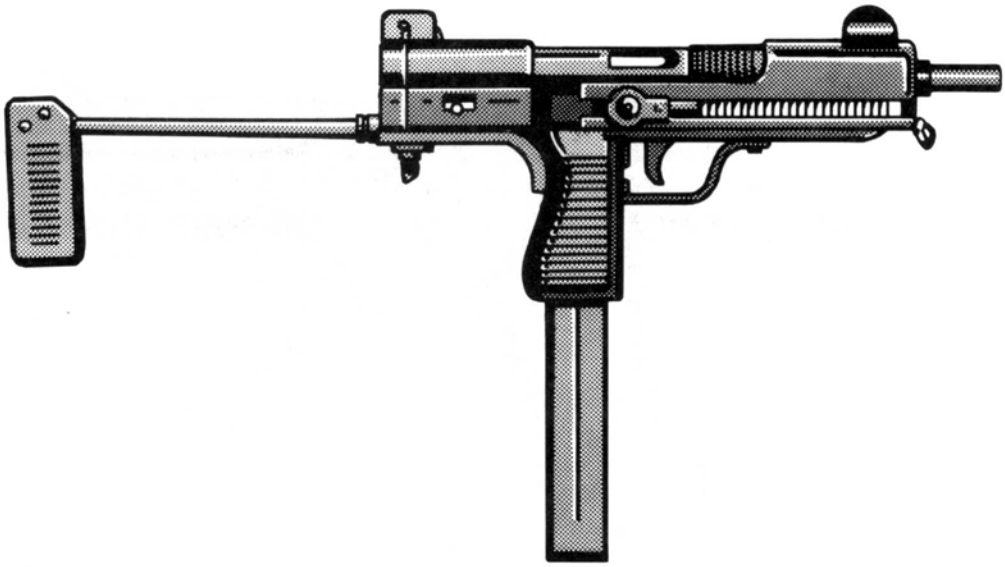

Ingram M10 9mm

Ingram M10 9mm (Submachinegun): The Ingram was designed especially for clandestine work and has acquired a large body of enthusiasts (and detractors). The barrel is threaded to take a specially designed suppressor.

Ammo: 9mm P
Wt: 3.5 kg
Mag: 32 box
Price: $350 (C/S)

						—Recoil—		
Weapon	*ROF*	*Dam*	*Pen*	*Blk*	*Mag*	*SS*	*Brst*	*Rng*
M10 9mm	10	2	Nil	1/3	32	2	9	20

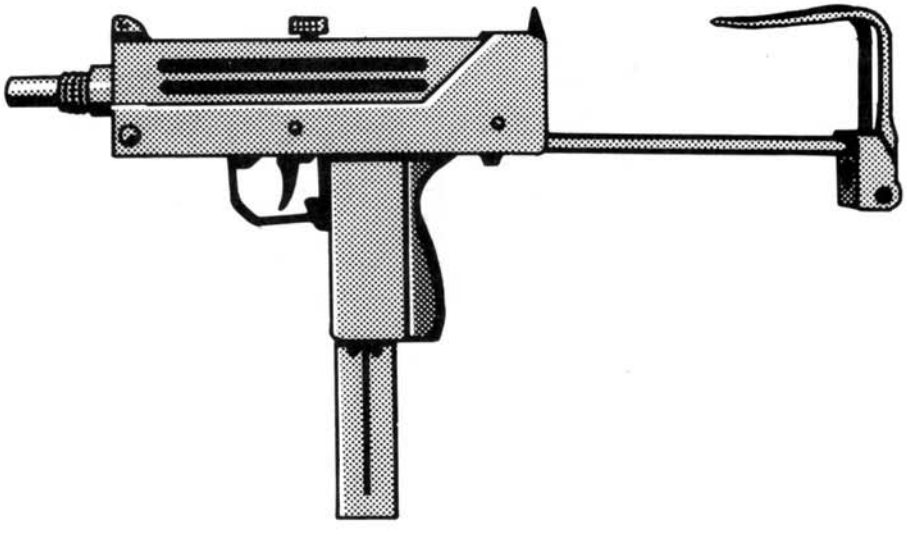

Ingram M10 .45

Ingram M10 .45 (Submachinegun): This model is chambered for .45 ACP and is somewhat less controllable in fully automatic fire than the other models.

Ammo: .45 ACP
Wt: 3.8 kg
Mag: 30 box
Price: $450 (R/R)

						—Recoil—		
Weapon	*ROF*	*Dam*	*Pen*	*Blk*	*Mag*	*SS*	*Brst*	*Rng*
M10 .45	10	2	Nil	1/3	30	2	10	20

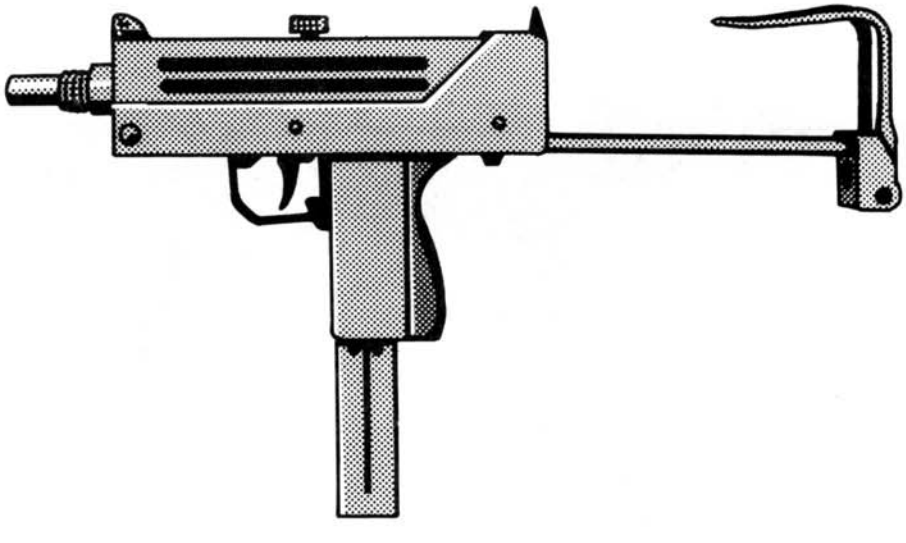

Ingram M11

Ingram M11 (Submachinegun): The .380 ACP version of the Ingram series. This Ingram SMG is the most concealable and is the least controllable.

Ammo: .380 ACP
Wt: 2 kg
Mag: 16 box or 32 box
Price: $400 (R/R)

						—Recoil—		
Weapon	*ROF*	*Dam*	*Pen*	*Blk*	*Mag*	*SS*	*Brst*	*Rng*
Ingram M11	10	1	Nil	1/2	16/32	2	11	20

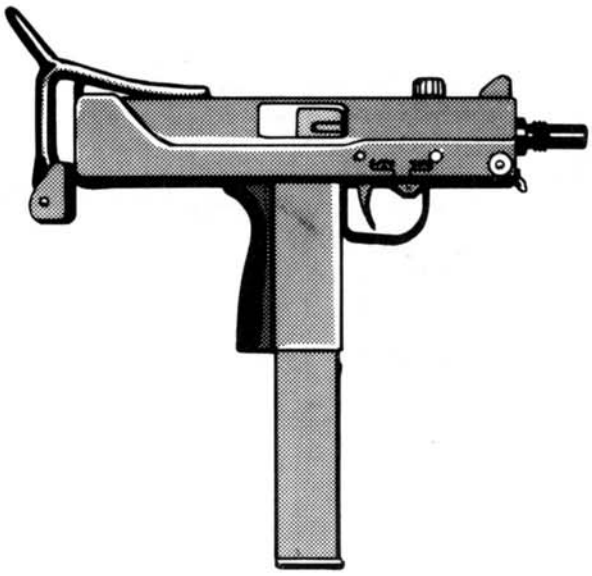

K-50

K-50 (Submachinegun): This weapon is a Vietnamese submachinegun. It is basically a modified Chinese SMG built in North Vietnam in large numbers.

Ammo: 7.62mm T
Wt: 4 kg
Mag: 35 box
Price: $450 (R/S)

						—Recoil—		
Weapon	*ROF*	*Dam*	*Pen*	*Blk*	*Mag*	*SS*	*Brst*	*Rng*
K-50	5	2	1-Nil	3/4	35	2	5	30

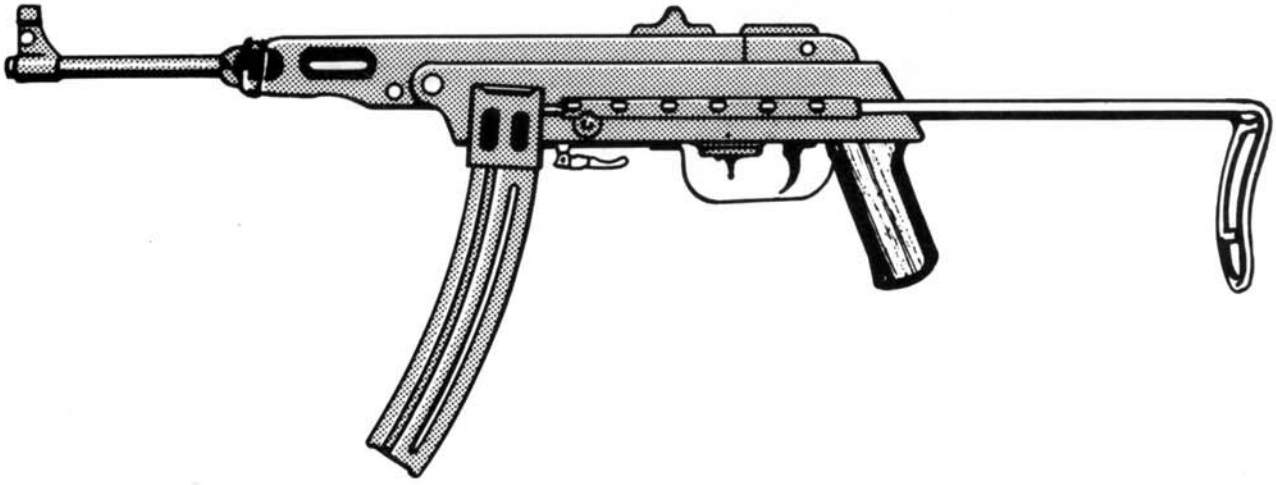

L2A3 Sterling

L2A3 Sterling (Submachinegun): The standard military submachinegun of the British Army, the Sterling has also found its way into general use by other armies and some police and government agencies.

Ammo: 9mm P
Wt: 3.5 kg
Mag: 34 box
Price: $600 (C/S)

						—Recoil—		
Weapon	*ROF*	*Dam*	*Pen*	*Blk*	*Mag*	*SS*	*Brst*	*Rng*
L2A3 Sterling	5	2	Nil	2/3	34	2	5	30

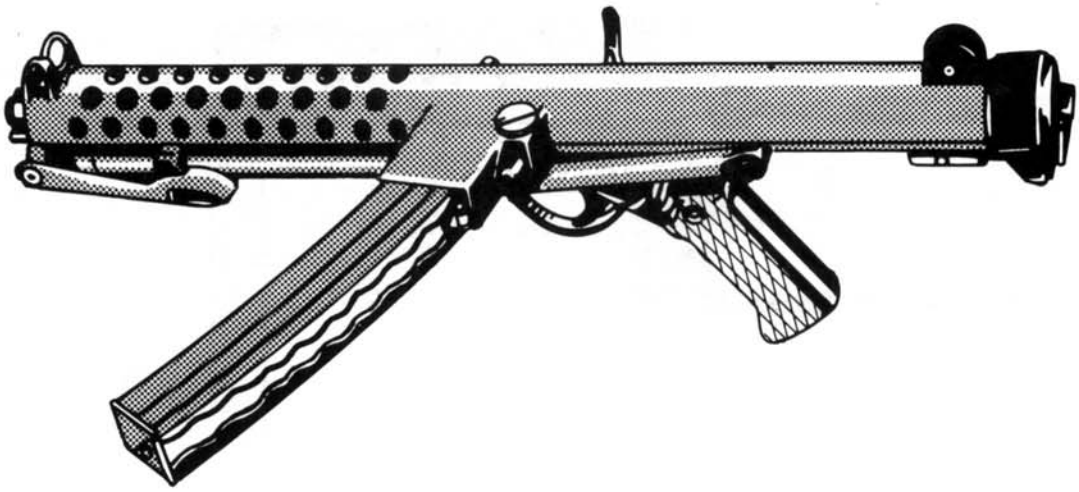

L34A1 Sterling

L34A1 Sterling (Submachinegun): This version of the British Sterling SMG features a built-in suppressor.

Ammo: 9mm P
Wt: 4.3 kg
Mag: 34 box
Price: $850 (R/—)

						—Recoil—		
Weapon	*ROF*	*Dam*	*Pen*	*Blk*	*Mag*	*SS*	*Brst*	*Rng*
L34A1 Sterling	5	2	Nil	3/4	34	1	4	30

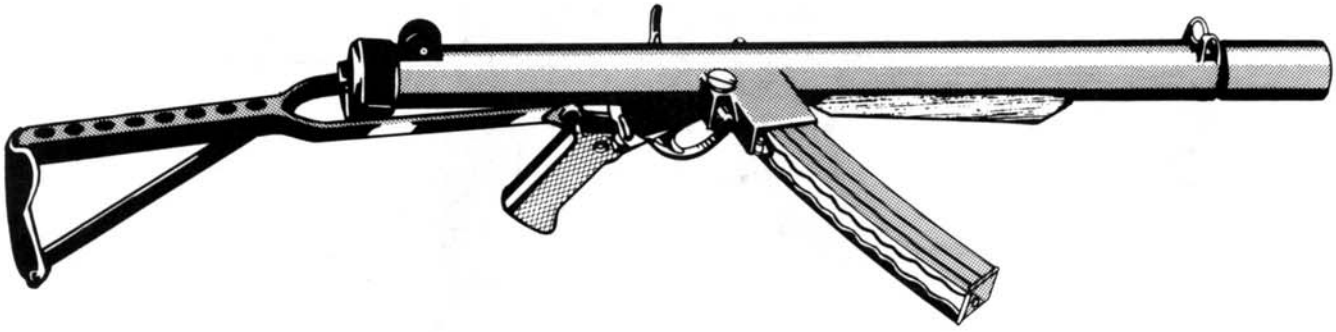

M-45 Carl Gustav

M-45 Carl Gustav (Submachinegun): A Swedish 9mm submachinegun, named (as the Swedes seem to name all their weapons) the Carl Gustav. It is in very widespread use.

Ammo: 9mm P
Wt: 4.2 kg
Mag: 36 box or 50 box
Price: $400 (C/S)

						—Recoil—		
Weapon	*ROF*	*Dam*	*Pen*	*Blk*	*Mag*	*SS*	*Brst*	*Rng*
M-45	5	2	Nil	3/4	36/50	2	4	30

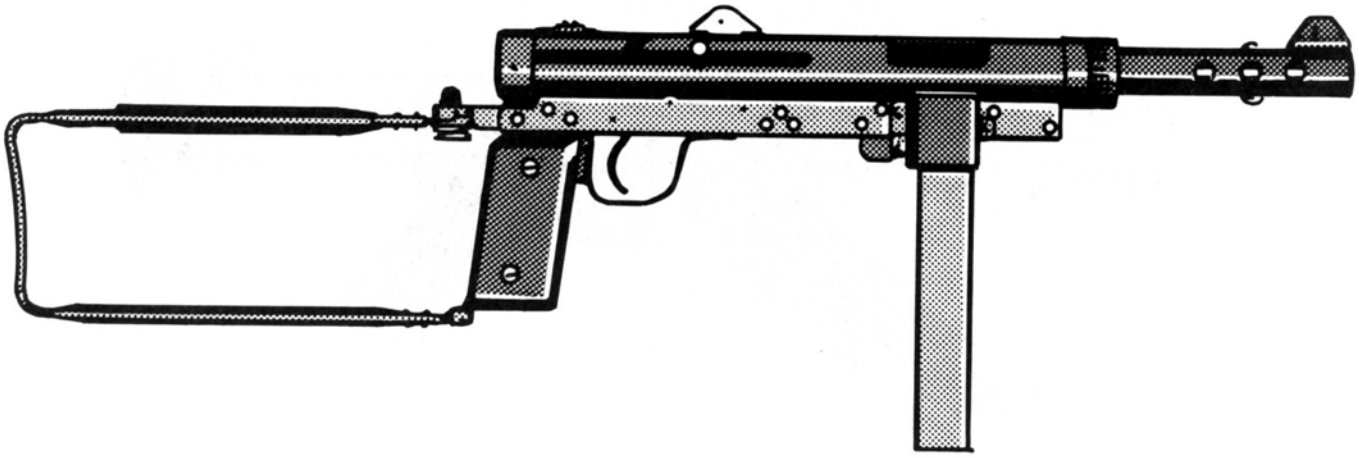

M3A1

M3A1 (Submachinegun): Called the "grease gun" because of its fancied resemblance to an automotive maintenance tool, this weapon is no longer in US Army service, but it is used by a number of other armies and some police forces throughout the world.

Ammo: .45 ACP
Wt: 4.5 kg
Mag: 30 box
Price: $300 (S/R)

						—Recoil—		
Weapon	*ROF*	*Dam*	*Pen*	*Blk*	*Mag*	*SS*	*Brst*	*Rng*
M3A1	5	2	Nil	3/4	30	2	4	30

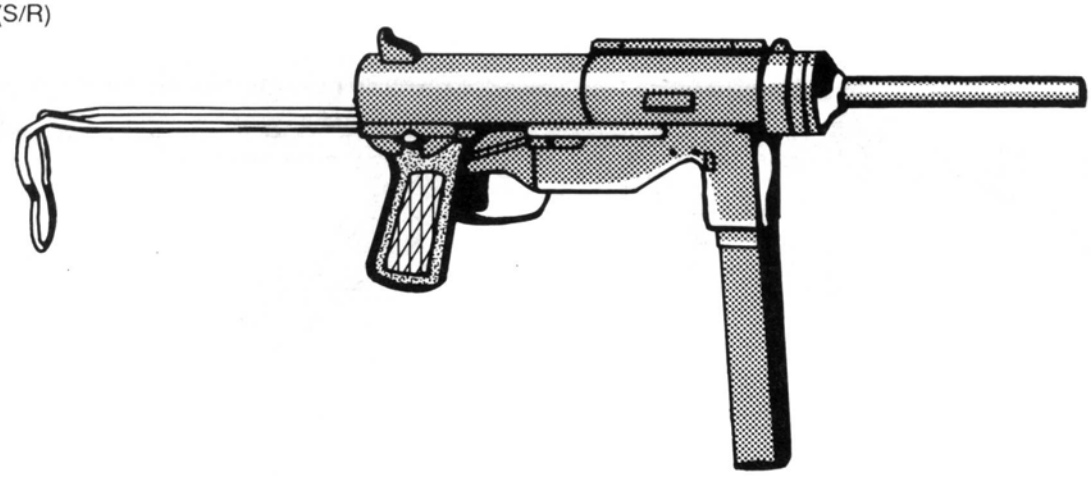

M231

M231 (Submachinegun): The standard firing-port weapon on the M2 Bradley, the M231 is a satisfactory vehicle weapon for suppressive fire but a mediocre submachinegun. It cannot be fitted with the M203 40mm GL.

Ammo: 5.56mm N
Wt: 3 kg
Mag: 20 box or 30 box
Price: $300 (V/C)

						—Recoil—		
Weapon	*ROF*	*Dam*	*Pen*	*Blk*	*Mag*	*SS*	*Brst*	*Rng*
M231	5	2	1-Nil	3/4	20/30	1	4	25

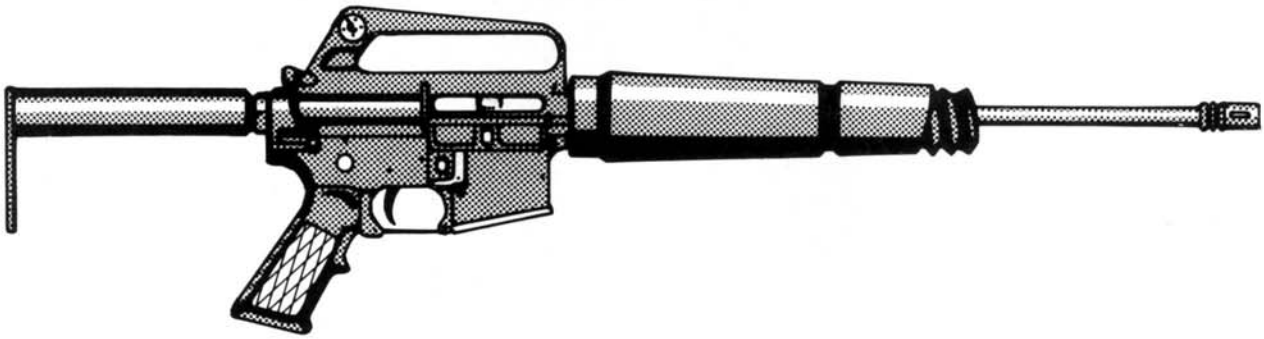

Madson M50

Madson M50 (Submachinegun): The Madson is a Danish SMG sold primarily in Latin America. The weapon is fitted with a safety interlock that prohibits it from being fired with one hand.

Ammo: 9mm P
Wt: 3.5 kg
Mag: 32 box
Price: $450 (C/S)

						—Recoil—		
Weapon	*ROF*	*Dam*	*Pen*	*Blk*	*Mag*	*SS*	*Brst*	*Rng*
Madson M50	5	2	Nil	3/4	32	2	5	30

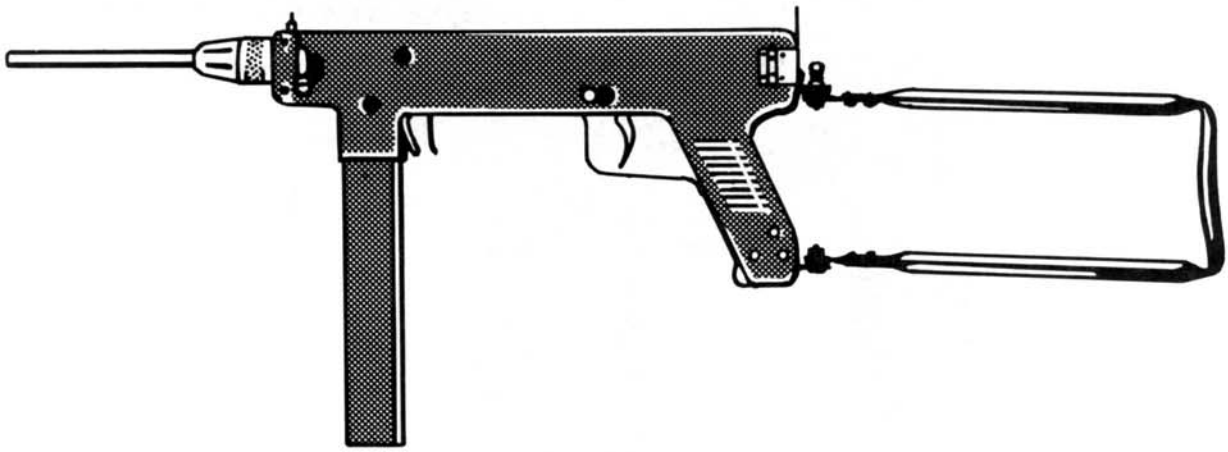

MAT-49

MAT-49 (Submachinegun): The French standard military and police submachinegun.

Ammo: 9mm P
Wt: 4.8 kg
Mag: 32 box
Price: $300 (S/R)

						—Recoil—		
Weapon	*ROF*	*Dam*	*Pen*	*Blk*	*Mag*	*SS*	*Brst*	*Rng*
MAT-49	5	2	Nil	3/4	32	1	4	30

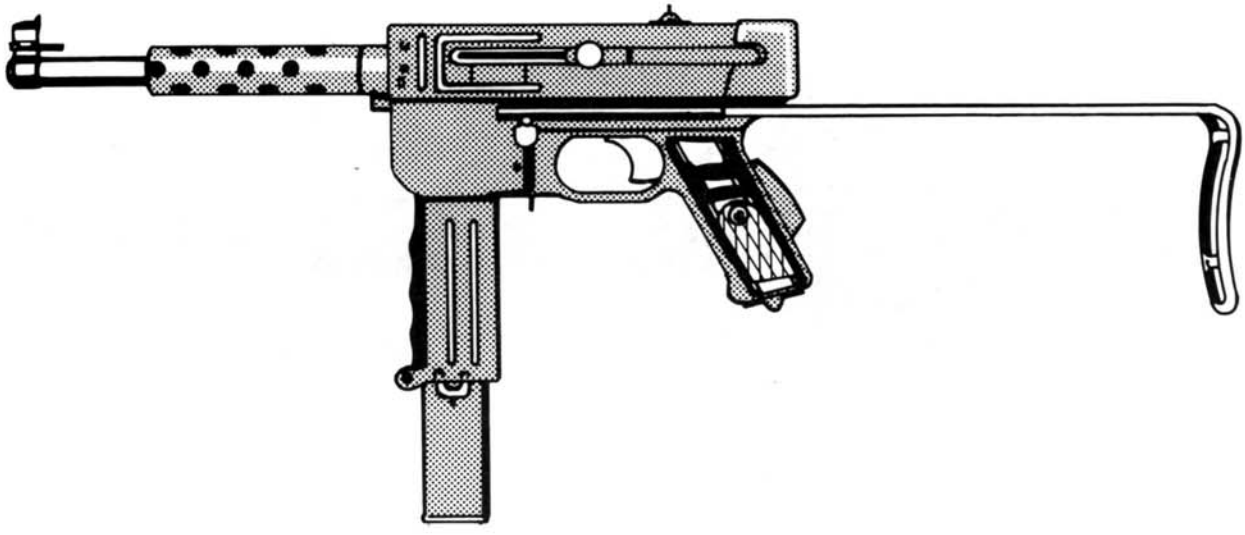

Mauser M32 (M712)

Mauser M32 (Submachinegun): The Mauser M32 (aka M712) is a fully automatic version of the Mauser M1896 Broomhandle, developed in the 1930s in Germany.

Ammo: 7.62mm T
Wt: 1.8 kg
Mag: 10 box or 20 box
Price: $825 (S/R)

						—Recoil—		
Weapon	*ROF*	*Dam*	*Pen*	*Blk*	*Mag*	*SS*	*Brst*	*Rng*
M32/M712	5	2	Nil	1	10/20	4	9	12
stock	5	2	Nil	3	10/20	2	5	20

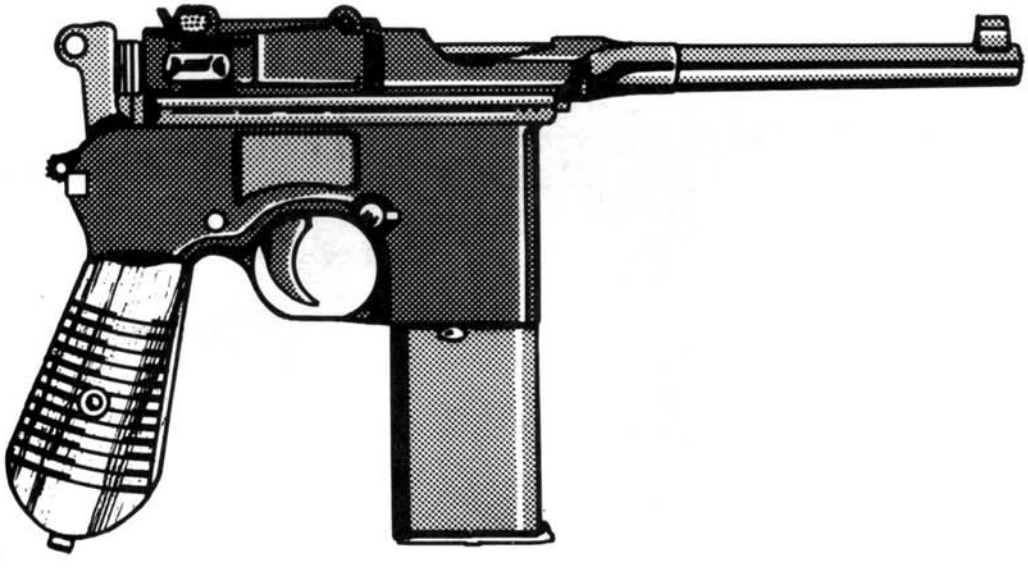

Mini-Uzi

Mini-Uzi (Submachinegun): A compact version of the Uzi 9mm SMG, favored by vehicle and air crewmembers. Magazines and some parts are interchangeable with the regular Uzi.

Ammo: 9mm P
Wt: 3 kg
Mag: 20 box or 30 box
Price: $600 (C/S)

						—Recoil—		
Weapon	*ROF*	*Dam*	*Pen*	*Blk*	*Mag*	*SS*	*Brst*	*Rng*
Mini-Uzi	10	2	Nil	1/3	20/30	2	10	30

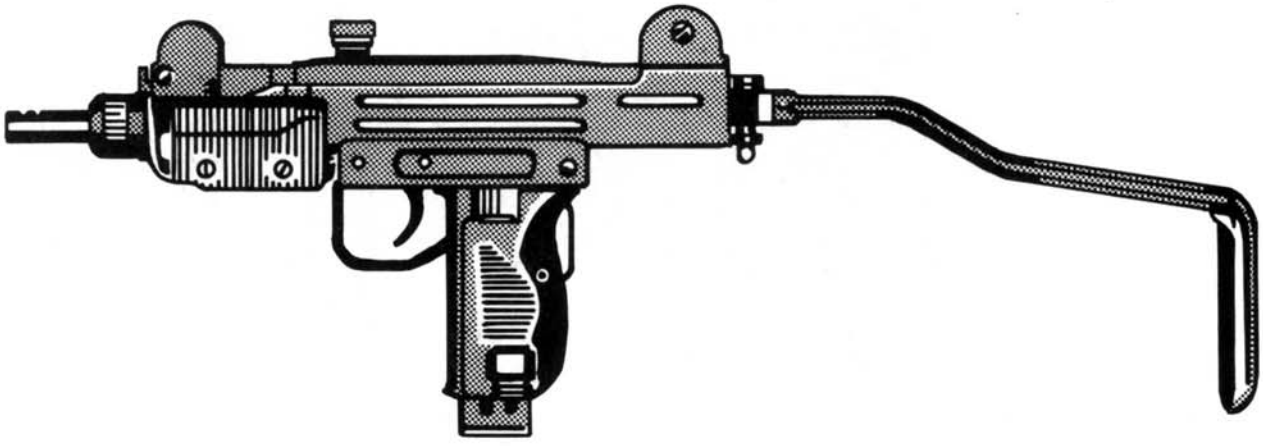

MP-5A2

MP-5A2 (Submachinegun): The standard submachinegun of German territorial troops and police.

Ammo: 9mm P
Wt: 3 kg
Mag: 15 box or 30 box
Price: $400 (C/S)

						—Recoil—		
Weapon	*ROF*	*Dam*	*Pen*	*Blk*	*Mag*	*SS*	*Brst*	*Rng*
MP5A2	5	2	Nil	4	15/30	2	6	30

MP-5K

MP-5K (Submachinegun): The MP-5K (*Kurz* or short) is an extremely compact version of the MP-5 submachinegun. It has a vertical front grip and no stock.

Ammo: 9mm P
Wt: 2.3 kg
Mag: 15 box or 30 box
Price: $450 (S/R)

						—Recoil—		
Weapon	*ROF*	*Dam*	*Pen*	*Blk*	*Mag*	*SS*	*Brst*	*Rng*
MP-5K	5	2	Nil	3	15/30	3	8	12

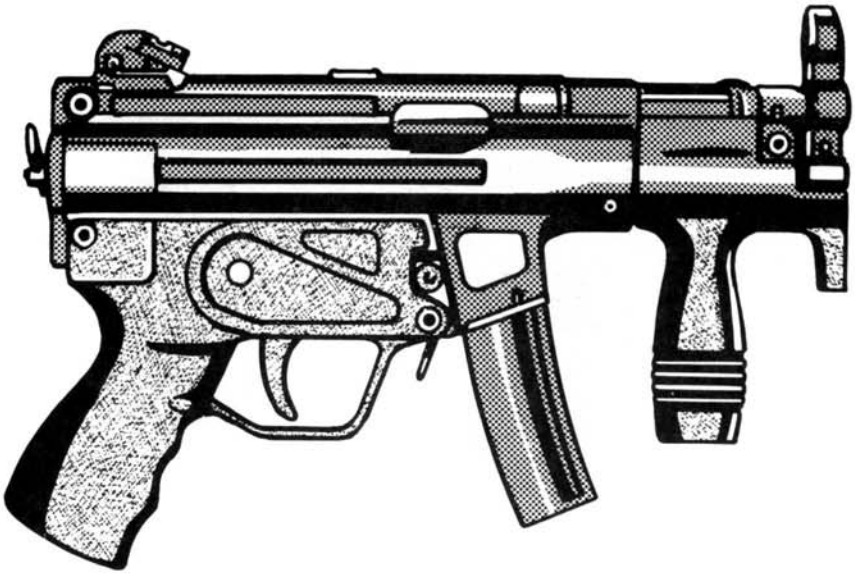

MP-5SD3

MP-5SD3 (Submachinegun): A version of the MP-5, manufactured with an integral suppressor and a collapsible shoulder stock.

Ammo: 9mm P
Wt: 2.5 kg
Mag: 15 box or 30 box
Price: $1200 (S/R)

						—Recoil—		
Weapon	*ROF*	*Dam*	*Pen*	*Blk*	*Mag*	*SS*	*Brst*	*Rng*
MP-5SD3	5	2	Nil	3/4	15/30	2	5	30

MP18-1

MP18-1 (Submachinegun): This is a German submachinegun developed in the 1930s to use the 32-round drum from the artillery Luger. It is extremely rare.

Ammo: 9mm P
Wt: 5.3 kg
Mag: 32 drum
Price: $900 (—/—)

						—Recoil—		
Weapon	*ROF*	*Dam*	*Pen*	*Blk*	*Mag*	*SS*	*Brst*	*Rng*
MP18-1	5	2	Nil	4	32	1	3	30

MP-40

MP-40 (Submachinegun): A German WWII submachinegun, called the Schmeisser by the Germans or the burp-gun by the Americans.

Ammo: 9mm P
Wt: 4.7 kg
Mag: 32 box
Price: $1200 (R/R)

						—Recoil—		
Weapon	*ROF*	*Dam*	*Pen*	*Blk*	*Mag*	*SS*	*Brst*	*Rng*
MP-40	5	2	Nil	3/4	32	1	4	30

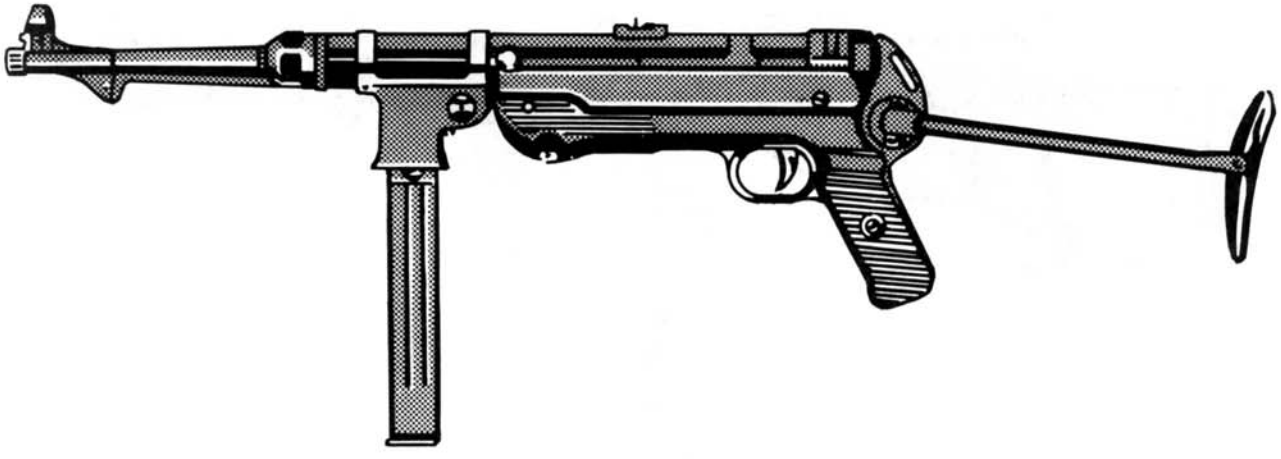

MPi-69

MPi-69 (Submachinegun): This Austrian submachinegun is unique in that the front sling swivel is also the weapon's cocking knob.

Ammo: 9mm P
Wt: 3.6 kg
Mag: 25 box or 32 box
Price: $450 (S/R)

						—Recoil—		
Weapon	*ROF*	*Dam*	*Pen*	*Blk*	*Mag*	*SS*	*Brst*	*Rng*
MPi-69	5	2	Nil	2/3	25/32	2	5	30

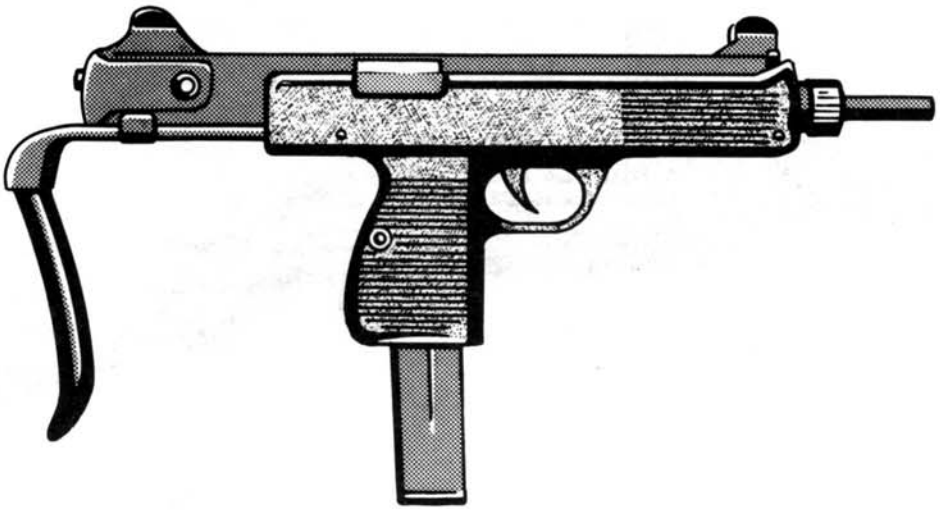

OSS M3

OSS M3 (Submachinegun): This weapon was developed by the American OSS (the Organization of Strategic Services, forerunner of the CIA) for use by operatives during WWII. It is essentially an M3 grease gun SMG with an integral suppressor.

Ammo: .45 ACP
Wt: 5.3 kg
Mag: 30 box
Price: $800 (R/—)

						—Recoil—		
Weapon	*ROF*	*Dam*	*Pen*	*Blk*	*Mag*	*SS*	*Brst*	*Rng*
OSS M3	5	2	Nil	4/5	30	1	3	20

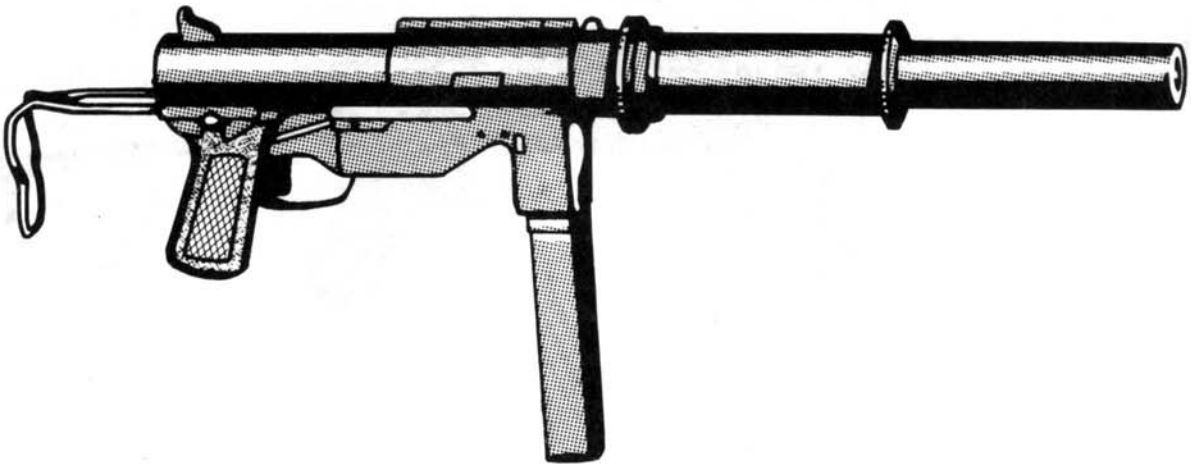

Owen Mk I

Owen Mk I (Submachinegun): The Owen was another Australian-built, WWII-vintage submachinegun, which was replaced by the F1A1. Its main distinguishing feature is a top-mounted magazine.

Ammo: 9mm P
Wt: 5 kg
Mag: 33 box
Price: $650 (R/—)

						—Recoil—		
Weapon	*ROF*	*Dam*	*Pen*	*Blk*	*Mag*	*SS*	*Brst*	*Rng*
Owen Mk I	5	2	Nil	4	33	1	3	30

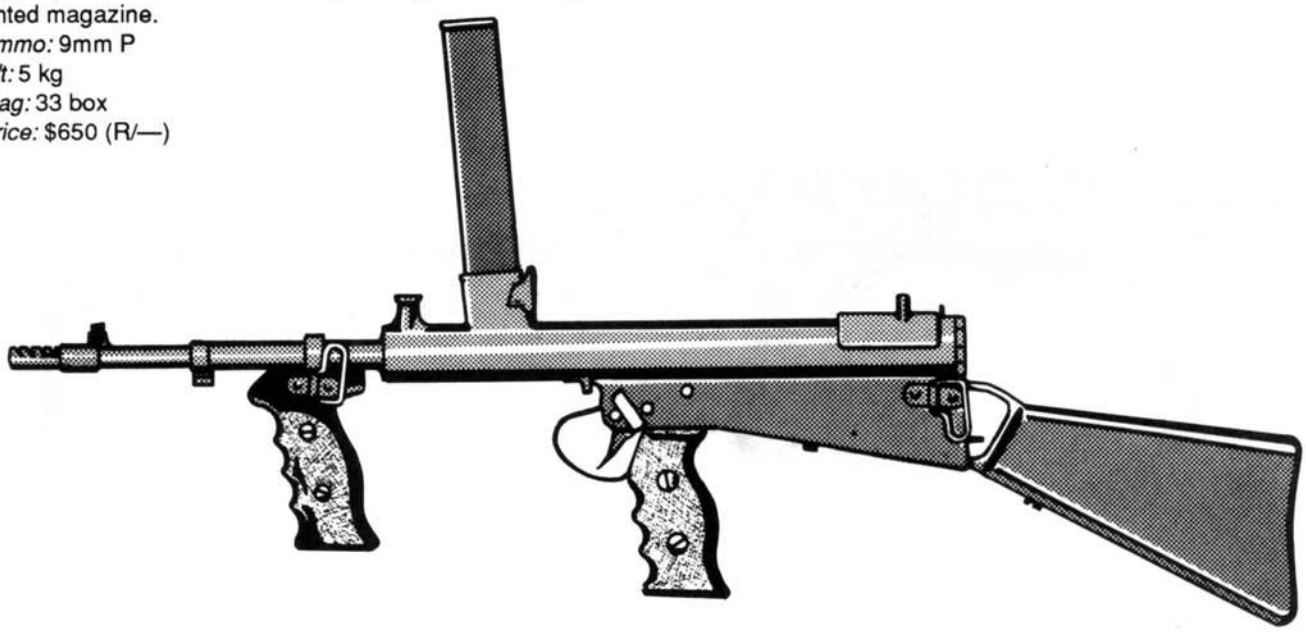

PM-9

PM-9 (Submachinegun): The PM-9 is a very odd-looking French submachinegun, using a unique flywheel action receiver.

Ammo: 9mm P
Wt: 3.2 kg
Mag: 32 box
Price: $550 (S/R)

						—Recoil—		
Weapon	*ROF*	*Dam*	*Pen*	*Blk*	*Mag*	*SS*	*Brst*	*Rng*
PM-9	5	2	Nil	2/3	32	2	5	20

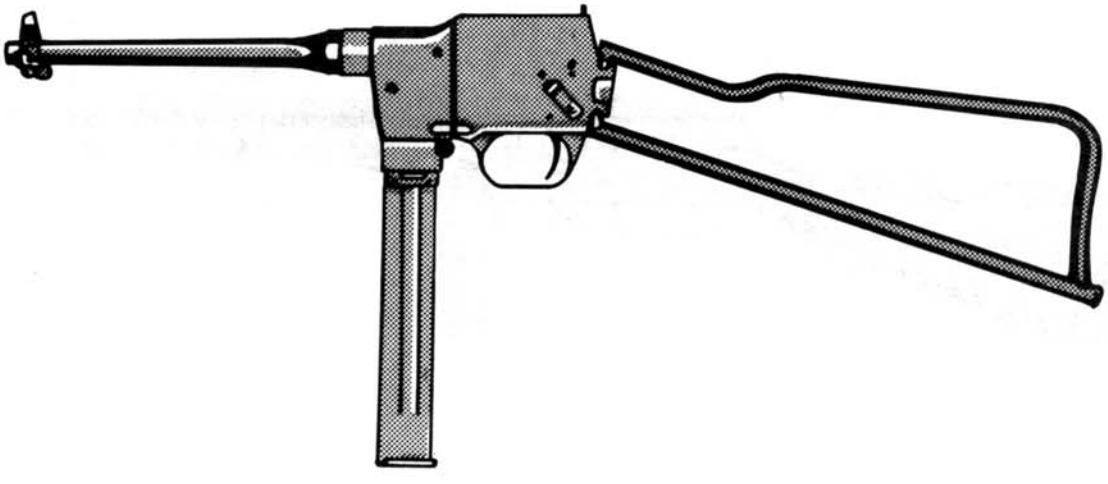

PM-63

PM-63 (Submachinegun): This is a Polish submachinegun with a folding stock (which doubles as a handgrip when folded) and a progressive trigger.

Ammo: 9mm M
Wt: 1.8 kg
Mag: 15 box or 40 box
Price: $350 (R/S)

						—Recoil—		
Weapon	*ROF*	*Dam*	*Pen*	*Blk*	*Mag*	*SS*	*Brst*	*Rng*
PM-63	5	1	Nil	1	15/40	3	8	12
stock	5	1	Nil	3	15/40	2	3	20

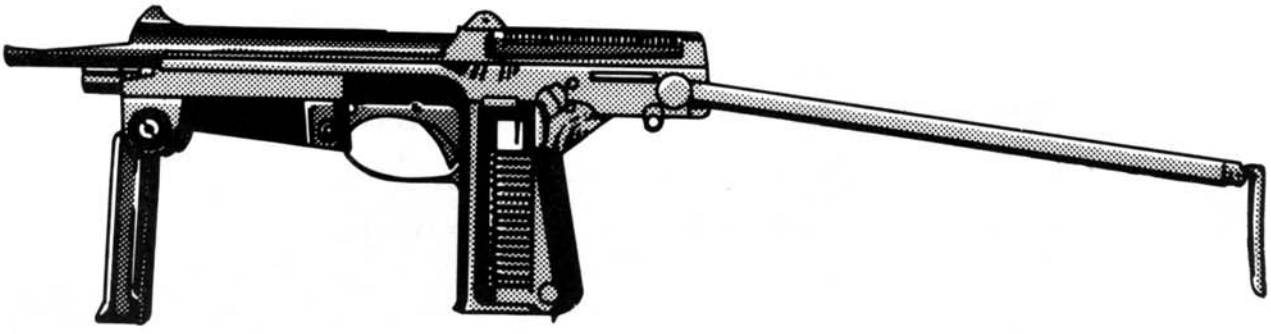

PPSh-41

PPSh-41 (Submachinegun): A WWII-vintage Soviet submachinegun, still used by some nations.

Ammo: 7.62mm T
Wt: 5.3 kg
Mag: 35 box or 71 drum
Price: $300 (—/S)

						—Recoil—		
Weapon	*ROF*	*Dam*	*Pen*	*Blk*	*Mag*	*SS*	*Brst*	*Rng*
PPSh-41	5	2	1-Nil	4	35/71	1	4	30

PPSh-43

PPSh-43 (Submachinegun): A later version of the PPSh submachineguns, the PPSh-43 was produced in great numbers and distributed widely after WWII.

Ammo: 7.62mm T
Wt: 3.9 kg
Mag: 32 box
Price: $300 (R/C)

						—Recoil—		
Weapon	*ROF*	*Dam*	*Pen*	*Blk*	*Mag*	*SS*	*Brst*	*Rng*
PPSh-43	5	2	1-Nil	3/4	32	1	4	30

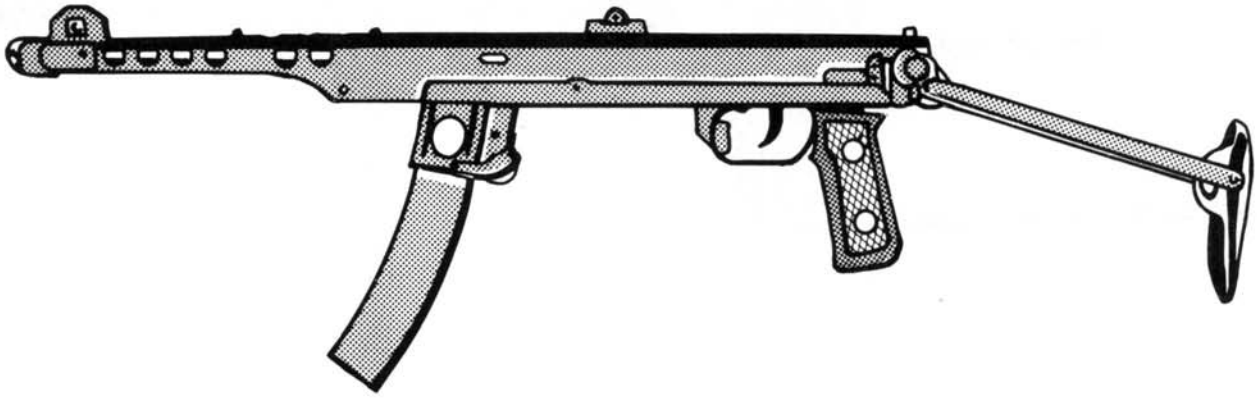

Rexim F.V. Mk 4

Rexim F.V. Mk 4 (Submachinegun): A Swiss-built submachinegun intended for domestic use and for export. It is highly regarded, but uncommon.

Ammo: 9mm P
Wt: 4.7 kg
Mag: 32 box
Price: $650 (S/—)

						—Recoil—		
Weapon	*ROF*	*Dam*	*Pen*	*Blk*	*Mag*	*SS*	*Brst*	*Rng*
Rexim F.V. Mk 4	5	2	Nil	3/4	32	2	4	30

S&W M76

S&W M76 (Submachinegun): The S&W M76 is an American submachinegun produced for export and police use.

Ammo: 9mm P
Wt: 4 kg
Mag: 36 box
Price: $800 (S/—)

						—Recoil—		
Weapon	*ROF*	*Dam*	*Pen*	*Blk*	*Mag*	*SS*	*Brst*	*Rng*
S&W M76	5	2	Nil	3/4	36	2	4	30

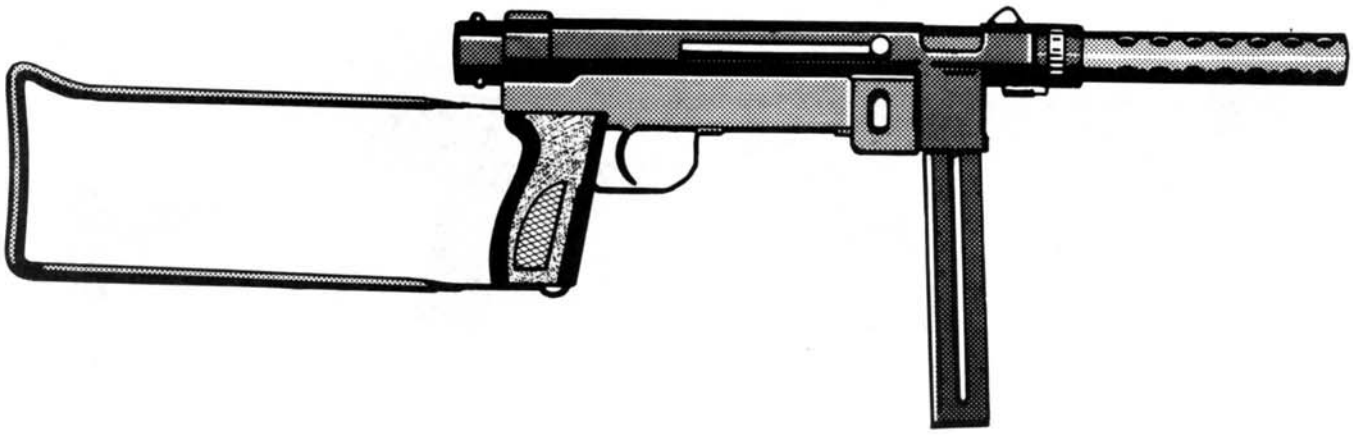

Sidewinder SS-1

Sidewinder SS-1 (Submachinegun): A domestic American SMG intended for police and export use.

Ammo: 9mm P
Wt: 3.2 kg
Mag: 32 box or 45 box
Price: $750 (S/—)

						—Recoil—		
Weapon	*ROF*	*Dam*	*Pen*	*Blk*	*Mag*	*SS*	*Brst*	*Rng*
SS-1	5	2	Nil	2/3	32/45	2	5	30

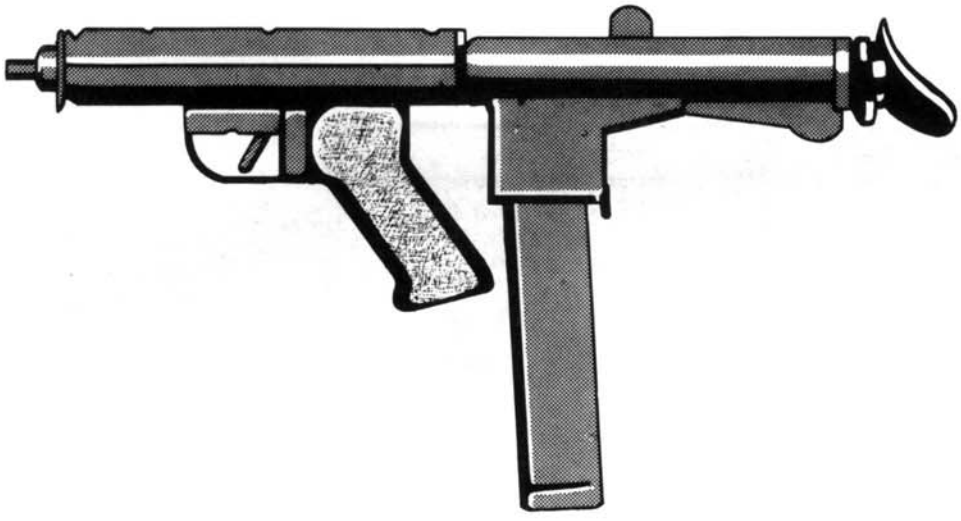

Stechkin

Stechkin (Submachinegun): The Stechkin is a fully automatic pistol used by Warsaw Pact undercover agents because of its small size. The stock is a necessity for controlled fire.

Ammo: 9mm M
Wt: 1.8 kg
Mag: 20 box
Price: $750 (R/S)

						—Recoil—		
Weapon	*ROF*	*Dam*	*Pen*	*Blk*	*Mag*	*SS*	*Brst*	*Rng*
Stechkin	5	1	Nil	1	20	5	13	12
stock	5	1	Nil	3	20	3	8	20

Sten Mk II

Sten Mk II (Submachinegun): The Sten is one of the most common submachineguns in the world, having been issued in large numbers during WWII. The British-built Sten was designed to be simple and easy to make, and thousands have been turned out.

Ammo: 9mm P
Wt: 3.4 kg
Mag: 32 box
Price: $450 (C/S)

						—Recoil—		
Weapon	*ROF*	*Dam*	*Pen*	*Blk*	*Mag*	*SS*	*Brst*	*Rng*
Sten Mk II	5	2	Nil	4	32	2	5	30

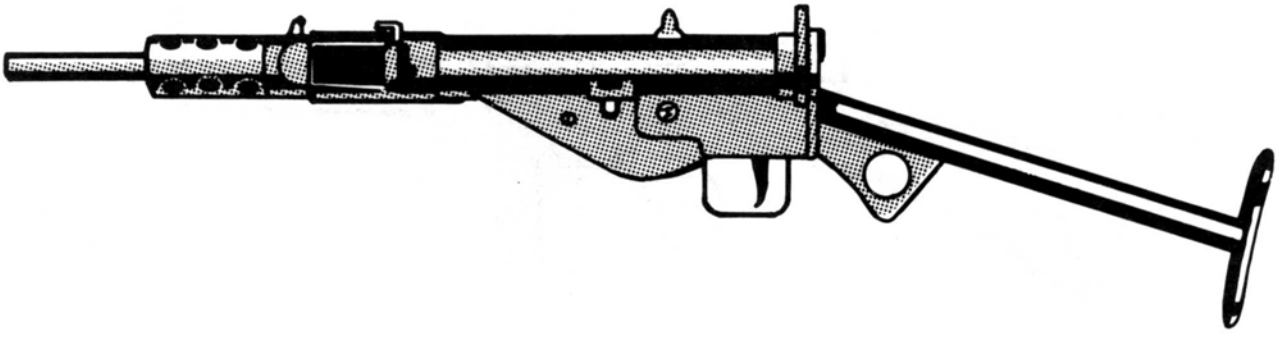

Sten Mk IIS

Sten Mk IIS (Submachinegun): This is a version of the Sten gun fitted with an integral suppressor.

Ammo: 9mm P
Wt: 3.4 kg
Mag: 32 box
Price: $750 (S/—)

						—Recoil—		
Weapon	*ROF*	*Dam*	*Pen*	*Blk*	*Mag*	*SS*	*Brst*	*Rng*
Sten Mk IIS	5	2	Nil	4	32	2	5	30

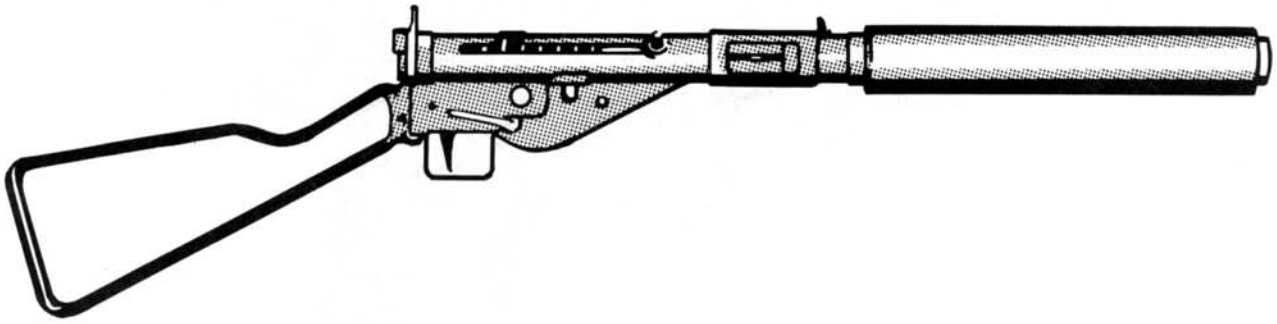

Thompson M1

Thompson M1 (Submachinegun): This is the improved WWII model of the famous Tommy gun.

Ammo: .45 ACP
Wt: 5.5 kg
Mag: 20 box or 30 box
Price: $1000 (S/R)

						—Recoil—		
Weapon	*ROF*	*Dam*	*Pen*	*Blk*	*Mag*	*SS*	*Brst*	*Rng*
Thompson M1	5	2	Nil	4	20/30	1	4	30

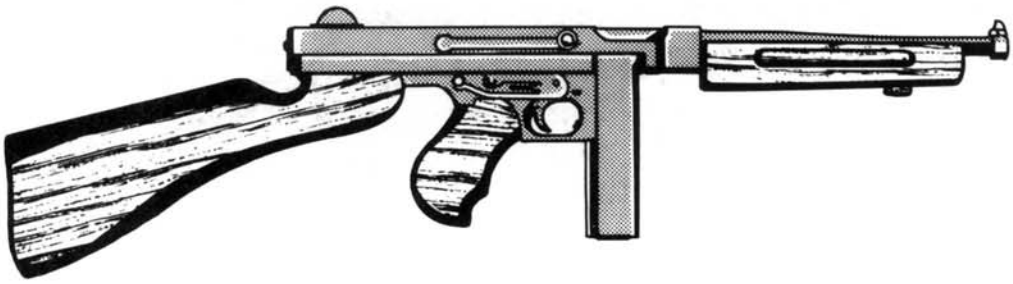

Thompson M1928

Thompson M1928 (Submachinegun): This is the gun that made the 1920s roar, and came to symbolize the American gangster of the era. It was used in practically all American gangster movies and came to be nicknamed the Tommy gun.

Ammo: .45 ACP
Wt: 7 kg
Mag: 20 box or 100 drum
Price: $1500 (R/—)

						—Recoil—		
Weapon	*ROF*	*Dam*	*Pen*	*Blk*	*Mag*	*SS*	*Brst*	*Rng*
M1928	5	2	Nil	5	20/100	1	3	30

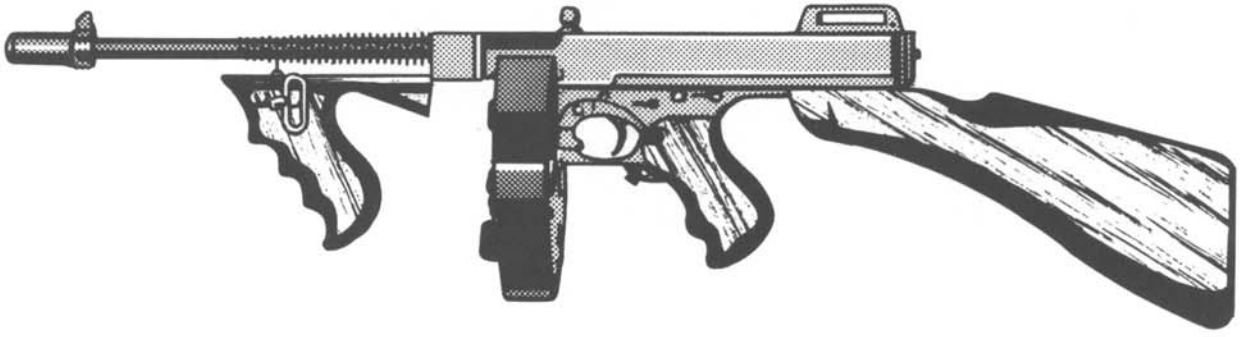

Type 64

Type 64 (Submachinegun): This weapon is a Chinese-built submachinegun with an integral suppressor. Although regular 7.62mm T rounds will function in the weapon, the suppressor does not work well unless special subsonic rounds are used (7.62mm T subsonic).

Ammo: 7.62mm T, 7.62mm T subsonic
Wt: 4 kg
Mag: 40 box
Price: $750 (—/S)

						—Recoil—		
Weapon	*ROF*	*Dam*	*Pen*	*Blk*	*Mag*	*SS*	*Brst*	*Rng*
Type 64	10	2	1-Nil	3/4	40	2	10	30
subsonic	10	1	1-Nil	3/4	40	1	4	20

Uzi

Uzi (Submachinegun): The Israeli-designed Uzi is the most common SMG. It is used by armies and police agencies worldwide, including the US Secret Service and US Federal Marshal Service.

Ammo: 9mm P
Wt: 4 kg
Mag: 25 box or 32 box
Price: $500 (V/C)

						—Recoil—		
Weapon	*ROF*	*Dam*	*Pen*	*Blk*	*Mag*	*SS*	*Brst*	*Rng*
Uzi	5	2	Nil	2/3	25/32	2	5	30

VP-70

VP-70 (Submachinegun): Manufactured by the German firm of Heckler and Koch, the VP-70 is a large-capacity, semiautomatic pistol with a singular feature—when the stock is attached, an interrupter is released and it is capable of fully automatic fire.

Ammo: 9mm P
Wt: 1.1 kg, stock adds 0.5 kg
Mag: 18 box
Price: $800 (S/R)

						—Recoil—		
Weapon	*ROF*	*Dam*	*Pen*	*Blk*	*Mag*	*SS*	*Brst*	*Rng*
VP-70	SA	2	Nil	1	18	6	—	12
stock	3	2	Nil	3	18	4	6	20

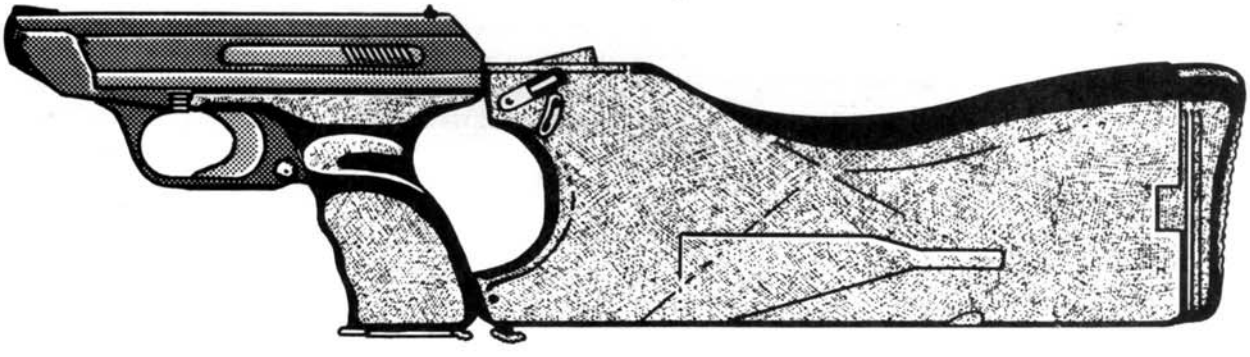

Vz-24

Vz-24 (Submachinegun): The standard Czech submachinegun, mostly found with militia and internal security forces.

Ammo: 7.62mm T
Wt: 4 kg
Mag: 32 box
Price: $300 (R/S)

						—Recoil—		
Weapon	*ROF*	*Dam*	*Pen*	*Blk*	*Mag*	*SS*	*Brst*	*Rng*
Vz-24	5	2	1-Nil	3	32	1	3	30

Vz-61/62 Skorpion

Vz-61/62 Skorpion (Submachinegun): Commonly referred to as a machinepistol, the Skorpion is small enough to carry in a shoulder holster. Its short range and underpowered ammunition make it of limited combat value, but its ease of concealment has made it very popular with Warsaw Pact covert agents. It is also frequently carried by Czech airborne forces, particularly by officers.

Ammo: .32 ACP
Wt: 1.6 kg
Mag: 10 box or 20 box
Price: $250 (R/S)

						—Recoil—		
Weapon	*ROF*	*Dam*	*Pen*	*Blk*	*Mag*	*SS*	*Brst*	*Rng*
Vz-61/62	5	1	Nil	1	10/20	3	7	4
stock	5	1	Nil	3	10/20	1	4	12

.50 Hawken

.50 Hawken (Sporting Rifle): A black-powder, muzzle-loading rifle, the Hawken is one of those "nostalgia" weapons manufactured in reproduction during the 1970s and 1980s. Similar weapons can be found in the hands of primitive peoples throughout the world.

Ammo: .50 caliber (powder and ball)
Wt: 4.1 kg
Mag: 1 individual (muzzleloader)
Price: $300 (S/R)

						—Recoil—		
Weapon	*ROF*	*Dam*	*Pen*	*Blk*	*Mag*	*SS*	*Brst*	*Rng*
.50 Hawken	SS	3	1-Nil	6	1i	3	—	16

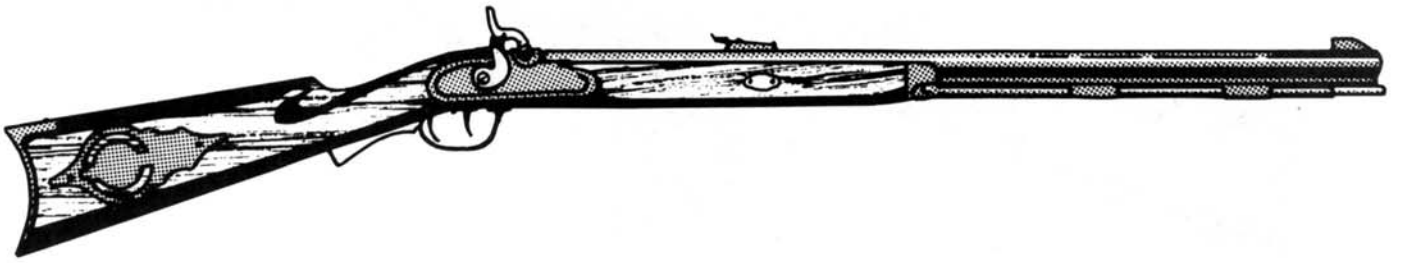

.69-Caliber Musket

.69-Caliber Musket (Sporting "Rifle"): Technically, this is not a rifle because its barrel is not rifled, but there is no classification for smoothbore in the **Twilight: 2000** game system. Smoothbore muskets (the one illustrated is a British Brown Bess) were distributed throughout the world, seeing action with irregular forces as late as WWII, and were often found in use by primitive peoples. Smoothbore muskets were also reproduced as "nostalgia weapons" in the late 20th century.

Ammo: .69 caliber (powder and ball)
Wt: 5.1 kg
Mag: 1 individual (muzzleloader)
Price: $200 (S/R)

						—Recoil—		
Weapon	*ROF*	*Dam*	*Pen*	*Blk*	*Mag*	*SS*	*Brst*	*Rng*
.69 caliber	SS	2	Nil	6	1i	1	—	10

.460 Weatherby

.460 Weatherby (Sporting Rifle): This is a large-caliber hunting rifle designed for big game and is one of the most powerful civilian weapons made.

Ammo: .460 Weatherby
Wt: 5 kg
Mag: 5 individual
Price: $750 (R/—)

						—Recoil—		
Weapon	*ROF*	*Dam*	*Pen*	*Blk*	*Mag*	*SS*	*Brst*	*Rng*
.460	BA	7	2-3-5	6	5i	8	—	75

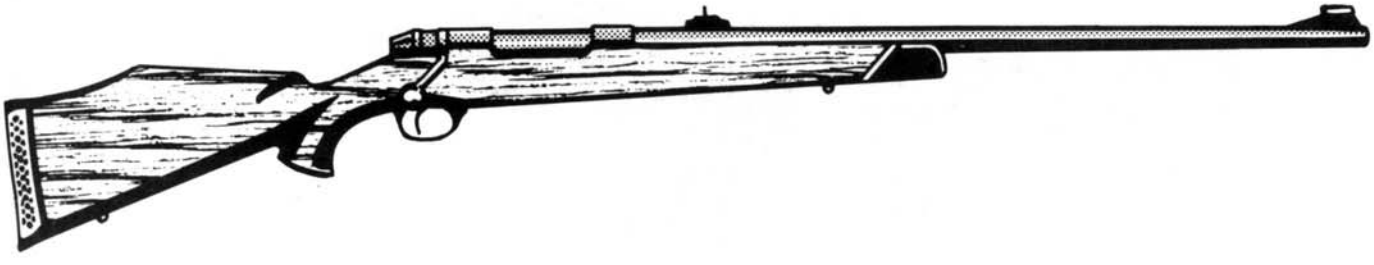

AK-47

AK-47 (Assault Rifle): The original Kalishnikov assault rifle manufactured from shortly after WWII until its replacement by the AKM and AK-74 in the 1970s. Thousands are still found worldwide.

Ammo: 7.62mm S
Wt: 5 kg
Mag: 30 box
Price: $150 (C/V)

						—Recoil—		
Weapon	*ROF*	*Dam*	*Pen*	*Blk*	*Mag*	*SS*	*Brst*	*Rng*
AK-47	5	3	2-Nil	5	30	3	7	50

AKM

AKM (Assault Rifle): The modern version of the ubiquitous AK-47. It is perhaps the most widely used military small arm in the world, and is very popular despite its underpowered and unstable cartridge. Replaced in front-line service by the AK-74, many AKMs were rechambered to fire 5.45 Bloc ammunition (designated AKMR for AKM rechambered). Thus, true AKMs are mostly found in use by militia units.

Ammo: 7.62mm S
Wt: 4 kg
Mag: 30 box
Price: $300 (C/V)

						—Recoil—		
Weapon	*ROF*	*Dam*	*Pen*	*Blk*	*Mag*	*SS*	*Brst*	*Rng*
AKM	5	3	2-Nil	5	30	3	8	50

AKMS

AKMS (Assault Rifle): This is a folding-stock version of the AKM assault rifle. It is favored by paratroopers and heliborne troops.

Ammo: 7.62mm S
Wt: 4 kg
Mag: 30 box
Price: $325 (S/C)

						—Recoil—		
Weapon	*ROF*	*Dam*	*Pen*	*Blk*	*Mag*	*SS*	*Brst*	*Rng*
AKMS	5	3	2-Nil	4/5	30	2	5	50

AKMR

AKMR (Assault Rifle): As the AK-74 supplanted the AKM in service, large numbers of AKMs were rechambered to fire the AK-74's 5.45 cartridge to enable standardization of supply without discarding mountains of AKMs. Widely used in Eastern Bloc military units alongside the AK-74.

Ammo: 5.45mm B
Wt: 4 kg
Mag: 30 box
Price: $300 (C/V)

						—Recoil—		
Weapon	*ROF*	*Dam*	*Pen*	*Blk*	*Mag*	*SS*	*Brst*	*Rng*
AKMR	5	3	1-Nil	5	30	3	7	45

AK-74

AK-74 (Assault Rifle): The standard combat rifle of the Eastern Bloc forces.

Ammo: 5.45mm B
Wt: 4 kg
Mag: 30 box
Price: $300 (C/C)

						—Recoil—		
Weapon	*ROF*	*Dam*	*Pen*	*Blk*	*Mag*	*SS*	*Brst*	*Rng*
AK-74	5	3	1-Nil	5	30	3	7	50

Armington Laser Carbine Model 2

ALC-2 (Laser): The ALC-2 (Armington Laser Carbine Model 2) is extremely rare. Developed by Armington Laboratories as a testbed for a laser carbine, the ALC never entered full production, although an unknown number of prototypes (each essentially hand-made) were produced. The carbine incorporates a liquid-nitrogen cooling system (the N_2 bottle is plainly seen over the action) which vents itself after each shot, producing a tendril of "steam" that can be disconcerting to the uninitiated. The carbine is connected by a power cable to a rechargeable backpack filled with batteries and a capacitor which requires 30 seconds to recharge after a shot (leading to the weapon's nickname, "Blue Moon," since that was how often it could be fired—"once in a blue moon"). A pair of LEDs on the left side indicate the weapon's status (red for charging, green for charged). A discharged backpack requires six hours to recharge.

Ammo: —
Wt: 26 kg (*Carbine Wt:* 5 kg *Backpack Wt:* 21 kg)
Mag: A backpack is good for 12 shots per charge
Price: $12,000 (—/—)

						—Recoil—		
Weapon	*ROF*	*Dam*	*Pen*	*Blk*	*Mag*	*SS*	*Brst*	*Rng*
ALC-2	1*	12	2	5	12**	—	—	60

*One shot per 30-seconds.
**Backpack is good for 12 shots; none are actually carried "in" weapon.

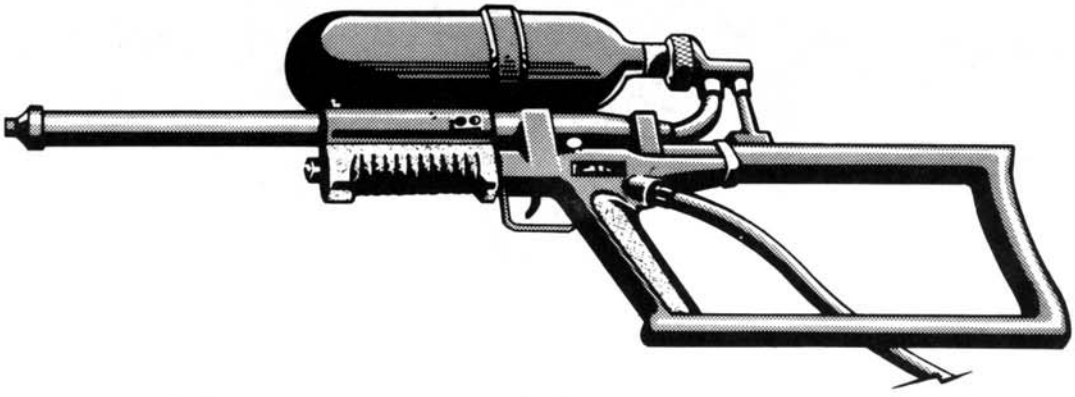

AR-7 Explorer

AR-7 Explorer (Sporting Rifle): Inspired from a US Air Force survival rifle of similar design, the AR-7 Explorer is a .22-caliber semiautomatic rifle designed for use as an emergency hunting weapon by pilots, hikers, boaters, and so on. Very light and readily portable, the weapon disassembles into barrel, action, and stock. The barrel and action can be stored in the hollow stock, along with one magazine (the weapon will float in either state).

Ammo: .22 long rifle
Wt: 1.2 kg
Mag: 7 box
Price: $100 (C/R)

						—Recoil—		
Weapon	*ROF*	*Dam*	*Pen*	*Blk*	*Mag*	*SS*	*Brst*	*Rng*
AR-7	SA	–1	Nil	4	7	3	—	50

AR-10

AR-10 (Battle Rifle): A battle rifle manufactured by the renowned American arms firm of Armalite, the AR-10 was a contender (against the M14) for the replacement weapon for the M1.

Ammo: 7.62mm N
Wt: 4.8 kg
Mag: 20 box
Price: $500 (S/—)

						—Recoil—		
Weapon	*ROF*	*Dam*	*Pen*	*Blk*	*Mag*	*SS*	*Brst*	*Rng*
AR-10	5	4	2-3-Nil	5	20	4	9	65

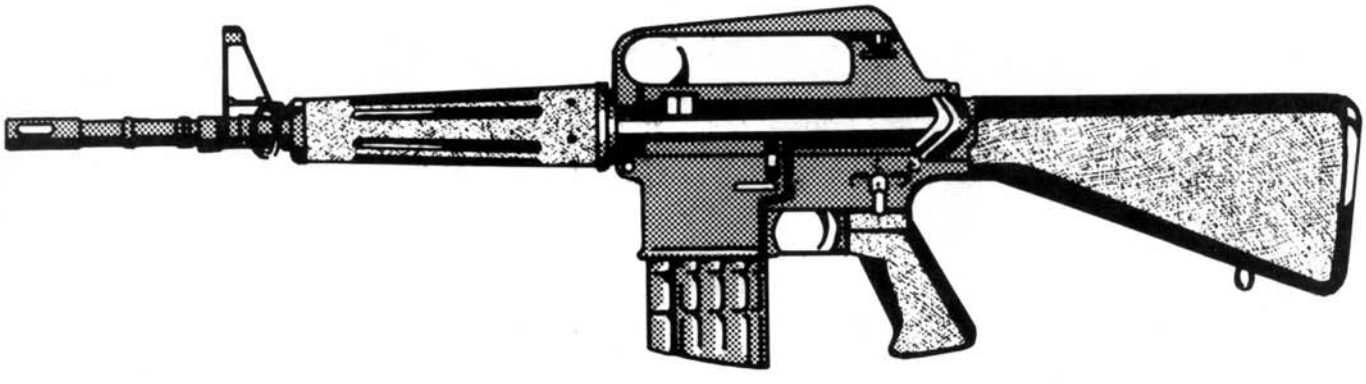

AR-18

AR-18 (Assault Rifle): Designed by Armalite as a replacement for the M16 and rejected by the US Army, the AR-18 was sold on the international arms market.

Ammo: 5.56mm N
Wt: 3.6 kg
Mag: 20 box or 40 box
Price: $450 (S/R)

						—Recoil—		
Weapon	*ROF*	*Dam*	*Pen*	*Blk*	*Mag*	*SS*	*Brst*	*Rng*
AR-18	5	3	1-Nil	4/5	20/40	3	9	55

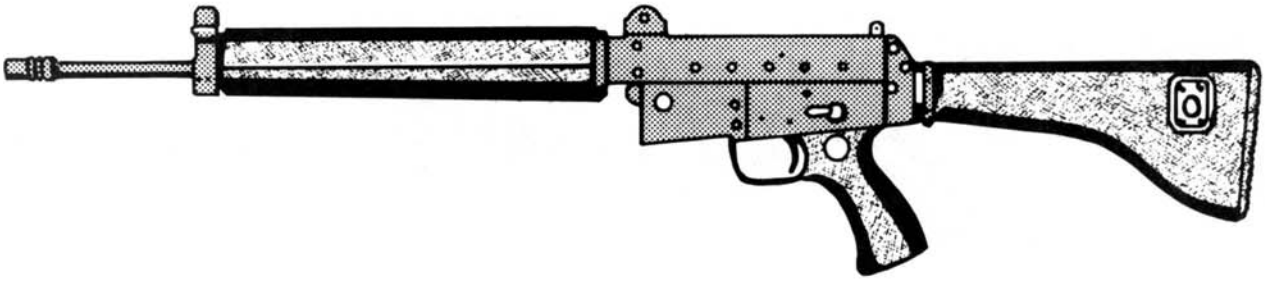

AR-70

AR-70 (Assault Rifle): This weapon is the standard assault rifle of the Italian military forces.

Ammo: 5.56mm N
Wt: 4 kg
Mag: 30 box
Price: $500 (R/—)

						—Recoil—		
Weapon	*ROF*	*Dam*	*Pen*	*Blk*	*Mag*	*SS*	*Brst*	*Rng*
AR-70	5	3	1-Nil	5	30	3	8	55

AR-180

AR-180 (Assault Rifle): The AR-180 is the semiautomatic civilian version of the AR-18 assault rifle.

Ammo: 5.56mm N
Wt: 3.6 kg
Mag: 20 box or 40 box
Price: $400 (S/R)

						—Recoil—		
Weapon	*ROF*	*Dam*	*Pen*	*Blk*	*Mag*	*SS*	*Brst*	*Rng*
AR-180	SA	3	1-Nil	4/5	20/40	3	—	55

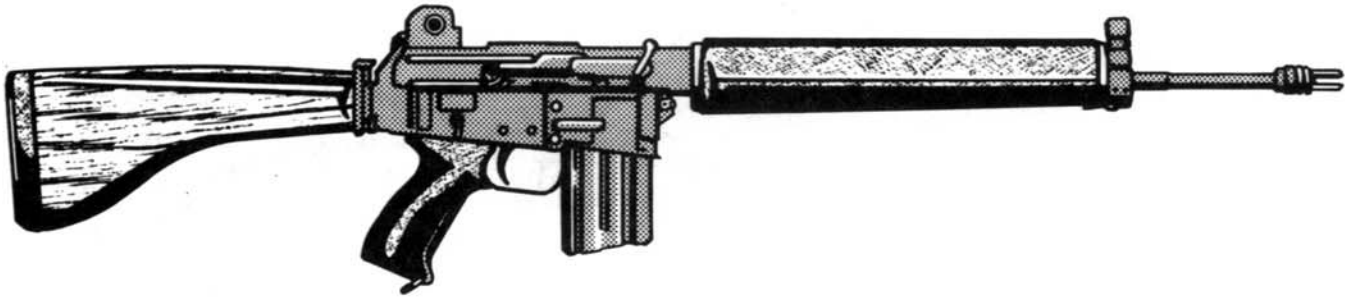

Arisaka Model 99

Arisaka Model 99 (Sporting Rifle): This weapon was the most advanced of several rifles used by the Japanese Army during WWII. But production was limited, and the rifle is not common.

Ammo: .303
Wt: 4 kg
Mag: 5 box
Price: $450 (R/—)

						—Recoil—		
Weapon	*ROF*	*Dam*	*Pen*	*Blk*	*Mag*	*SS*	*Brst*	*Rng*
Arisaka 99	BA	4	2-3-Nil	6	5	4	—	55

Barret M82 "Light Fifty"

Barret M82 "Light Fifty" (Sniper Rifle): A privately marketed semiautomatic .50 BMG-caliber sniper rifle, the M82 is rather difficult for a small person to control, but has a satisfyingly long range.

Ammo: .50 BMG
Wt: 17.5 kg
Mag: 5 box
Price: $2200 (R/—)

						—Recoil—		
Weapon	*ROF*	*Dam*	*Pen*	*Blk*	*Mag*	*SS*	*Brst*	*Rng*
Barret M82	SA	9	2-2-3	4	5	8	—	50
bipod	SA	9	2-2-3	4	5	4	—	90

All sniper rifles come with a scope. With the scope, add 15 meters to the basic range for *aimed* shots. If the scope is later damaged or lost (or for quick shots) this modifier is not added.

BM-59

BM-59 (Battle Rifle): This is an Italian version of the M1 Garand battle rifle rechambered to 7.62mm N. It was the standard military rifle in the Italian Army until replaced by the AR-70.

Ammo: 7.62mm N
Wt: 5.3 kg
Mag: 20 box
Price: $550 (R/R)

						—Recoil—		
Weapon	*ROF*	*Dam*	*Pen*	*Blk*	*Mag*	*SS*	*Brst*	*Rng*
BM-59	5	4	2-3-Nil	5	20	4	9	65

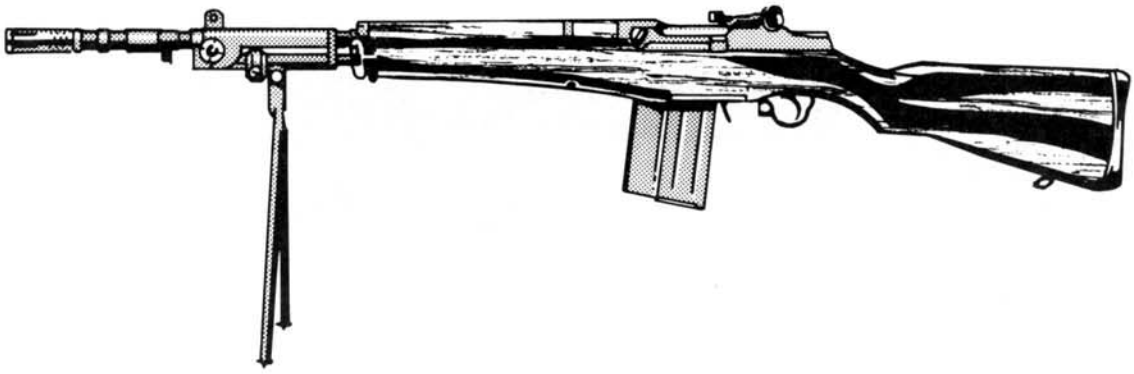

C3 (Parker Hale)

C3 (Parker Hale) (Sniper Rifle): The standard Canadian sniper rifle is a well-made civilian hunting rifle adapted to military use and fitted with a telescopic sight. It is also known as the Parker-Hale in its civilian version.

Ammo: 7.62mm N
Wt: 4 kg
Mag: 3 individual
Price: $400 (R/R)

						—Recoil—		
Weapon	*ROF*	*Dam*	*Pen*	*Blk*	*Mag*	*SS*	*Brst*	*Rng*
C3	BA	4	2-3-Nil	5	3i	5	—	75

All sniper rifles come with a scope. With the scope, add 15 meters to the basic range for *aimed* shots. If the scope is later damaged or lost (or for quick shots) this modifier is not added.

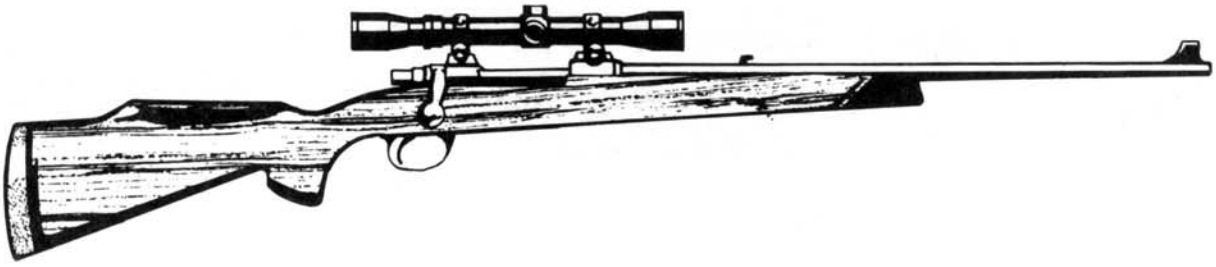

De Lisle Carbine

De Lisle Carbine (Rifle): Developed for clandestine use during WWII, this weapon is designed to use the .45 ACP cartridge in a converted Enfield bolt-action receiver with an integral silencer.

Ammo: .45 ACP
Wt: 3.5 kg
Mag: 10 box
Price: $1000 (R/—)

						—Recoil—		
Weapon	*ROF*	*Dam*	*Pen*	*Blk*	*Mag*	*SS*	*Brst*	*Rng*
De Lisle	BA	2	1-Nil	4	10	3	—	45

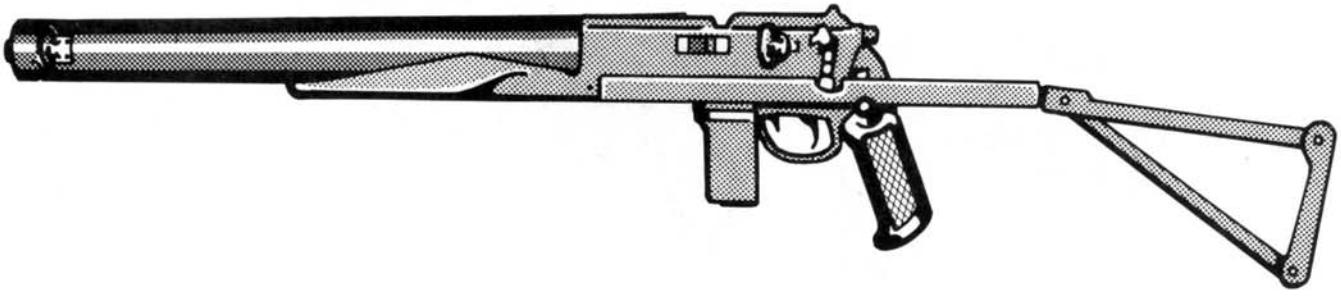

Enfield No. 4, Mk I

Enfield No. 4, Mk I (Sporting Rifle): A British WWI-era bolt-action rifle, now commonly found as a hunting rifle in many parts of the world. It is still used by irregular forces and paramilitary police organizations.

Ammo: .303
Wt: 4.6 kg
Mag: 10 box
Price: $300 (C/S)

						—Recoil—		
Weapon	*ROF*	*Dam*	*Pen*	*Blk*	*Mag*	*SS*	*Brst*	*Rng*
Enfield 4, Mk I	BA	4	2-3-Nil	6	10	4	—	55

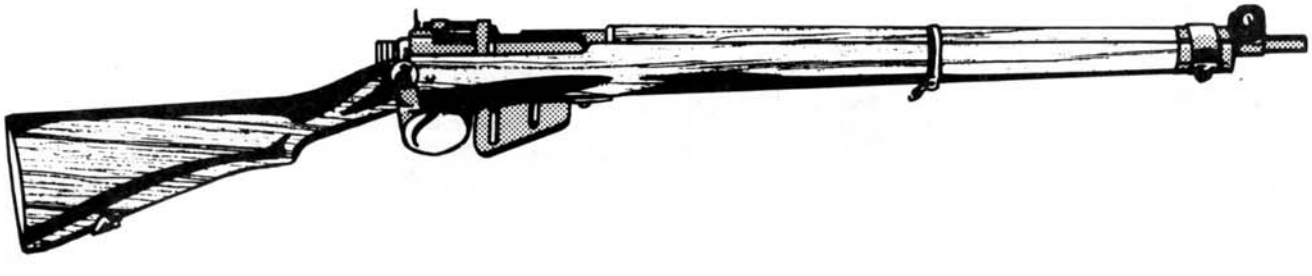

FA-MAS

FA-MAS (Assault Rifle): The standard French military rifle, the FA-MAS is rare outside of French service. It is a bullpup-configuration weapon (which means the action is placed behind the firing hand in the normally empty stock). Bullpup rifles can have a shorter overall length without the necessity for a shorter barrel.

Ammo: 5.56mm N
Wt: 4 kg
Mag: 25 box
Price: $500 (R/—)

						—Recoil—		
Weapon	*ROF*	*Dam*	*Pen*	*Blk*	*Mag*	*SS*	*Brst*	*Rng*
FA-MAS	5	3	1-Nil	4	25	3	8	50

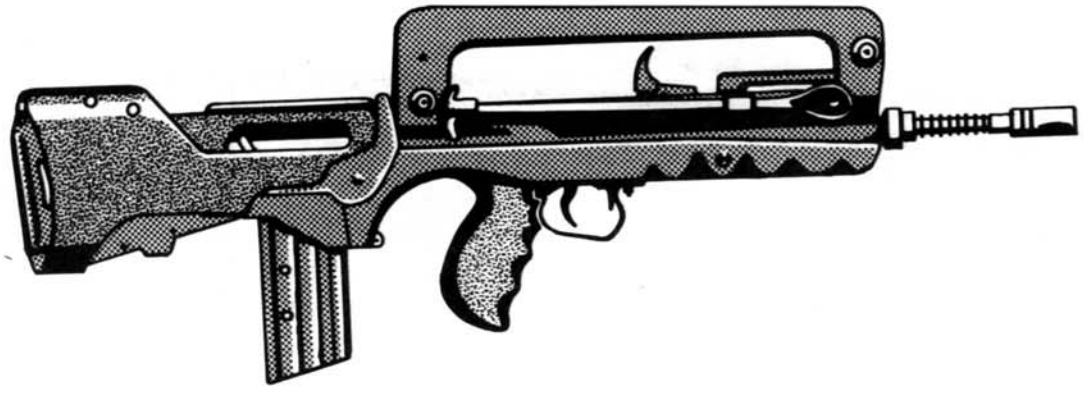

FG-42

FG-42 (Assault Rifle): Developed in WWII for use by German paratroops, this weapon was one of the earliest assault rifles. It served as the basis for many modern designs.

Ammo: 8mm
Wt: 5 kg
Mag: 20 box
Price: $750 (R/—)

						—Recoil—		
Weapon	*ROF*	*Dam*	*Pen*	*Blk*	*Mag*	*SS*	*Brst*	*Rng*
FG-42	5	4	2-3-Nil	5	20	4	9	65
bipod	5	4	2-3-Nil	5	20	2	5	75

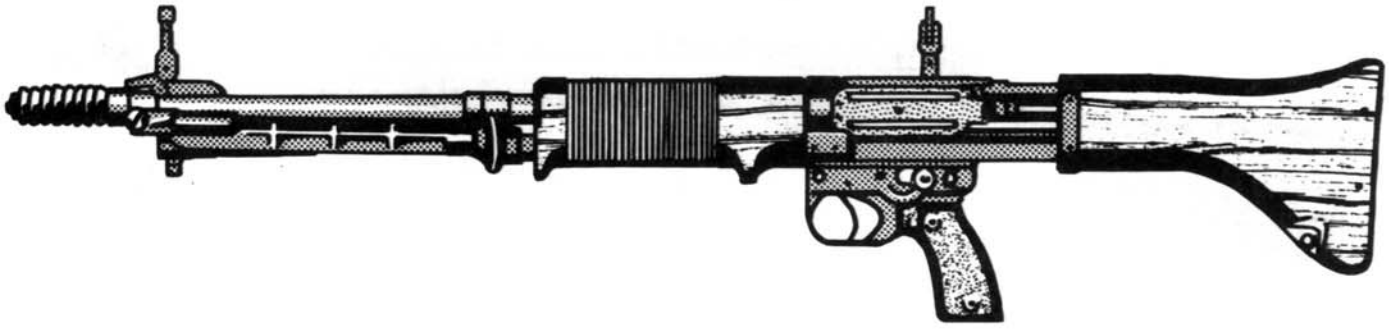

FN-CAL

FN-CAL (Assault Rifle): The CAL (*Carabine Automatique Legere* or light automatic carbine) was designed as a possible replacement for the FN-FAL. It can be fitted with a fixed stock (bulk 5) or a folding stock (bulk 4/5).

Ammo: 5.56mm N
Wt: 3.6 kg
Mag: 20 box or 30 box
Price: $500 (S/R)

						—Recoil—		
Weapon	*ROF*	*Dam*	*Pen*	*Blk*	*Mag*	*SS*	*Brst*	*Rng*
FN-CAL	3	3	1-Nil	4/5	20/30	3	5	55

FN-FAL

FN-FAL (Battle Rifle): A Belgian rifle manufactured for local service and for export, the FAL was a very popular weapon and came into widespread use throughout the world.

Ammo: 7.62mm N
Wt: 5 kg
Mag: 20 box
Price: $600 (S/R)

						—Recoil—		
Weapon	*ROF*	*Dam*	*Pen*	*Blk*	*Mag*	*SS*	*Brst*	*Rng*
FN-FAL	5	4	2-3-Nil	5	20	4	9	65

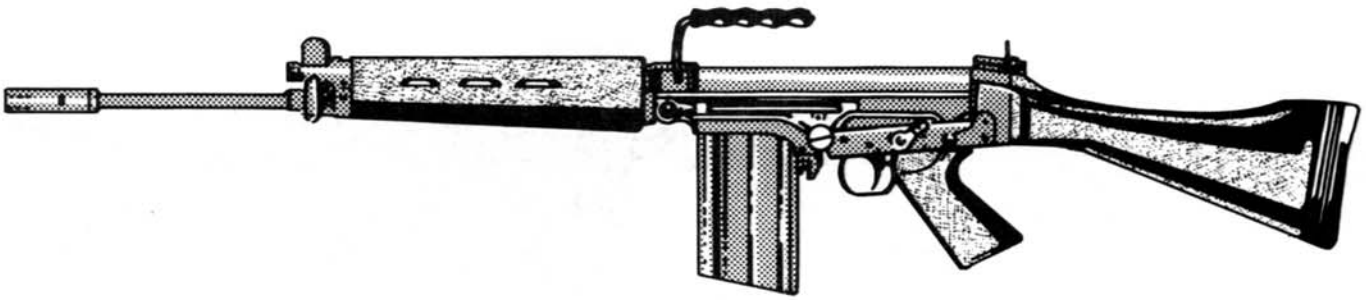

FN-FNC

FN-FNC (Assault Rifle): This is the 5.56mm N assault rifle version of the famed FN-FAL battle rifle.

Ammo: 5.56mm N
Wt: 4 kg
Mag: 30 box
Price: $500 (C/S)

						—Recoil—		
Weapon	*ROF*	*Dam*	*Pen*	*Blk*	*Mag*	*SS*	*Brst*	*Rng*
FN-FNC	3	3	1-Nil	5	30	3	7	50

FN-LAR/L1A1

FN-LAR/L1A1 (Battle Rifle): A Belgian rifle adopted as the standard rifle of the British Army, the LAR has been replaced in service by the L85. The primary differences between the FAL and the LAR are that the FAL has a full auto option, while the British FAL/L1A1 does not. The magazines are not interchangeable.

Ammo: 7.62mm N
Wt: 5 kg
Mag: 20 box
Price: $600 (S/R)

						—Recoil—		
Weapon	*ROF*	*Dam*	*Pen*	*Blk*	*Mag*	*SS*	*Brst*	*Rng*
FN-LAR/L1A1	SA	4	2-3-Nil	5	20	4	—	65

FR-F1

FR-F1 (Sniper Rifle): The French military sniper rifle, rare outside of French service.

Ammo: 7.5mm MAS
Wt: 5.7 kg
Mag: 10 box
Price: $900 (R/—)

						—Recoil—		
Weapon	*ROF*	*Dam*	*Pen*	*Blk*	*Mag*	*SS*	*Brst*	*Rng*
FR-F1	SA	4	2-Nil	6	10	3	—	75

All sniper rifles come with a scope. With the scope, add 15 meters to the basic range for *aimed* shots. If the scope is later damaged or lost (or for quick shots) this modifier is not added.

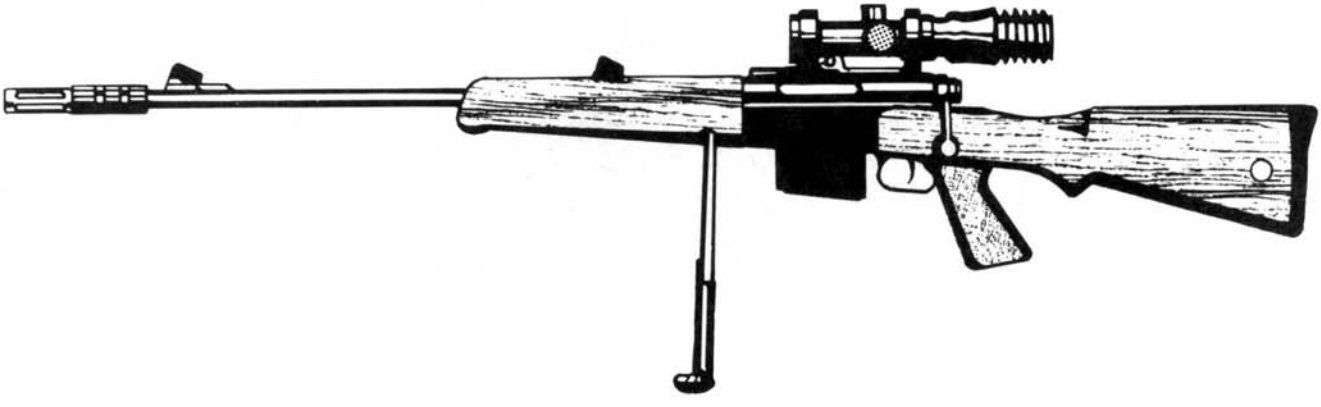

G3

G3 (Battle Rifle): The standard German assault rifle until replaced by the G11, the G3 was still widely used by territorial and internal security troops and is now back in service with German troops. It is quite popular in Latin America, possibly since it is taken from an earlier Spanish design.

Ammo: 7.62mm N
Wt: 5 kg
Mag: 20 box
Price: $500 (C/R)

						—Recoil—		
Weapon	*ROF*	*Dam*	*Pen*	*Blk*	*Mag*	*SS*	*Brst*	*Rng*
G3	5	4	2-3-Nil	5	20	4	9	65

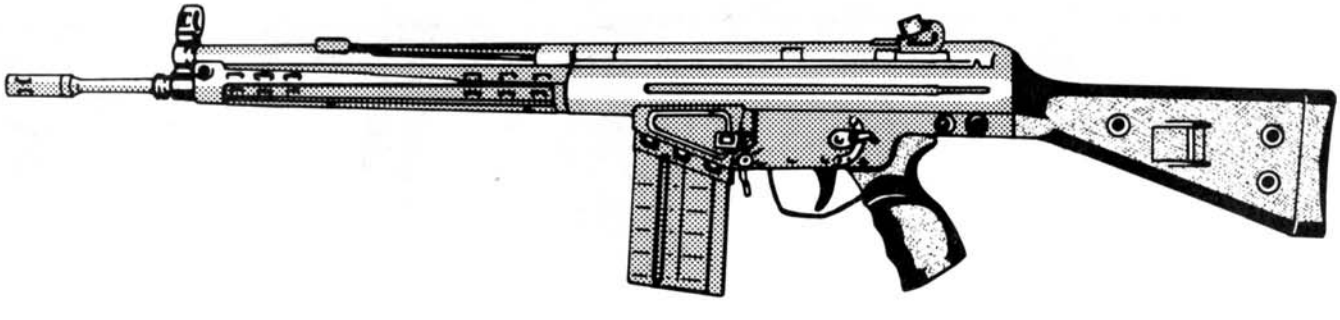

G11

G11 (Assault Rifle): A weapon of radical design and great effectiveness, the G11 replaced the G3 as the standard assault rifle and the Uzi as the standard submachinegun of the German Army. It is a bullpup-configuration weapon.

It differs from other combat rifles in that it fires caseless 4.7mm bullets. The compact nature of the weapon and low recoil of its round make it as handy as a submachinegun (even though it is a rifle).

Its caseless ammunition is extremely compact, allowing a large magazine capacity. Since there is no spent cartridge casing to eject, the rifle's action is completely enclosed and thus is very reliable in a dirty environment. However, there is no way to reload the round since it is completely consumed.

Ammo: 4.7mm caseless
Wt: 4.5 kg
Mag: 50 box
Price: $400 (S/R)

						—Recoil—		
Weapon	*ROF*	*Dam*	*Pen*	*Blk*	*Mag*	*SS*	*Brst*	*Rng*
G11	3	3	1-Nil	4	50	2	3	55

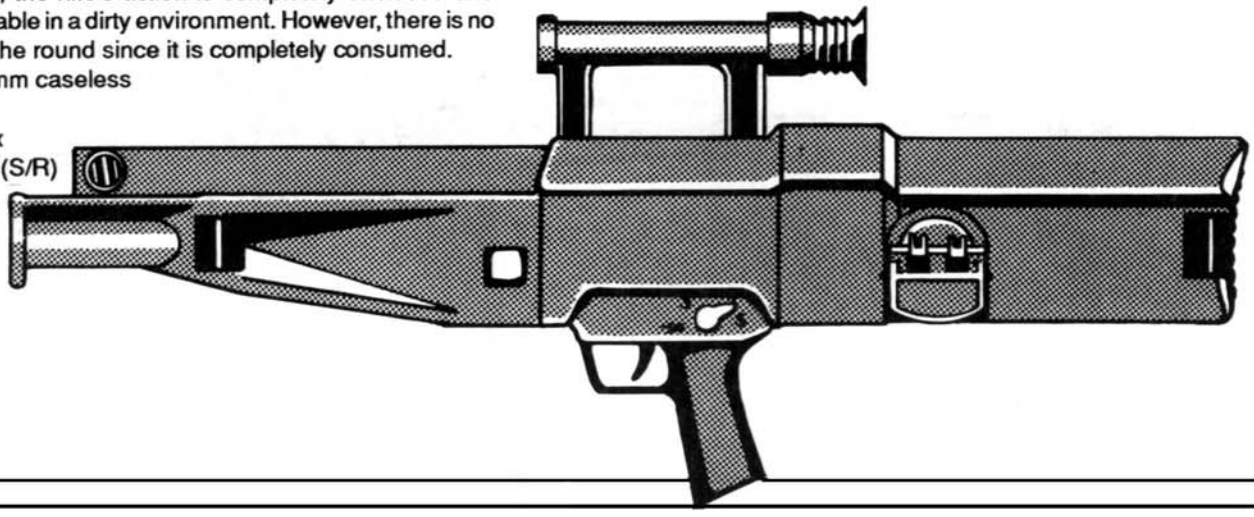

Galil ARM

Galil ARM (Assault Rifle): The Galil is an Israeli-built assault rifle, manufactured for domestic use and for export.

Ammo: 5.56mm N
Wt: 4.6 kg
Mag: 35 box or 50 box
Price: $600 (S/S)

						—Recoil—		
Weapon	*ROF*	*Dam*	*Pen*	*Blk*	*Mag*	*SS*	*Brst*	*Rng*
Galil ARM	5	3	1-Nil	4/5	35/50	3	7	55

H&H .600 Nitro

H&H .600 Nitro (Sporting Rifle): The word *Nitro* in the name of this big game rifle refers to that fact that it uses nitrocellulose (modern smokeless powder) instead of black powder—a necessary distinction at the time of the weapon's introduction in the late 19th century. The weapon is an old-model "double rifle," which means that it has two barrels side-by-side and breaks open like a double-barreled shotgun. The weapon and its cartridges (which are the size of cigars) are extremely rare.

Ammo: .600 Nitro
Wt: 7.9 kg
Mag: 2 individual
Price: $1500 (—/—)

						—Recoil—		
Weapon	*ROF*	*Dam*	*Pen*	*Blk*	*Mag*	*SS*	*Brst*	*Rng*
.600 Nitro	—	7	2-4-6	5	2i	6	—	40

HK 33A2

HK 33A2 (Assault Rifle): This weapon is the 5.56 N assault rifle version of the G3 battle rifle.

Ammo: 5.56mm N
Wt: 3.5 kg
Mag: 20 box or 40 box
Price: $345 (S/R)

						—Recoil—		
Weapon	*ROF*	*Dam*	*Pen*	*Blk*	*Mag*	*SS*	*Brst*	*Rng*
HK 33A2	5	3	1-Nil	5	20/40	3	8	55

KAR-98K

KAR-98K (Battle Rifle): The standard rifle of German troops in WWII.

Ammo: 8mm M
Wt: 4 kg
Mag: 5 individual
Price: $300 (S/R)

						—Recoil—		
Weapon	*ROF*	*Dam*	*Pen*	*Blk*	*Mag*	*SS*	*Brst*	*Rng*
KAR-98K	BA	4	2-3-Nil	5	5i	4	—	65

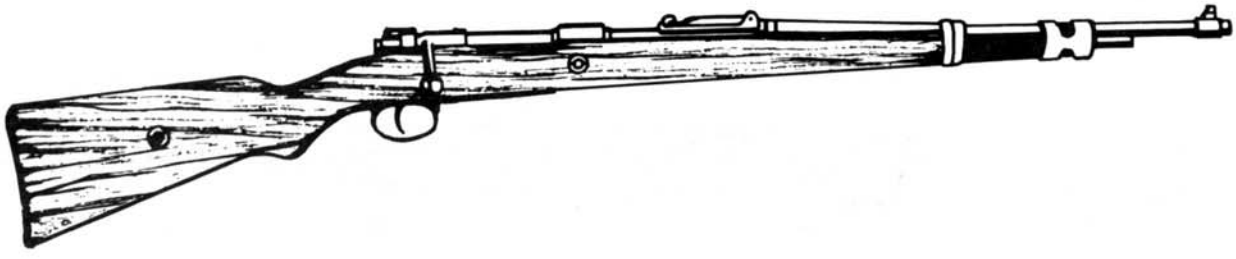

L42A1

L42A1 (Sniper Rifle): The standard sniper rifle of the British Army is a progressive development of the bolt-action, short-magazine Lee Enfield (the WWII British service rifle), rechambered to fire more modern ammunition and fitted with a telescopic sight.

Ammo: 7.62mm N
Wt: 4.8 kg
Mag: 5 box
Price: $400 (R/R)

						—Recoil—		
Weapon	*ROF*	*Dam*	*Pen*	*Blk*	*Mag*	*SS*	*Brst*	*Rng*
L42A1	BA	4	2-3-Nil	5	5	4	—	75

All sniper rifles come with a scope. With the scope, add 15 meters to the basic range for *aimed* shots. If the scope is later damaged or lost (or for quick shots) this modifier is not added.

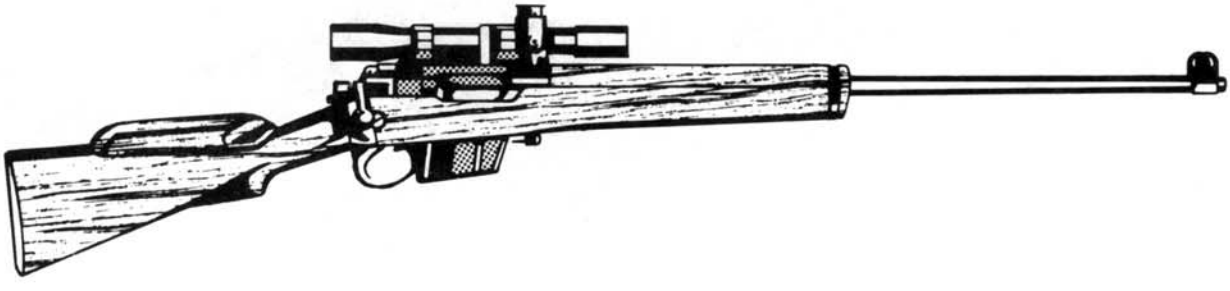

L85 IWS

L85 IWS (Assault Rifle): The standard British combat rifle, replacing the FAL. Like the G11, the L85 is a bullpup-configuration rifle. It is rare outside of British service.

Ammo: 5.56mm N
Wt: 4.2 kg
Mag: 20 box
Price: $1500 (R/R)

						—Recoil—		
Weapon	*ROF*	*Dam*	*Pen*	*Blk*	*Mag*	*SS*	*Brst*	*Rng*
L85 IWS	5	3	1-Nil	4	20	3	7	50

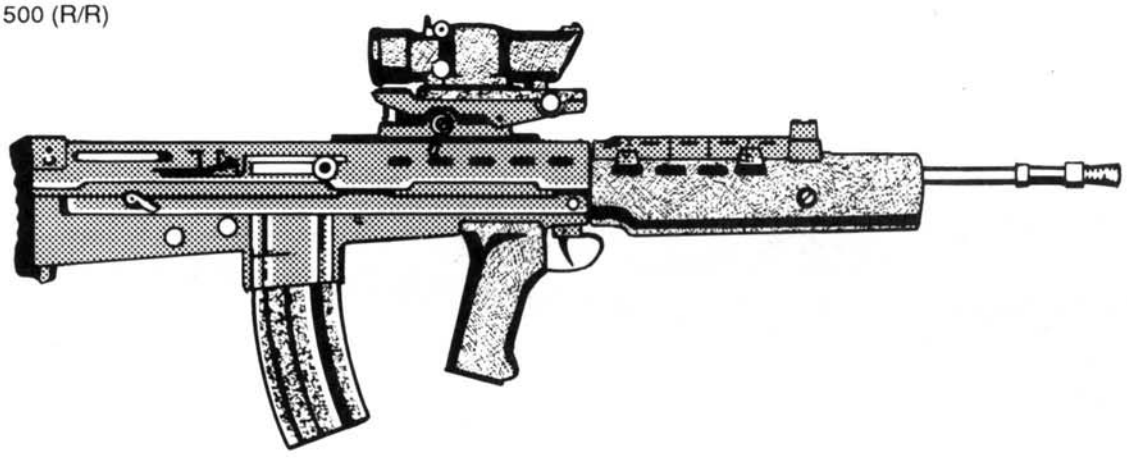

M1 Carbine

M1 Carbine (Assault Rifle): The M1 carbine was developed as a replacement for the M1911A1 pistol during WWII. The intention was to give troops who could not always carry the heavier M1 Garand a weapon more powerful than a pistol to defend themselves with. After the war, many entered the surplus market, and thousands were given away as a part of the government's civilian marksmanship program.

Ammo: .30 C
Wt: 2.5 kg
Mag: 15 box
Price: $600 (C/S)

						—Recoil—		
Weapon	*ROF*	*Dam*	*Pen*	*Blk*	*Mag*	*SS*	*Brst*	*Rng*
M1 Carbine	SA	2	1-Nil	4	15	3	—	45

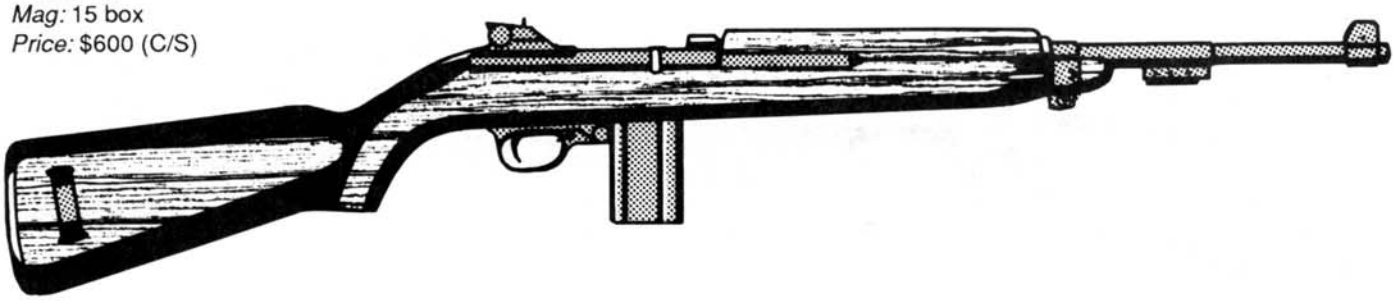

M1 Garand

M1 Garand (Battle Rifle): The standard American rifle throughout most of WWII and the first semiautomatic battle rifle to see service. The M1 has an internal magazine into which eight-round clips are inserted from the top, with the bolt retracted. When the last round of a clip is fired, the action will eject the empty clip into the air with a loud ping, announcing to all who can hear it that the rifle is out of ammunition.

Ammo: .30-06
Wt: 4.3 kg
Mag: 8 box (really uses a stripper clip to reload)
Price: $600 (C/S)

						—Recoil—		
Weapon	*ROF*	*Dam*	*Pen*	*Blk*	*Mag*	*SS*	*Brst*	*Rng*
M1 Garand	SA	4	2-3-Nil	5	8	3	—	70

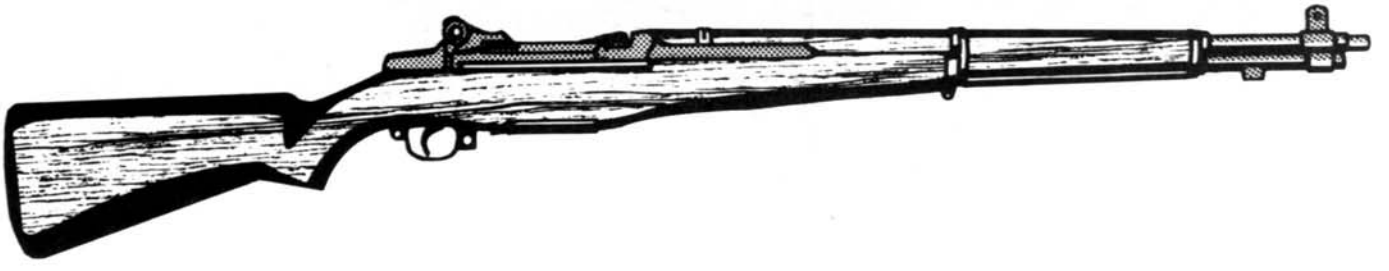

M2 Carbine

M2 Carbine (Assault Rifle): The M2 Carbine is the fully automatic version of the M1 Carbine. After the war, many of these were sold to police agencies and paramilitary organizations worldwide.

Ammo: .30 C
Wt: 3 kg
Mag: 15 box or 30 box
Price: $800 (S/R)

						—Recoil—		
Weapon	*ROF*	*Dam*	*Pen*	*Blk*	*Mag*	*SS*	*Brst*	*Rng*
M2 Carbine	5	2	1-Nil	4	15/30	3	8	50

M14

M14 (Battle Rifle): A post-WWII battle rifle, in service with the US Army from the 1950s to the 1960s, when it was replaced by the M16 series.

Ammo: 7.62mm N
Wt: 4.8 kg
Mag: 20 box
Price: $400 (S/R)

						—Recoil—		
Weapon	*ROF*	*Dam*	*Pen*	*Blk*	*Mag*	*SS*	*Brst*	*Rng*
M14	5	4	2-3-Nil	6	20	4	9	70

M16A1/AR-15

M16A1 (Assault Rifle): This is the older, Vietnam-era version of the M16 series. A semiautomatic civilian version is also produced, called the AR-15.

Ammo: 5.56mm N
Wt: 3.6 kg
Mag: 20 box or 30 box
Price: $400 (C/S) (*AR-15 Price:* $300 (C/S))

						—Recoil—		
Weapon	*ROF*	*Dam*	*Pen*	*Blk*	*Mag*	*SS*	*Brst*	*Rng*
M16A1	5	2	1-Nil	5	20/30	2	5	55
AR-15	SA	2	1-Nil	5	20/30	2	—	55

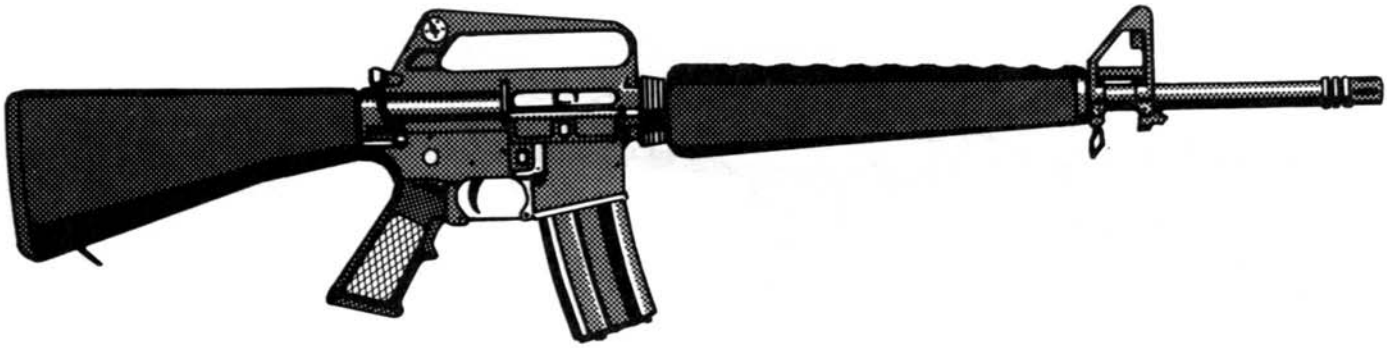

M16A2

M16A2 (Assault Rifle): The standard combat rifle of the US and Canadian armies, the M16A2 (commonly called just the "M16") is in widespread use and is a popular and effective weapon.

Ammo: 5.56mm N
Wt: 3.8 kg
Mag: 20 box or 30 box
Price: $400 (V/C)

						—Recoil—		
Weapon	*ROF*	*Dam*	*Pen*	*Blk*	*Mag*	*SS*	*Brst*	*Rng*
M16A2	3	3	1-Nil	5	20/30	3	5	55

M21

M21 (Sniper Rifle): The standard US Army sniper rifle, the M21 is essentially a well-made M14 assault rifle (the US Army's service rifle prior to the M16) fitted with a telescopic sight and a bipod.

Ammo: 7.62mm N
Wt: 5.4 kg
Mag: 20 box
Price: $400 (S/R)

						—Recoil—		
Weapon	*ROF*	*Dam*	*Pen*	*Blk*	*Mag*	*SS*	*Brst*	*Rng*
M21	SA	4	2-3-Nil	6	20	4	—	65
bipod	SA	4	2-3-Nil	6	20	2	—	75

All sniper rifles come with a scope. With the scope, add 15 meters to the basic range for *aimed* shots. If the scope is later damaged or lost (or for quick shots) this modifier is not added.

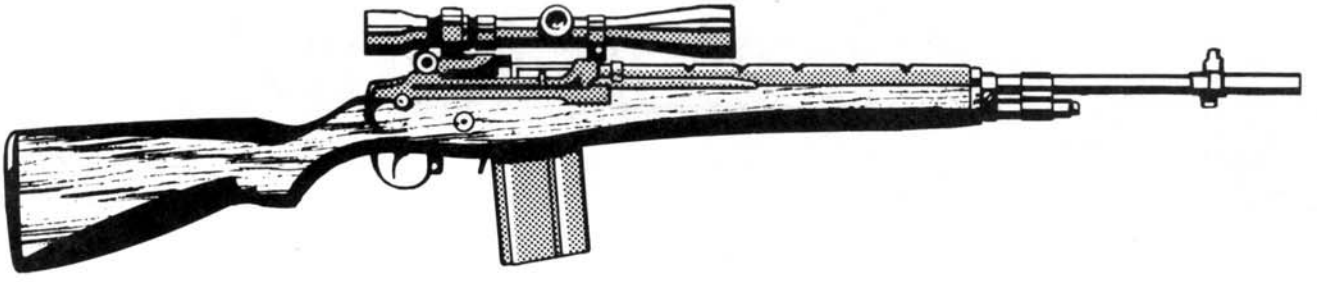

M40

M40 (Sniper Rifle): The standard US Marine sniper rifle, the M40 is a bolt-action, magazine-fed rifle with a telescopic sight.

Ammo: 7.62mm N
Wt: 3 kg
Mag: 5 individual
Price: $700 (R/R)

						—Recoil—		
Weapon	*ROF*	*Dam*	*Pen*	*Blk*	*Mag*	*SS*	*Brst*	*Rng*
M40	BA	4	2-3-Nil	5	5i	7	—	75

All sniper rifles come with a scope. With the scope, add 15 meters to the basic range for *aimed* shots. If the scope is later damaged or lost (or for quick shots) this modifier is not added.

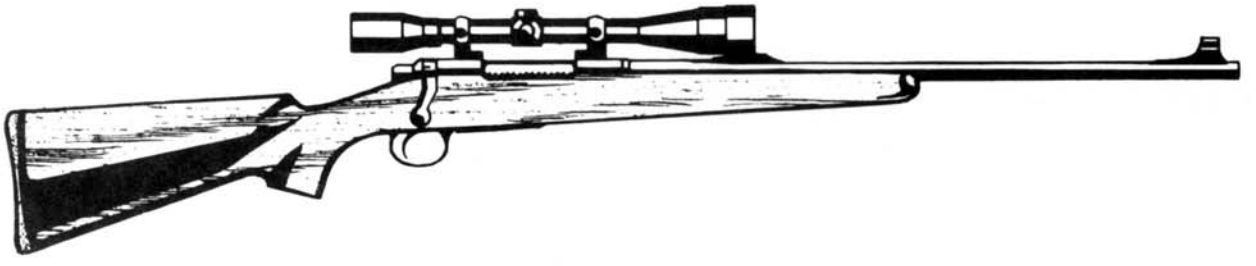

MAS-49/56

MAS-49/56 (Assault Rifle): A French assault rifle, now replaced by the FA-MAS.

Ammo: 7.5mm MAS
Wt: 4.3 kg
Mag: 10 box
Price: $550 (C/R)

						—Recoil—		
Weapon	*ROF*	*Dam*	*Pen*	*Blk*	*Mag*	*SS*	*Brst*	*Rng*
MAS-49/56	SA	4	2-Nii	5	10	4	—	65

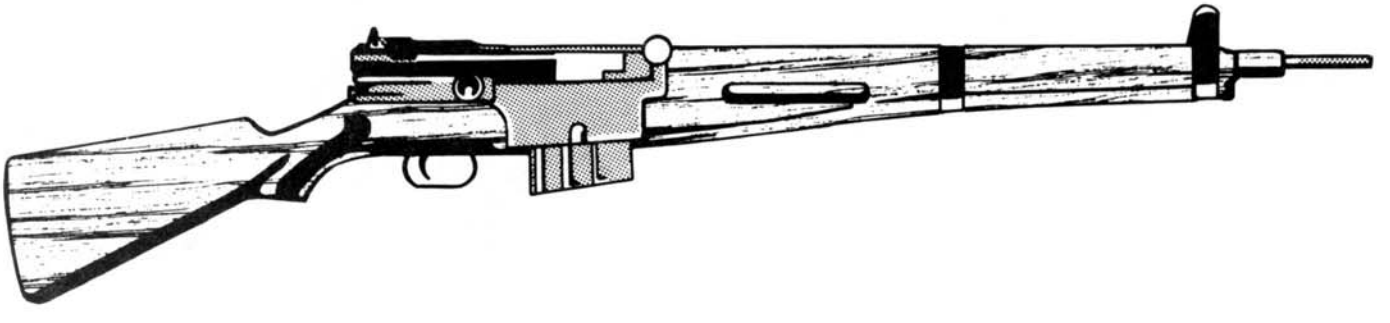

Mk I Boys Antitank Rifle

Mk I Boys Antitank Rifle (Sniper Rifle): Named after its British inventor, Colonel Boys, this weapon is a sniper rifle converted from a British WWII antitank rifle (primarily by the addition of a scope mount).

Ammo: .55 Boys
Wt: 17.2 kg
Mag: 5 box
Price: $1200 (R/—)

						—Recoil—		
Weapon	*ROF*	*Dam*	*Pen*	*Blk*	*Mag*	*SS*	*Brst*	*Rng*
Mk I Boys	SA	11	2-2-3	8	5	9	—	20
monopod	SA	11	2-2-3	8	5	5	—	75

All sniper rifles come with a scope. With the scope, add 15 meters to the basic range for *aimed* shots. If the scope is later damaged or lost (or for quick shots) this modifier is not added.

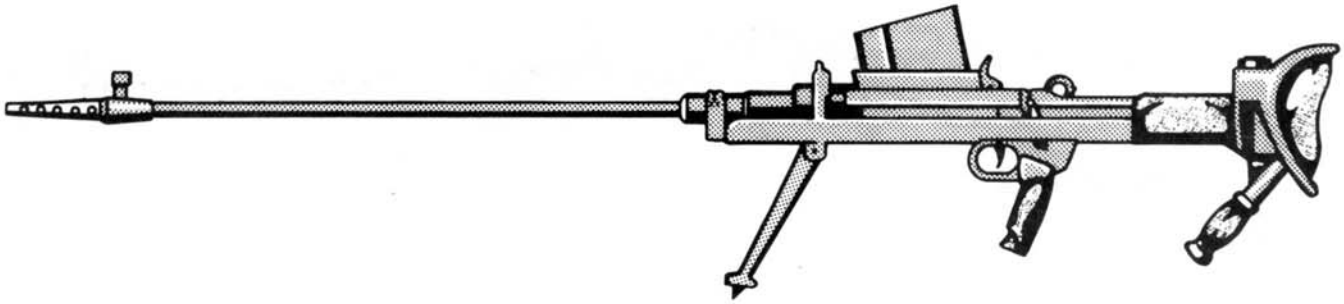

MKS

MKS (Assault Rifle): A Swedish assault rifle.

Ammo: 5.56mm N
Wt: 3.4 kg
Mag: 30 box
Price: $475 (R/—)

						—Recoil—		
Weapon	*ROF*	*Dam*	*Pen*	*Blk*	*Mag*	*SS*	*Brst*	*Rng*
MKS	5	3	1-Nil	3/4	30	4	9	55

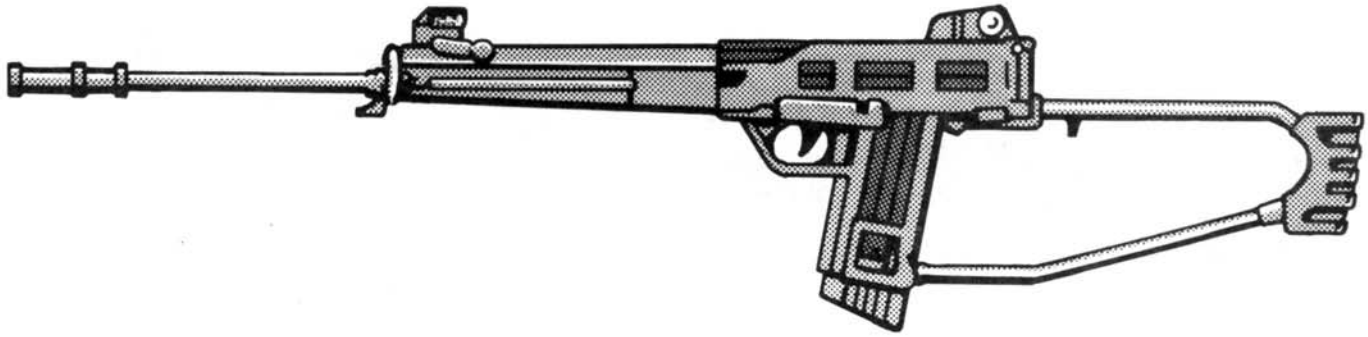

MP-44

MP-44 (Assault Rifle): The MP-44, also known as the Sturmgewehr 44 (assault rifle 44) is a German WWII weapon considered to be the first purpose-built assault rifle. The Soviet Kalishnikov assault rifles were inspired by this weapon. The cartridge was created especially for this weapon and designed to strike a median point between the size and power of pistol cartridges and full-sized rifle cartridges.

Ammo: 8mm K
Wt: 5.2 kg
Mag: 30 box
Price: $750 (S/R)

						—Recoil—		
Weapon	*ROF*	*Dam*	*Pen*	*Blk*	*Mag*	*SS*	*Brst*	*Rng*
MP-44	5	3	1-Nil	5	30	3	7	55

Nagant M1891/30

Nagant M1891/30 (Battle Rifle): This was the primary weapon of Soviet soldiers in WWII and can still be found in service in some central Asian militias.

Ammo: 7.62mm B
Wt: 4.6 kg
Mag: 5 box (really uses a stripper clip to reload)
Price: $275 (—/S)

						—Recoil—		
Weapon	*ROF*	*Dam*	*Pen*	*Blk*	*Mag*	*SS*	*Brst*	*Rng*
M1891/30	BA	4	2-3-Nil	6	5	3	—	75

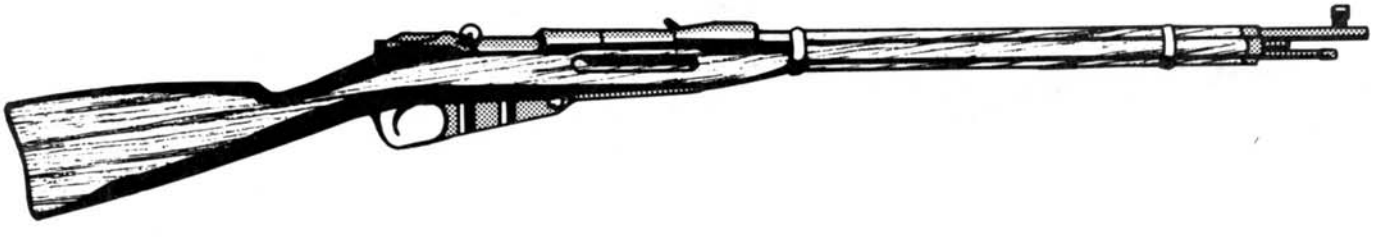

PSG1

PSG1 (Sniper Rifle): The standard German sniper rifle, the PSG1 is a development of the G3 assault rifle fitted with a telescopic sight.

Ammo: 7.62mm N
Wt: 8 kg
Mag: 20 box
Price: $600 (R/R)

						—Recoil—		
Weapon	*ROF*	*Dam*	*Pen*	*Blk*	*Mag*	*SS*	*Brst*	*Rng*
PSG1	SA	4	2-3-Nil	6	20	6	—	75

All sniper rifles come with a scope. With the scope, add 15 meters to the basic range for *aimed* shots. If the scope is later damaged or lost (or for quick shots) this modifier is not added.

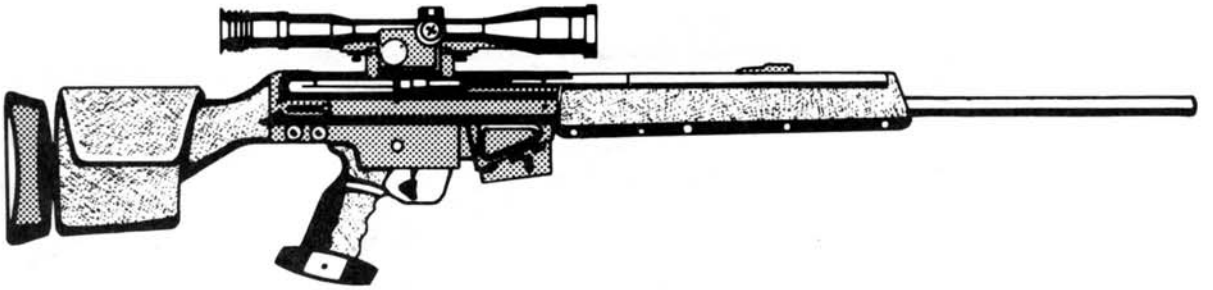

PTRS-41

PTRS-41 (Sniper Rifle): A WWII-vintage Soviet antitank rifle, the PTRS-41 was converted for use as a sniper rifle by the addition of a scope mount.

Ammo: 14.5mm B
Wt: 22 kg
Mag: 5 box
Price: $1200 (—/R)

						—Recoil—		
Weapon	*ROF*	*Dam*	*Pen*	*Blk*	*Mag*	*SS*	*Brst*	*Rng*
PTRS-41	SA	12	2-2-3	11	5	10	—	40
bipod	SA	12	2-2-3	11	5	5	—	75

All sniper rifles come with a scope. With the scope, add 15 meters to the basic range for *aimed* shots. If the scope is later damaged or lost (or for quick shots) this modifier is not added.

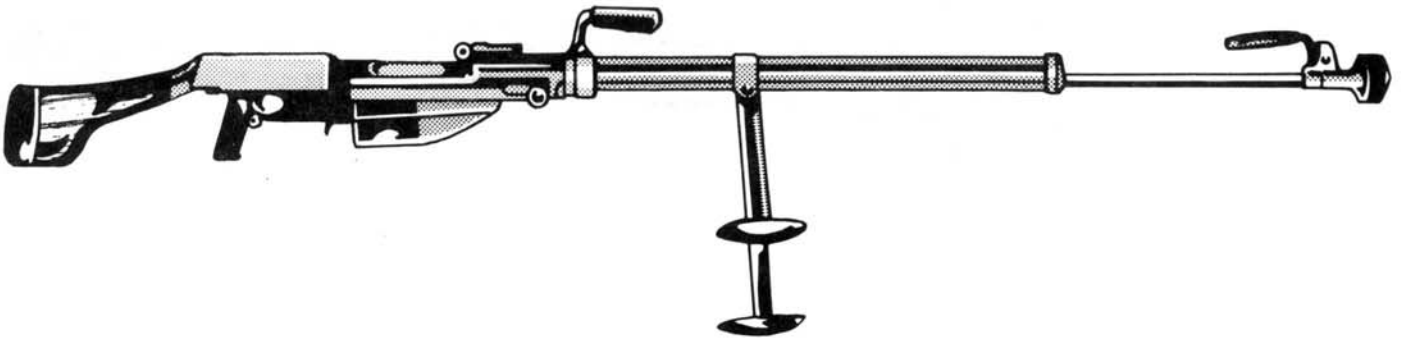

PzB 39

PzB 39 (Sniper Rifle): A German WWII antitank rifle which uses a very large, very powerful cartridge to push a very small bullet. A few have been converted for use as sniper rifles by the addition of a scope mount.

Ammo: 8mm P
Wt: 12.7 kg
Mag: 1 individual
Price: $1450 (R/—)

						—Recoil—		
Weapon	*ROF*	*Dam*	*Pen*	*Blk*	*Mag*	*SS*	*Brst*	*Rng*
PzB 39	BA	14	2-2-3	8	1i	13	—	40
bipod	BA	14	2-2-3	8	1i	6	—	75

All sniper rifles come with a scope. With the scope, add 15 meters to the basic range for *aimed* shots. If the scope is later damaged or lost (or for quick shots) this modifier is not added.

Remington M700

Remington M700 (Sporting Rifle): This weapon is a civilian bolt-action hunting rifle. A modified version is used as a sniper rifle by the US Marines.

Ammo: 7.62mm N
Wt: 3.2 kg
Mag: 5 individual
Price: $450 (C/R)

						—Recoil—		
Weapon	*ROF*	*Dam*	*Pen*	*Blk*	*Mag*	*SS*	*Brst*	*Rng*
M700	BA	4	2-3-Nil	5	5i	5	—	75

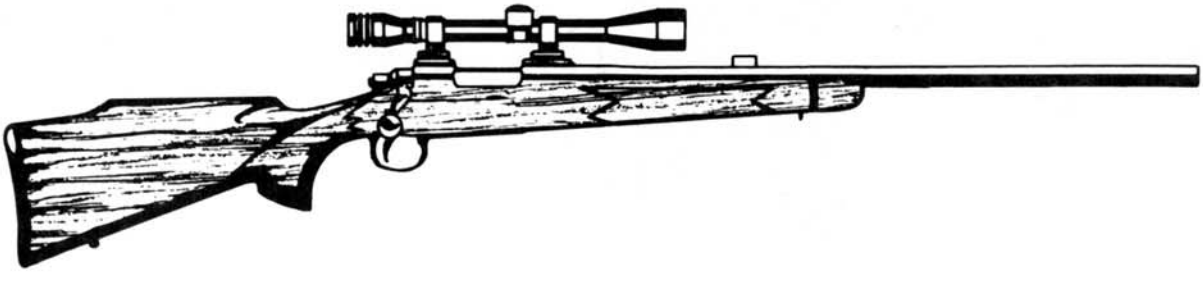

Ruger Mini-14/AC-556

Ruger Mini-14/AC-556 (Assault Rifle): A weapon based on the M14 action, but in 5.56mm N caliber, the semiautomatic Mini-14 is a very popular civilian hunting rifle. The AC-556 is the fully automatic military version.

Ammo: 5.56mm N
Wt: 3.4 kg
Mag: 20 box or 30 box
Price: $250 (C/R) (*AC-556 Price:* $550 (S/—))

						—Recoil—		
Weapon	*ROF*	*Dam*	*Pen*	*Blk*	*Mag*	*SS*	*Brst*	*Rng*
Mini-14	SA	3	1-Nil	5	20/30	4	—	50
AC-556	5	3	1-Nil	5	20/30	4	9	50

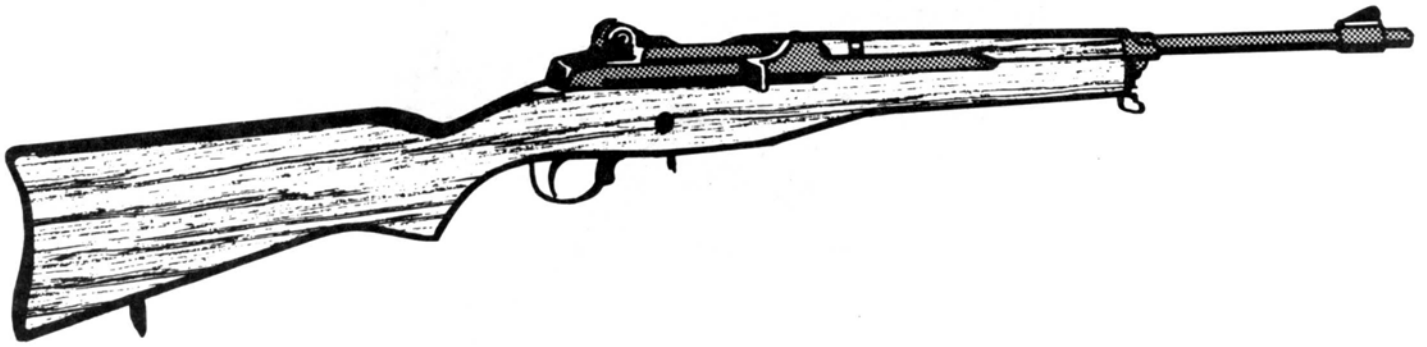

SIG 510-4

SIG 510-4 (Assault Rifle): This weapon is a Swiss-built assault rifle found in service with the armies of Switzerland and several South American countries.

Ammo: 7.62mm N
Wt: 5 kg
Mag: 20 box
Price: $550 (S/R)

						—Recoil—		
Weapon	*ROF*	*Dam*	*Pen*	*Blk*	*Mag*	*SS*	*Brst*	*Rng*
SIG 510-4	5	4	2-3-Nil	5	20	4	9	65

SKS

SKS (Battle Rifle): The SKS (*Samozaryadnyi i Karabin Simonova* or Simonov's carbine) is a Soviet semiautomatic battle rifle in service with a large number of Third World countries. It was the first weapon to use the 7.62mm S cartridge.

Ammo: 7.62mm S
Wt: 4 kg
Mag: 10 box
Price: $250 (S/C)

						—Recoil—		
Weapon	*ROF*	*Dam*	*Pen*	*Blk*	*Mag*	*SS*	*Brst*	*Rng*
SKS	SA	4	2-Nil	5	10	3	—	55

Springfield 1873

Springfield 1873 (Sporting Rifle): The standard US military rifle in the late 19th century, the Springfield "Trapdoor" (so called because of its uniquely designed hinged breech system) remained a popular sporting rifle well into the 20th century. A number of these rifles are still in the hands of primitive peoples throughout the world because of the ease with which the cartridges can be reloaded.

Ammo: .45-70 Govt
Wt: 4.5 kg
Mag: 1 individual
Price: $250 (S/R)

						—Recoil—		
Weapon	*ROF*	*Dam*	*Pen*	*Blk*	*Mag*	*SS*	*Brst*	*Rng*
1873	SS	3	2-Nil	7	1i	3	—	55

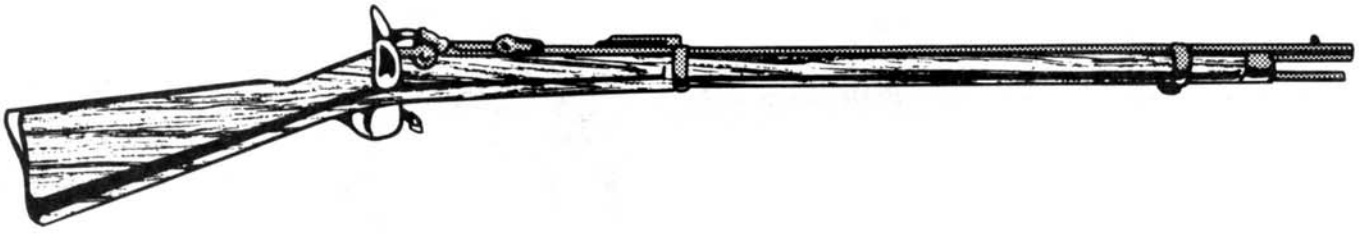

Springfield 1903

Springfield 1903 (Sporting Rifle): The standard American rifle throughout the first half of the 20th century, it is still used as a sniper rifle by some units.

Ammo: .30-06
Wt: 4.2 kg
Mag: 5 box (really uses a stripper clip to reload)
Price: $450 (R/—)

						—Recoil—		
Weapon	*ROF*	*Dam*	*Pen*	*Blk*	*Mag*	*SS*	*Brst*	*Rng*
1903	BA	4	2-3-Nil	5	5	4	—	75

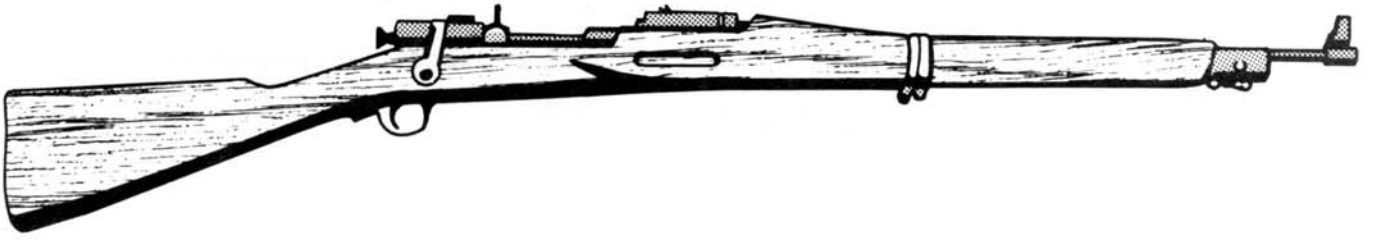

Stoner M22 Rifle

Stoner M22 Rifle (Assault Rifle): The assault rifle version of the Stoner 63 weapons system. (The Stoner system is a kit of parts from which a rifle, a carbine, and several machineguns could be assembled, using a common action.) The system is no longer manufactured and is quite rare.

Ammo: 5.56mm N
Wt: 4.2 kg
Mag: 30 box
Price: $650 (R/—)

						—Recoil—		
Weapon	*ROF*	*Dam*	*Pen*	*Blk*	*Mag*	*SS*	*Brst*	*Rng*
M22	5	3	1-Nil	5	30	3	8	55

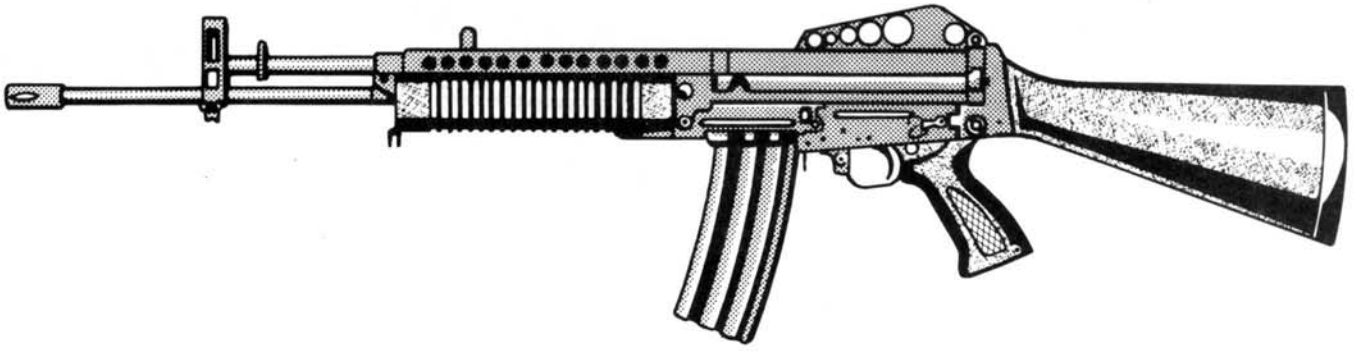

Stoner M23 Carbine

Stoner M23 Carbine (Assault Rifle): The carbine version of the Stoner 63 system.

Ammo: 5.56mm N
Wt: 4.2 kg
Mag: 30 box
Price: $650 (R/—)

						—Recoil—		
Weapon	*ROF*	*Dam*	*Pen*	*Blk*	*Mag*	*SS*	*Brst*	*Rng*
M23 Carbine	5	3	1-Nil	3/4	30	3	7	50

Steyr AUG

Steyr AUG (Assault Rifle): An Austrian-designed, bullpup-configuration assault rifle, in use by a number of armies throughout the world.

Ammo: 5.56mm N
Wt: 3.3 kg
Mag: 30 box
Price: $400 (S/R)

						—Recoil—		
Weapon	*ROF*	*Dam*	*Pen*	*Blk*	*Mag*	*SS*	*Brst*	*Rng*
Steyr AUG	5	3	1-Nil	4	30	3	8	50

Steyr AUG Carbine

Steyr AUG Carbine (Assault Rifle): This is a more compact version of the Steyr AUG.

Ammo: 5.56mm N
Wt: 3.1 kg
Mag: 30 box
Price: $400 (S/R)

						—Recoil—		
Weapon	*ROF*	*Dam*	*Pen*	*Blk*	*Mag*	*SS*	*Brst*	*Rng*
AUG Carbine	5	3	1-Nil	3	30	4	9	45

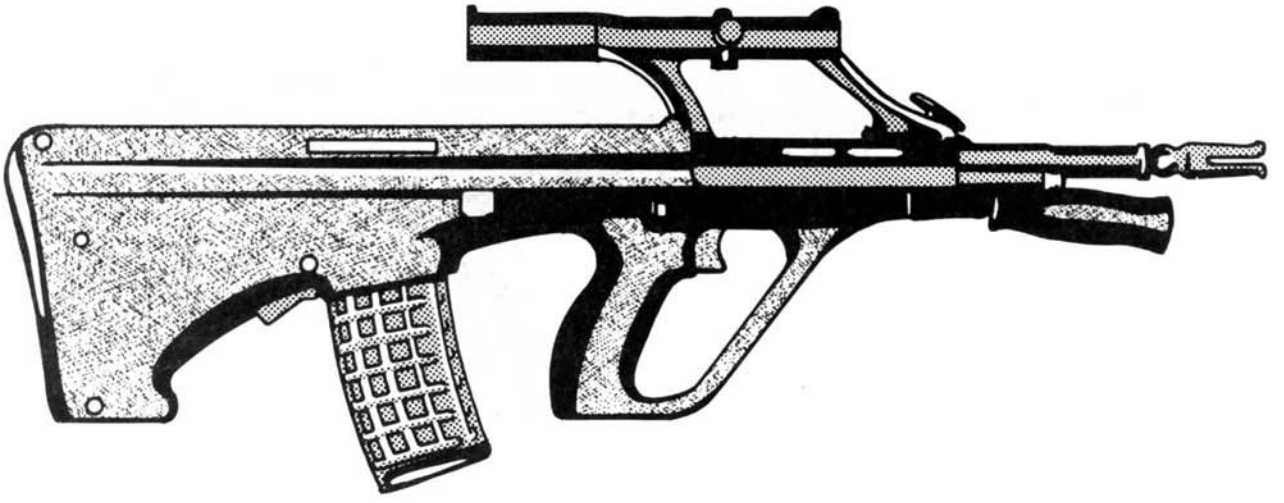

Steyr SSG-69

Steyr SSG-69 (Sniper Rifle): The SSG-69 (*Scharfschutzen Gewehr-69* or sharpshooter's rifle model 69) is an Austrian bolt-action sniper rifle, which is also sold for sporting purposes.

Ammo: 7.62mm N
Wt: 4.6 kg
Mag: 5 box or 10 box
Price: $450 (S/R)

						—Recoil—		
Weapon	*ROF*	*Dam*	*Pen*	*Blk*	*Mag*	*SS*	*Brst*	*Rng*
SSG-69	BA	4	2-3-Nil	6	5/10	4	—	75

All sniper rifles come with a scope. With the scope, add 15 meters to the basic range for *aimed* shots. If the scope is later damaged or lost (or for quick shots) this modifier is not added.

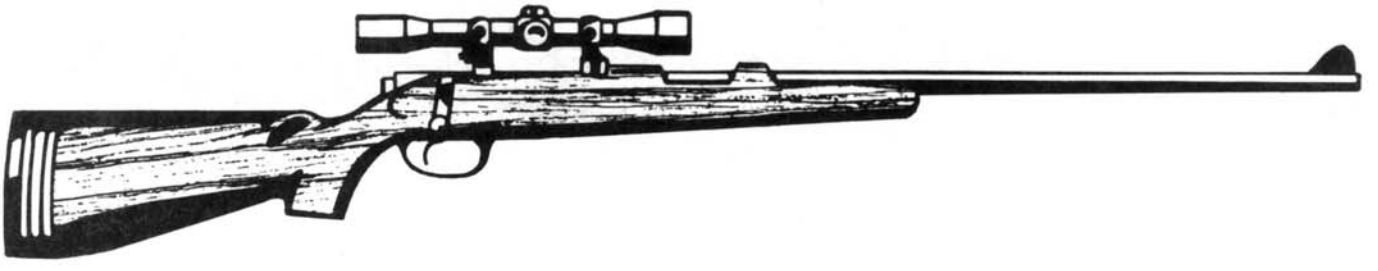

SVD

SVD (Sniper Rifle): The standard Eastern Bloc sniper rifle (except in Czech service), the SVD is a semiautomatic, clip-fed rifle with a telescopic sight.

Ammo: 7.62mm S
Wt: 4.6 kg
Mag: 10 box
Price: $500 (R/S)

						—Recoil—		
Weapon	*ROF*	*Dam*	*Pen*	*Blk*	*Mag*	*SS*	*Brst*	*Rng*
SVD	SA	4	2-3-Nil	6	10	4	—	75

All sniper rifles come with a scope. With the scope, add 15 meters to the basic range for *aimed* shots. If the scope is later damaged or lost (or for quick shots) this modifier is not added.

Type 64

Type 64 (Assault Rifle): This weapon is currently the standard assault rifle for the Japanese self-defense forces.

Ammo: 7.62mm N
Wt: 5 kg
Mag: 20 box
Price: $650 (R/—)

						—Recoil—		
Weapon	*ROF*	*Dam*	*Pen*	*Blk*	*Mag*	*SS*	*Brst*	*Rng*
Type 64	5	4	2-3-Nil	5	20	4	9	65

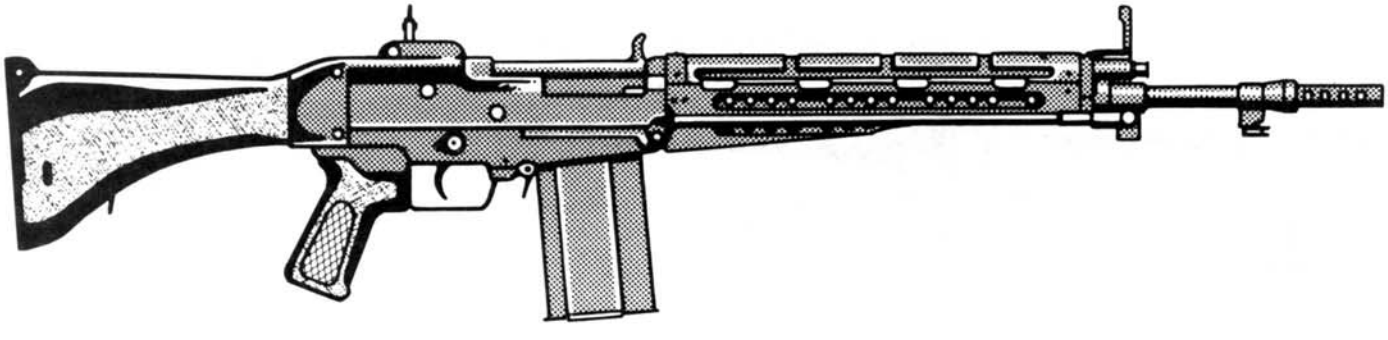

Valmet M71

Valmet M71 (Assault Rifle): This is a Finnish version of the AK series of assault rifles, notable for its bullpup configuration.

Ammo: 5.45mm B
Wt: 3.9 kg
Mag: 15 box or 30 box
Price: $450 (R/—)

						—Recoil—		
Weapon	*ROF*	*Dam*	*Pen*	*Blk*	*Mag*	*SS*	*Brst*	*Rng*
Valmet M71	SA	3	1-Nil	4	15/30	3	—	50

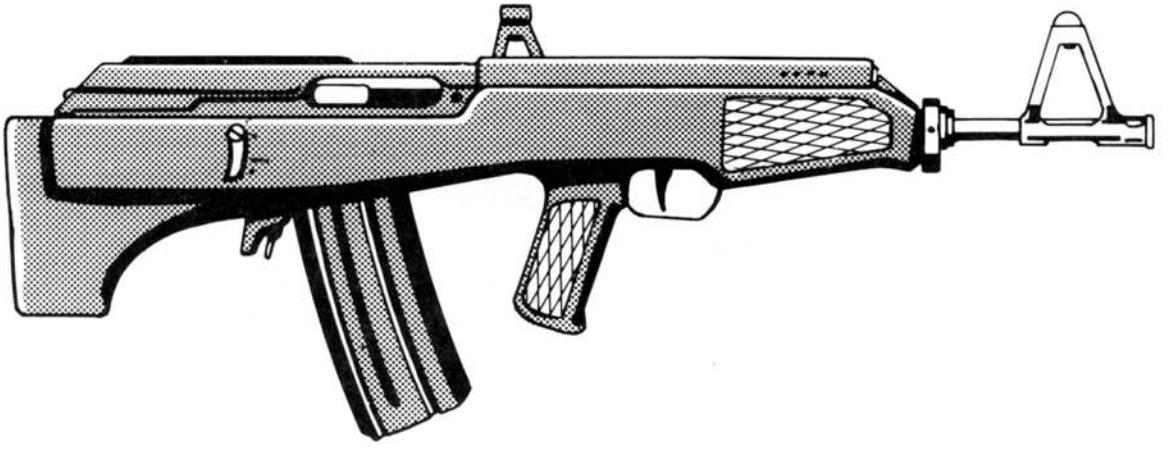

Vz-54

Vz-54 (Sniper Rifle): The standard Czech sniper rifle is a progressive development of the bolt-action Mauser (the German Army's WWII service rifle), fitted with a telescopic sight.

Ammo: 8mm M
Wt: 4.5 kg
Mag: 5 individual
Price: $300 (R/R)

						—Recoil—		
Weapon	*ROF*	*Dam*	*Pen*	*Blk*	*Mag*	*SS*	*Brst*	*Rng*
Vz-54	BA	4	2-3-Nil	5	5i	5	—	65

All sniper rifles come with a scope. With the scope, add 15 meters to the basic range for *aimed* shots. If the scope is later damaged or lost (or for quick shots) this modifier is not added.

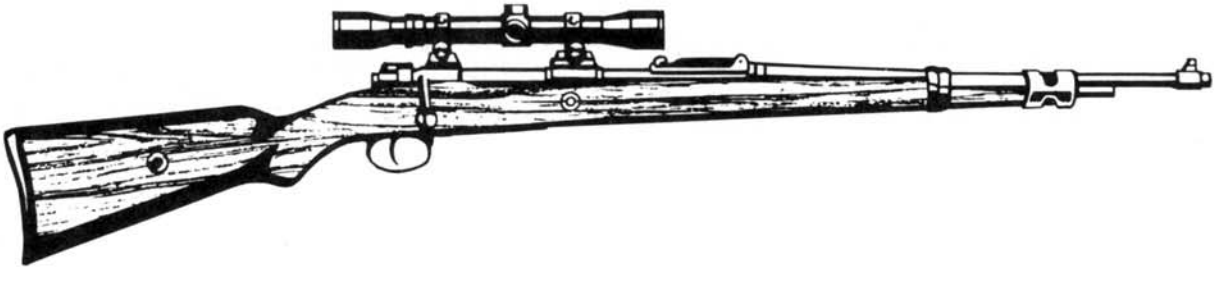

Vz-58V

Vz-58V (Assault Rifle): The Vz-58V is a Czech assault rifle manufactured for domestic service but also sold on the export market.

Ammo: 7.62mm S
Wt: 3.8 kg
Mag: 30 box
Price: $375 (S/C)

						—Recoil—		
Weapon	*ROF*	*Dam*	*Pen*	*Blk*	*Mag*	*SS*	*Brst*	*Rng*
Vz-58V	5	3	1-Nil	3/4	30	3	9	55

WA-2000

WA-2000 (Sniper Rifle): This is a German-built sniper rifle, originally designed for Olympic marksmanship competitions.

Ammo: .30 M
Wt: 8.3 kg
Mag: 6 box
Price: $2000 (R/—)

						—Recoil—		
Weapon	*ROF*	*Dam*	*Pen*	*Blk*	*Mag*	*SS*	*Brst*	*Rng*
WA-2000	SA	5	2-3-Nil	5	6	5	—	75

All sniper rifles come with a scope. With the scope, add 15 meters to the basic range for *aimed* shots. If the scope is later damaged or lost (or for quick shots) this modifier is not added.

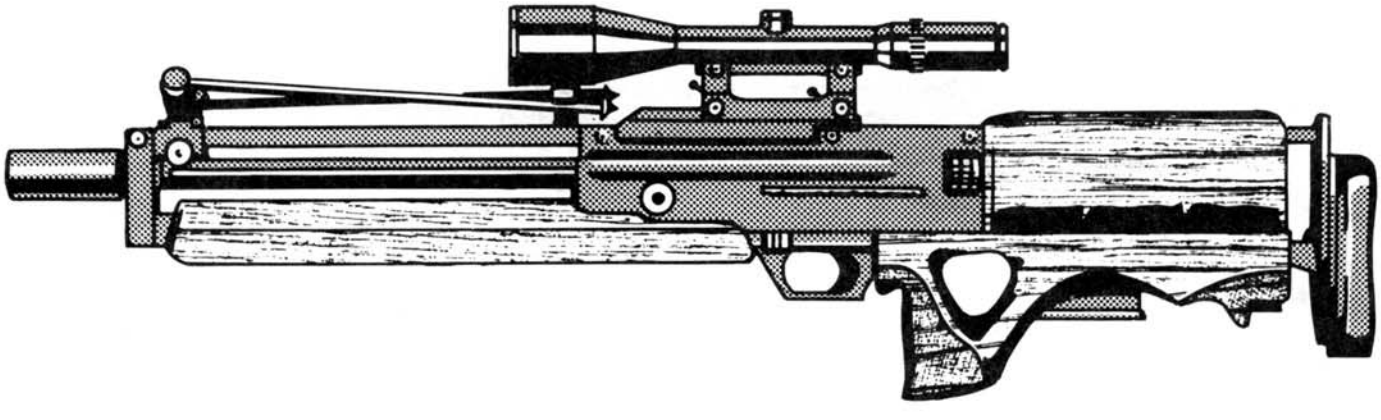

Winchester M70 African

Winchester M70 African (Sporting Rifle): The M70 is a large-bore hunting rifle designed for the largest game animals (a class of weapon commonly called "elephant guns").

Ammo: .458 WBM
Wt: 4 kg
Mag: 3 individual
Price: $475 (S/S)

						—Recoil—		
Weapon	*ROF*	*Dam*	*Pen*	*Blk*	*Mag*	*SS*	*Brst*	*Rng*
M70 African	BA	6	2-4-Nil	5i	3i	7	—	65

Winchester 1873

Winchester 1873 (Sporting Rifle): This is an American lever-action carbine that was the subject of a movie of the same name starring Jimmy Stewart. The rifle is a collectors' item in the US, but can still be found overseas as a hunting weapon. Modern cartridges are still made for it.

Ammo: .44-40
Wt: 4.4 kg
Mag: 15 individual
Price: $600 (S/R)

						—Recoil—		
Weapon	*ROF*	*Dam*	*Pen*	*Blk*	*Mag*	*SS*	*Brst*	*Rng*
1873	LA	2	1-Nil	5	15i	2	—	45

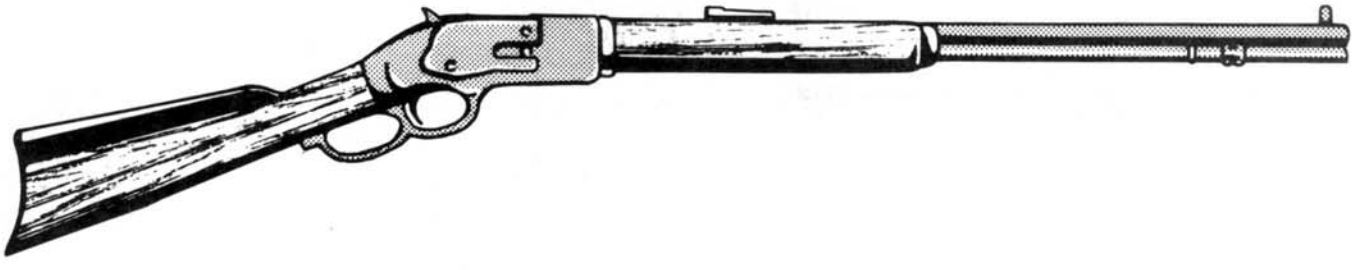

Winchester 1894

Winchester 1894 (Sporting Rifle): This rifle is a modernized version of the Winchester 1873. Improved versions are still used as hunting weapons in the US.

Ammo: .30-30
Wt: 3.1 kg
Mag: 6 individual
Price: $275 (C/R)

						—Recoil—		
Weapon	*ROF*	*Dam*	*Pen*	*Blk*	*Mag*	*SS*	*Brst*	*Rng*
1894	LA	3	2-Nil	5	6i	4	—	50

BAR M1918A2

BAR M1918A2 (Automatic Rifle): An American automatic rifle developed too late for front-line service on any large scale in WWI.

Ammo: .30-06
Wt: 9.5 kg
Mag: 20 box
Price: $875 (R/—)

						—Recoil—		
Weapon	*ROF*	*Dam*	*Pen*	*Blk*	*Mag*	*SS*	*Brst*	*Rng*
M1918A2	5	4	2-3-Nil	6	20	2	5	65
bipod	5	4	2-3-Nil	6	20	1	2	90

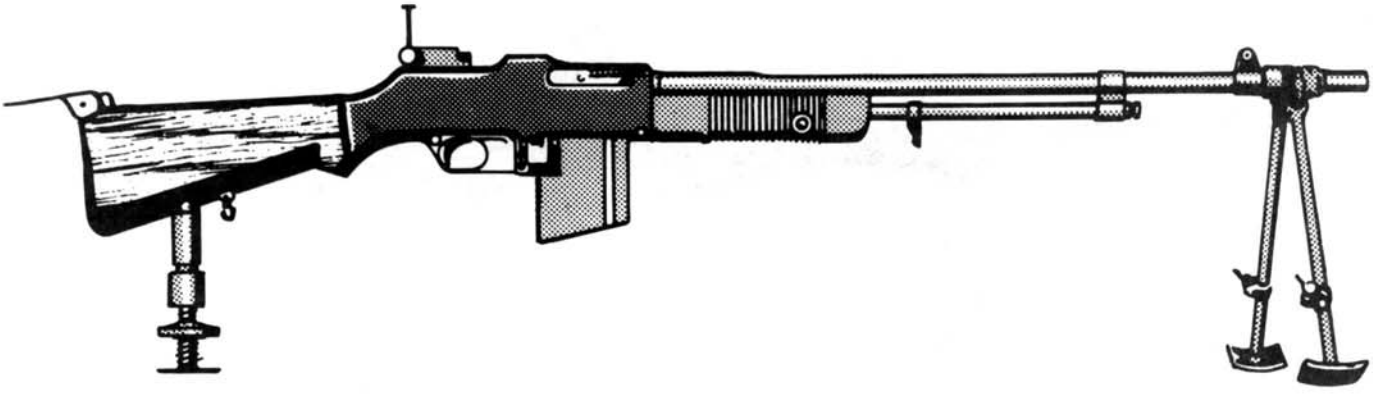

AAT-52

AAT-52 (Machinegun): The standard machinegun of the French military, the AAT-52 is equipped with a bipod and can be fired from a tripod (NLT). The weapon's blowback extraction system tends to rip cartridge cases in half when extracting them, leaving a ring of brass stuck in the barrel. French troops have learned to overcome this deficiency by greasing the cartridge cases. Troops unfamiliar with the AAT-52, however, will be unaware of this precaution, and once the weapon's ready supply of ammo has been used up, the weapon may jam. (Roll 1D10 each combat turn the weapon is fired. A roll of 1 indicates the weapon is jammed.) A jam requires one full combat turn to clear.

Ammo: 7.5mm MAS
Wt: 11 kg
Mag: 50 belt
Price: $400 (R/R)

						—Recoil—		
Weapon	*ROF*	*Dam*	*Pen*	*Blk*	*Mag*	*SS*	*Brst*	*Rng*
AAT-52	10	4	2-3-Nil	5	50B	1	7	65
bipod	10	4	2-3-Nil	5	50B	1	4	90
tripod	10	4	2-3-Nil	5	50B	1	2	125

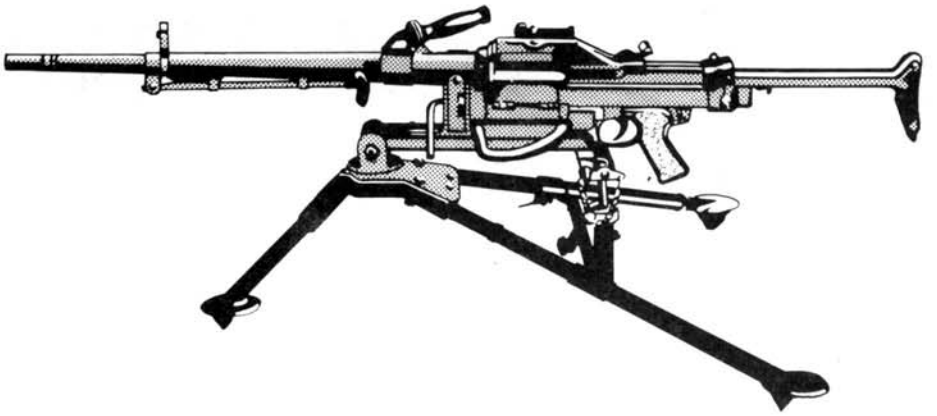

Bren L2A4

Bren L2A4 (Machinegun): A modern variation of the WWII Bren gun, chambered for a more modern round than its predecessor.

Ammo: 7.62mm N
Wt: 11.8 kg
Mag: 30 box
Price: $1200 (R/—)

						—Recoil—		
Weapon	*ROF*	*Dam*	*Pen*	*Blk*	*Mag*	*SS*	*Brst*	*Rng*
Bren L2A4	5	4	2-3-Nil	6	30	1	4	60
bipod	5	4	2-3-Nil	6	30	1	2	75

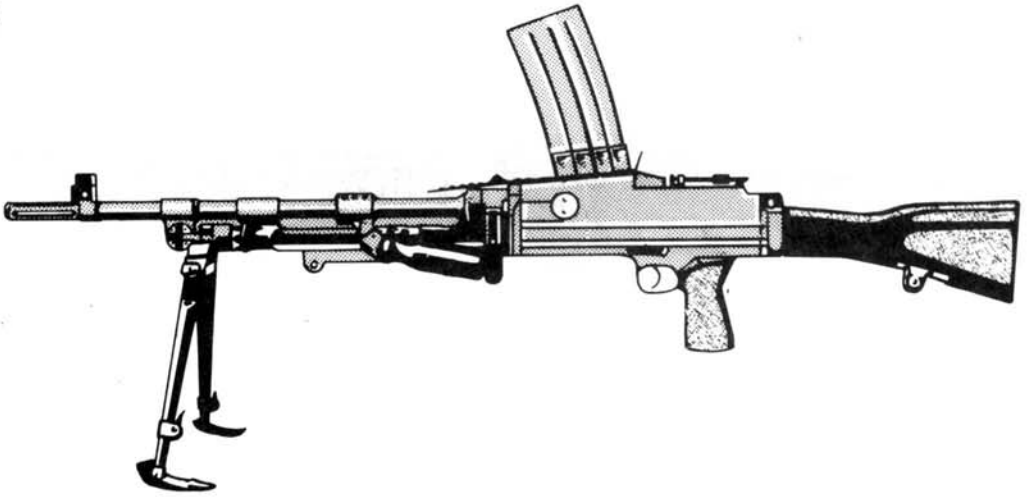

RPK

RPK (Automatic Rifle): The older version of the RPK series, this automatic rifle fires the 7.62mm fired by the AKM assault rifle. In addition to the standard magazines fired from the assault rifle, it also has a very long 75-round magazine. This weapon is usually found only in units also using the AKM.

Ammo: 7.62mm S
Wt: 5 kg
Mag: 30 box or 40 box or 75 box
Price: $1000 (S/C)

						—Recoil—		
Weapon	*ROF*	*Dam*	*Pen*	*Blk*	*Mag*	*SS*	*Brst*	*Rng*
RPK	10	3	2-Nil	5	30/40/75	1	6	60
bipod	10	3	2-Nil	5	30/40/75	1	3	75

RPK-74

RPK-74 (Automatic Rifle): The standard, Warsaw Pact, light automatic support weapon, the RPK-74 can accept either the same magazine as the AK-74 or an oversized magazine.

Ammo: 5.45mm B
Wt: 4.5 kg
Mag: 30 box or 40 box
Price: $1000 (S/C)

						—Recoil—		
Weapon	*ROF*	*Dam*	*Pen*	*Blk*	*Mag*	*SS*	*Brst*	*Rng*
RPK-74	10	2	1-Nil	5	30/40	1	6	50
bipod	10	2	1-Nil	5	30/40	1	3	75

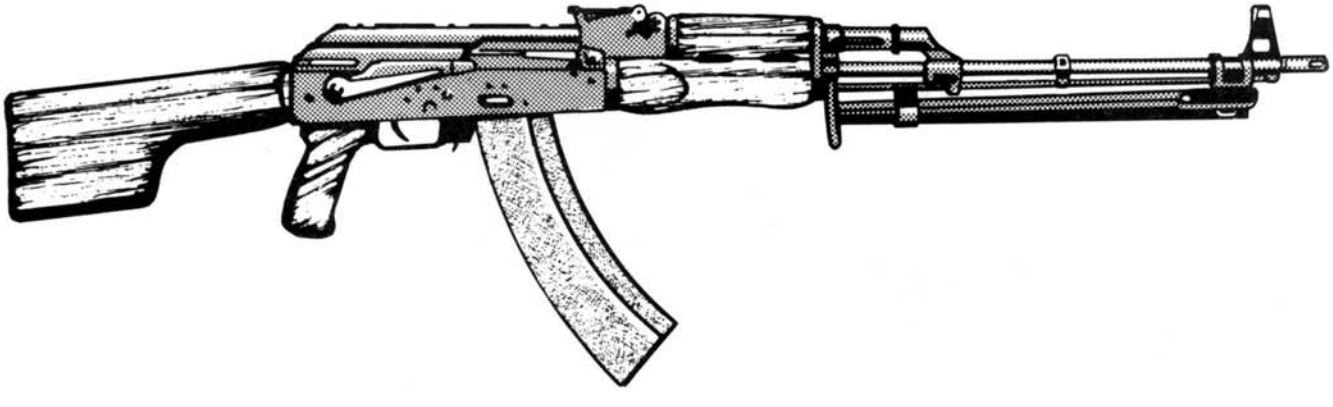

M249 SAW

M249 SAW (Automatic Rifle): The M249 Squad Automatic Weapon (SAW) is the standard US light automatic support weapon. It can accept either the standard 30-round magazine of the M16A2 or a 200-round belt. It is equipped with a bipod.

Ammo: 5.56 N
Wt: 7 kg
Mag: 30 or 200 belt
Price: $1500 (S/R)

						—Recoil—		
Weapon	*ROF*	*Dam*	*Pen*	*Blk*	*Mag*	*SS*	*Brst*	*Rng*
M249 SAW	10	2	1-Nil	5	30/200B	1	3	60
bipod	10	2	1-Nil	5	30/200B	1	3	75

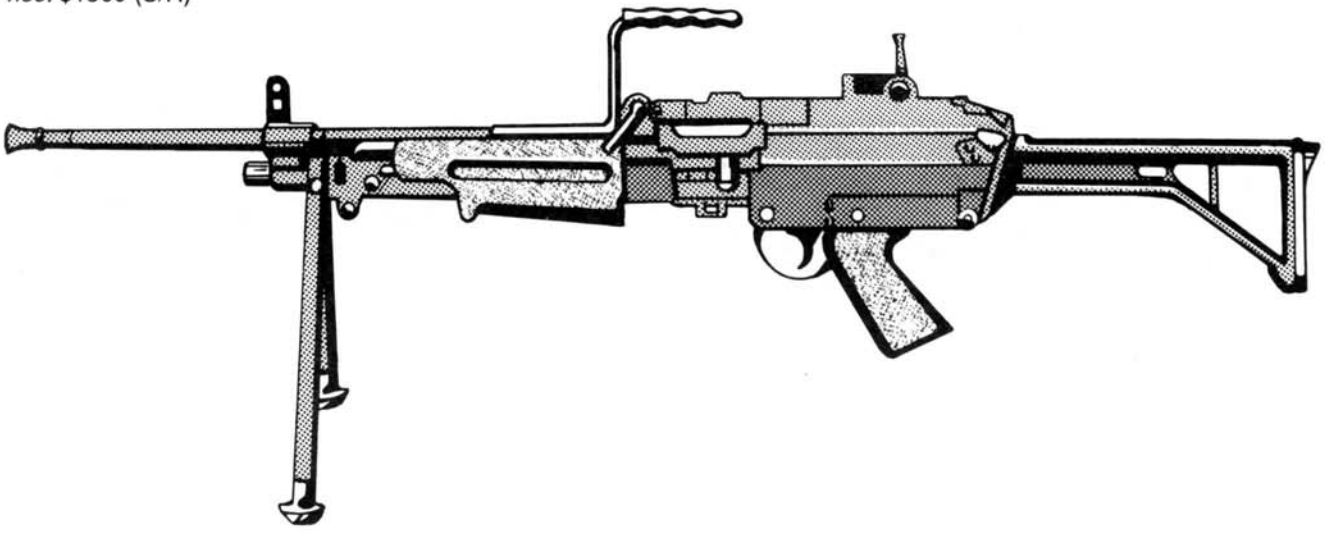

Colt M1895/1914

Colt M1895/1914 (Machinegun): This is the first truly automatic machinegun formally adopted for service by the US Army. It is now obsolete and is quite rare.

Ammo: .30-06
Wt: 50.6 kg (*Weapon Wt:* 22.8 kg *Tripod Wt:* 27.8 kg)
Mag: 250 belt
Price: $1800 (—/—)

						—Recoil—		
Weapon	*ROF*	*Dam*	*Pen*	*Blk*	*Mag*	*SS*	*Brst*	*Rng*
M1895/1914	5	4	2-3-Nil	5	250B	1	4	65
tripod	5	4	2-3-Nil	5	250B	1	2	125

DP

DP (Machinegun): A Soviet WWII-vintage machinegun used by China and Vietnam.

Ammo: 7.62mm L
Wt: 11.9 kg
Mag: 47 drum
Price: $850 (—/S)

						—Recoil—		
Weapon	*ROF*	*Dam*	*Pen*	*Blk*	*Mag*	*SS*	*Brst*	*Rng*
DP	5	4	2-3-Nil	6	47	1	4	65
bipod	5	4	2-3-Nil	6	47	1	2	90

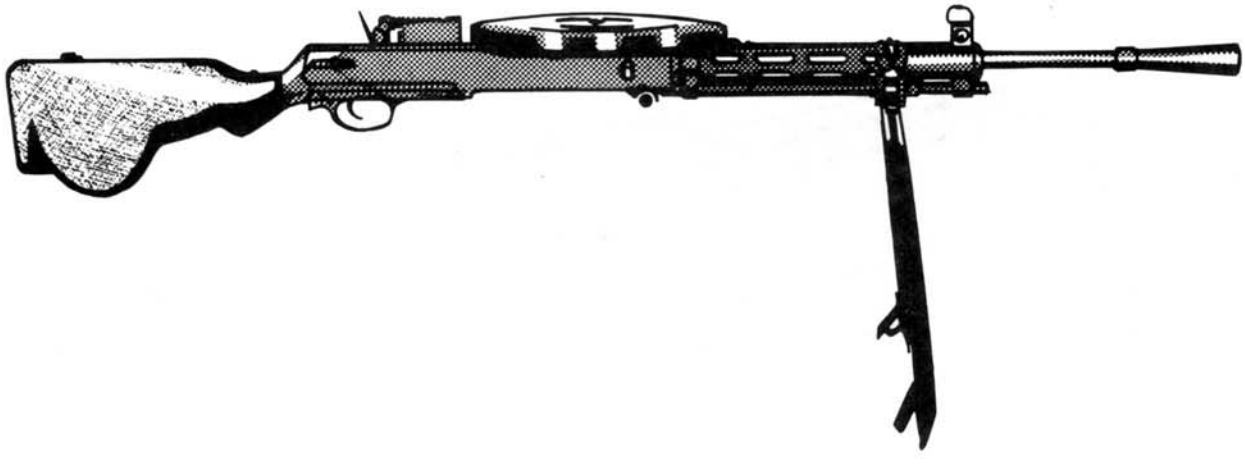

DShK

DShK (Machinegun): The standard heavy machinegun in use by Warsaw Pact nations. It is usually used on a vehicle mount, but can also be used on a wheeled carriage (PHC) which is treated as a tripod mount.

Ammo: 12.7mm B
Wt: 128 kg (*Weapon Wt:* 46.7 kg *Tripod Carriage Wt:* 81.3 kg)
Mag: 50 belt
Price: $2000 (C/V)

						—Recoil—		
Weapon	*ROF*	*Dam*	*Pen*	*Blk*	*Mag*	*SS*	*Brst*	*Rng*
DShK	5	9	2-2-3	8	50B	7	17	65
tripod	5	9	2-2-3	8	50B	3	8	150

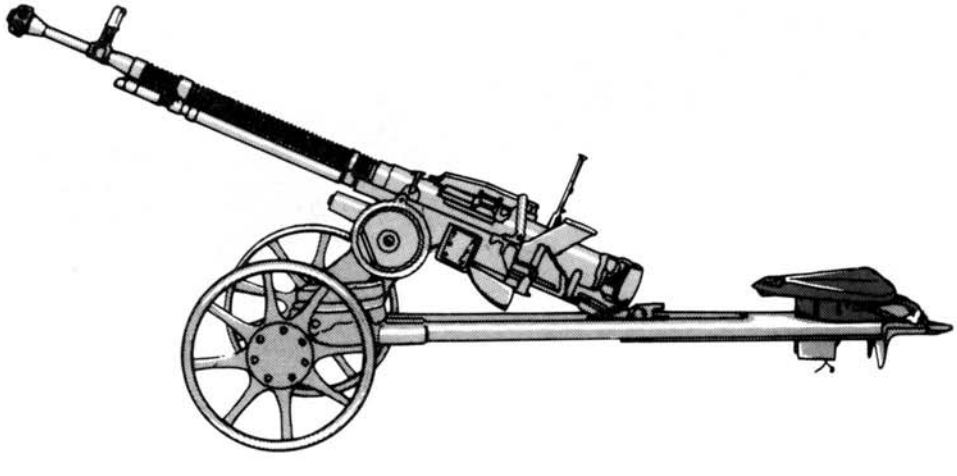

FMM 24/29

FMM 24/29 (Machinegun): A French 1930s-era machinegun, used during WWII and still found in service with some armies.

Ammo: 7.5mm MAS
Wt: 11 kg
Mag: 25 box
Price: $1100 (R/—)

						—Recoil—		
Weapon	*ROF*	*Dam*	*Pen*	*Blk*	*Mag*	*SS*	*Brst*	*Rng*
FMM 24/29	5	4	2-3-Nil	4	25	2	4	65
bipod	5	4	2-3-Nil	4	25	1	2	90

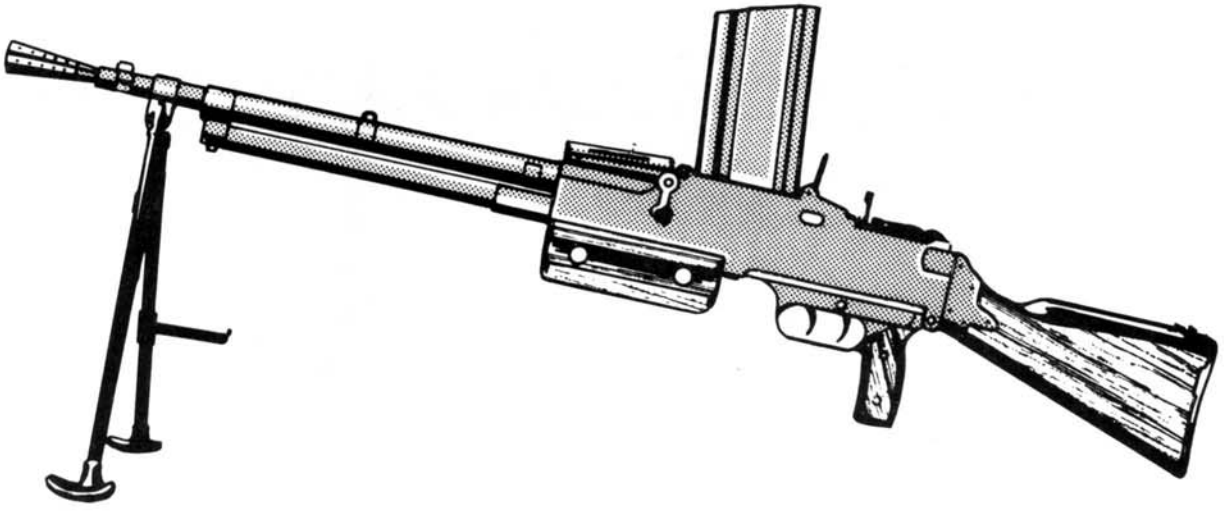

HK-21

HK-21 (Machinegun): A German machinegun manufactured for the export market and for domestic use.

Ammo: 7.62mm N
Wt: 12.5 kg
Mag: 50 belt
Price: $1200 (S/R)

						—Recoil—		
Weapon	*ROF*	*Dam*	*Pen*	*Blk*	*Mag*	*SS*	*Brst*	*Rng*
HK-21	5	4	2-3-Nil	6	50B	1	4	65
bipod	5	4	2-3-Nil	6	50B	1	2	90
tripod	5	4	2-3-Nil	6	50B	1	1	125

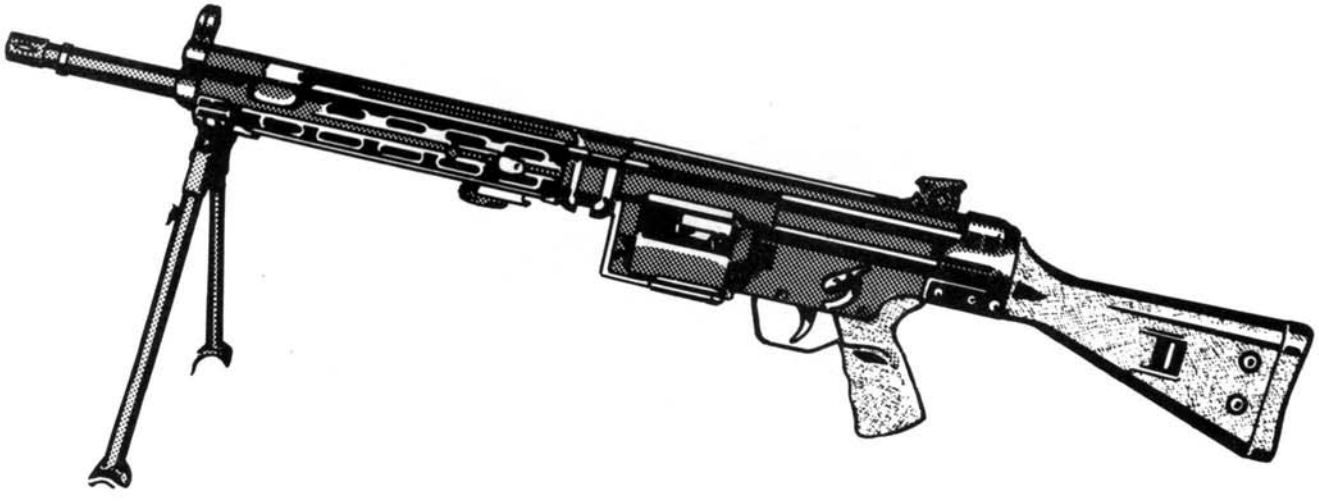

KPV

KPV (Machinegun): The KPV is the largest-caliber conventional machinegun in service and is virtually a small cannon. It fires a round originally developed for the Soviet RTRS-41 antitank rifle in WWII and is found mounted only on vehicles. It accepts 100-round belts.

Ammo: 14.5mm B
Wt: 50 kg
Mag: 100 belt
Price: $3000 (S/C)

						—Recoil—		
Weapon	*ROF*	*Dam*	*Pen*	*Blk*	*Mag*	*SS*	*Brst*	*Rng*
KPV	5	12	2-2-3	10	100B	*	*	150

*The KPV is always mounted in a vehicle or on a field carriage and has negligible recoil.

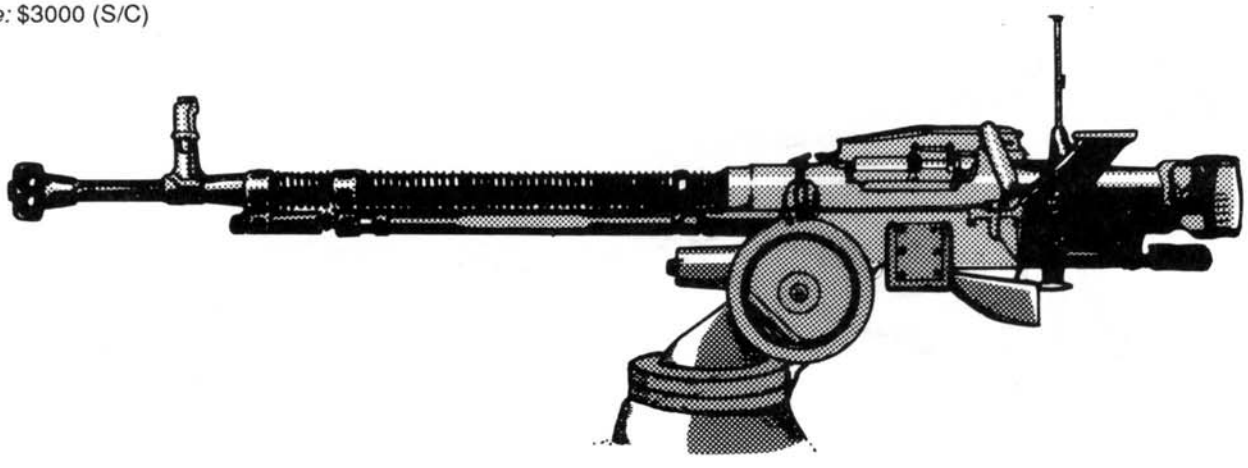

L86A1 LSW

L86A1 LSW (Machinegun): The heavy-barreled support version of the L85, the L86A1 uses either 100-round belts or the same magazines as the L85. It is equipped with a bipod.

Ammo: 5.56mm N
Wt: 4.5 kg
Mag: 30 box or 100 belt
Price: $1500 (R/R)

						—Recoil—		
Weapon	*ROF*	*Dam*	*Pen*	*Blk*	*Mag*	*SS*	*Brst*	*Rng*
L86A1 LSW	10	3	1-Nil	5	30/100B	2	11	50
bipod	10	3	1-Nil	5	30/100B	1	6	65

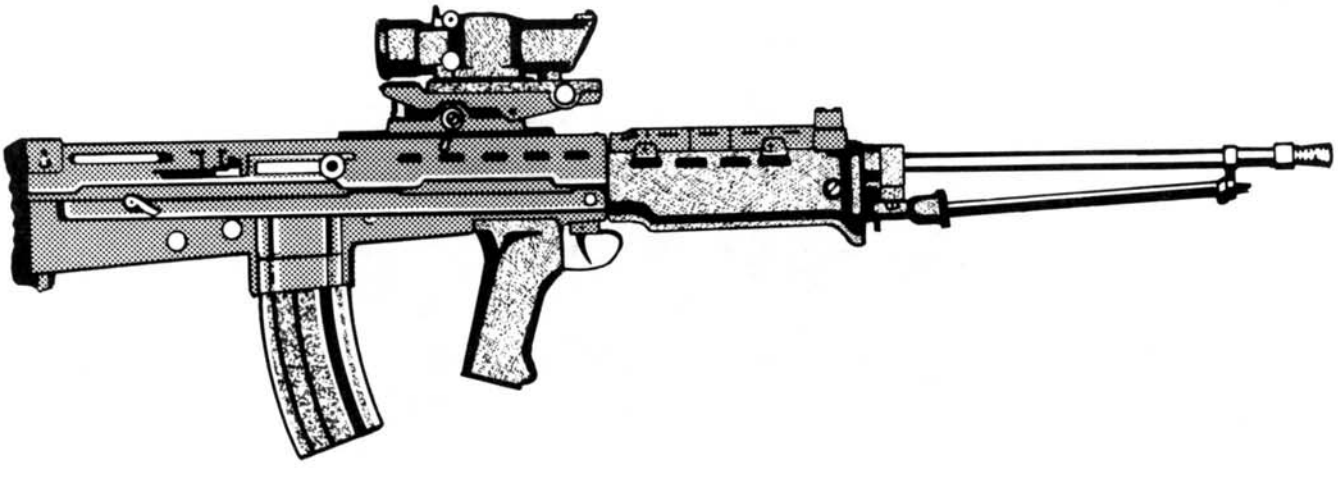

Lewis Mk I

Lewis Mk I (Machinegun): The Lewis gun is a WWI-vintage, air-cooled machinegun modified for service in WWII. The weapon is most notable for the horizontal drum mounted on the top of the weapon.

Ammo: .303
Wt: 14 kg
Mag: 47 drum
Price: $1200 (S/R)

						—Recoil—		
Weapon	*ROF*	*Dam*	*Pen*	*Blk*	*Mag*	*SS*	*Brst*	*Rng*
Lewis Mk I	5	4	2-Nil	6	47	1	3	60
bipod	5	4	2-Nil	6	47	1	2	75

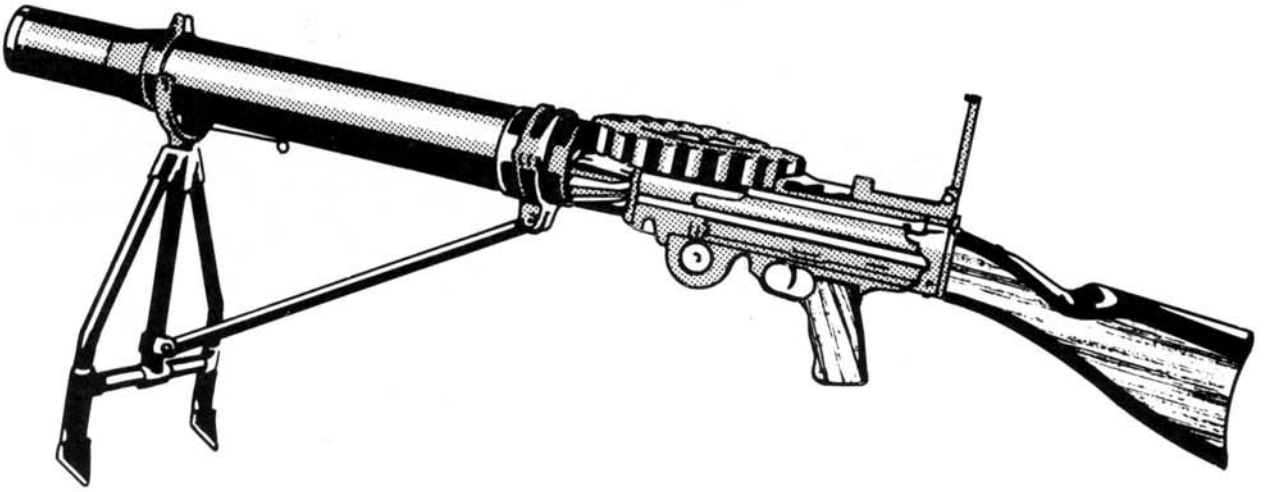

M214 6-Pac

M214 6-Pac (Machinegun): The M214 is a six-barreled Gatling gun, fed by a 1000-round drum. When the ROF is set at 5, the weapon can be fired without a tripod.

Ammo: 5.56mm N
Wt: 12.3 kg (*Tripod Wt:* 26.3 kg)
Mag: 1000 drum
Price: $10,000 (R/R)

						—Recoil—		
Weapon	*ROF*	*Dam*	*Pen*	*Blk*	*Mag*	*SS*	*Brst*	*Rng*
M214 6-Pac	5	3	1-Nil	4	1000	1	5	60
tripod	50	3	1-Nil	4	1000	1	5	90

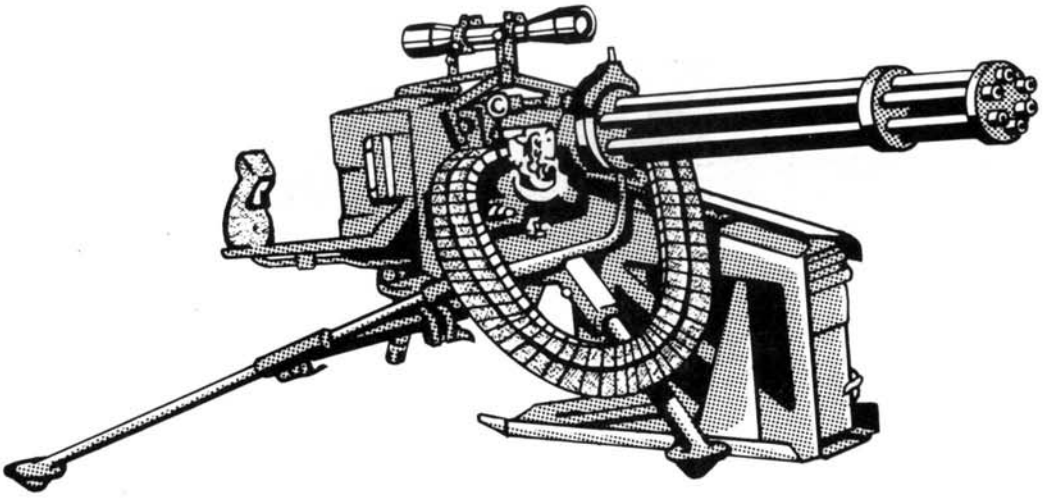

M2HB

M2HB (Machinegun): The M2 Heavy Barrel is the standard heavy machinegun of every western European army. It accepts 105-round belts and may be fired only from a tripod (NHT) or from a vehicle mount.

Ammo: .50 BMG
Wt: 51.2 kg (*Tripod Wt:* 19.3)
Mag: 105 belt
Price: $1600 (V/C)

						—Recoil—		
Weapon	*ROF*	*Dam*	*Pen*	*Blk*	*Mag*	*SS*	*Brst*	*Rng*
M2HB	5	8	2-2-3*	8	105B	3	14	65
tripod	5	8	2-2-3*	8	105B	2	7	150

*.50 SLAP ammunition has a penetration value of 1-1-2.

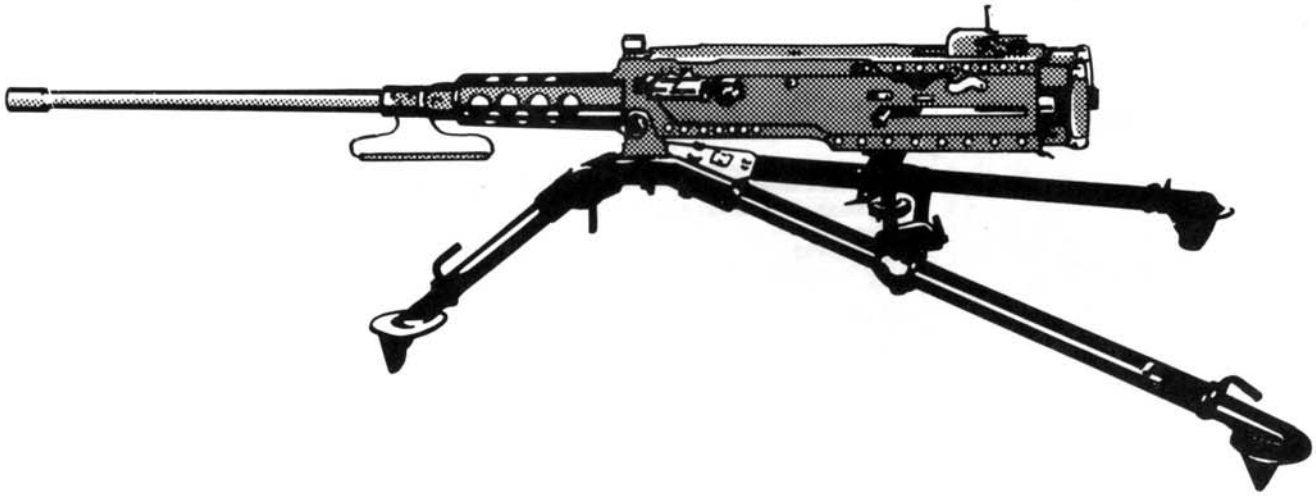

M60

M60 (Machinegun): The standard US general-purpose machinegun, a development of the WWII German MG42. It is equipped with a bipod and can also be fired from a tripod (NLT). It accepts 100-round belts.

Ammo: 7.62mm N
Wt: 10 kg
Mag: 100 belt
Price: $1500 (S/R)

						—Recoil—		
Weapon	*ROF*	*Dam*	*Pen*	*Blk*	*Mag*	*SS*	*Brst*	*Rng*
M60	5	4	2-3-Nil	6	100B	1	4	65
bipod	5	4	2-3-Nil	6	100B	1	2	90
tripod	5	4	2-3-Nil	6	100B	1	1	125

M134 Minigun

M134 Minigun (Machinegun): Originally developed as a helicopter armament, the weapon was mounted on a tripod (NHT) as a field expedient and is still used in this way on occasion.

Ammo: 7.62mm N
Wt: 24 kg
Mag: 15 linked 100-round belts
Price: $2400 (S/—)

						—Recoil—		
Weapon	*ROF*	*Dam*	*Pen*	*Blk*	*Mag*	*SS*	*Brst*	*Rng*
M134	100	4	2-3-Nil	4	1500B	*	*	90

*The M134 is always mounted in a vehicle or on a tripod, and has negligible recoil.

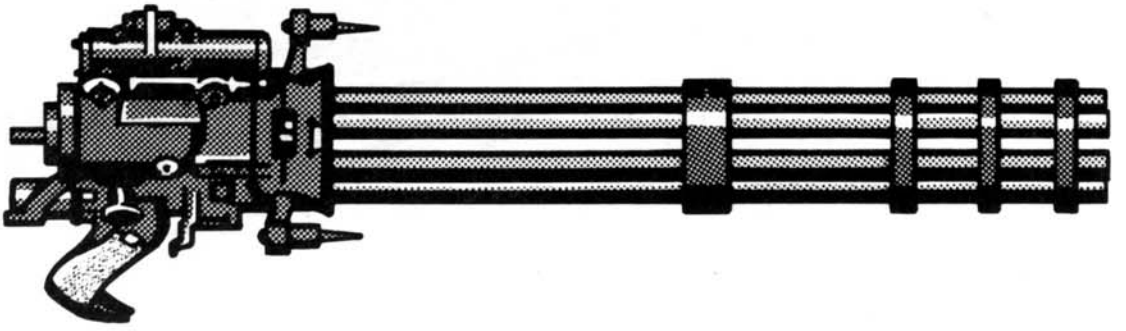

Browning M1919A4

Browning M1919A4 (Machinegun): A lighter, air-cooled version of the Browning M1917A1 machinegun.

Ammo: .30-06
Wt: 48.2 kg (*Weapon Wt:* 21.9 kg *Tripod Wt:* 26.3 kg)
Mag: 250 belt
Price: $1200 (S/R)

						—Recoil—		
Weapon	*ROF*	*Dam*	*Pen*	*Blk*	*Mag*	*SS*	*Brst*	*Rng*
M1919A4	5	4	2-3-Nil	5	250B	1	4	65
tripod	5	4	2-3-Nil	5	250B	1	2	100

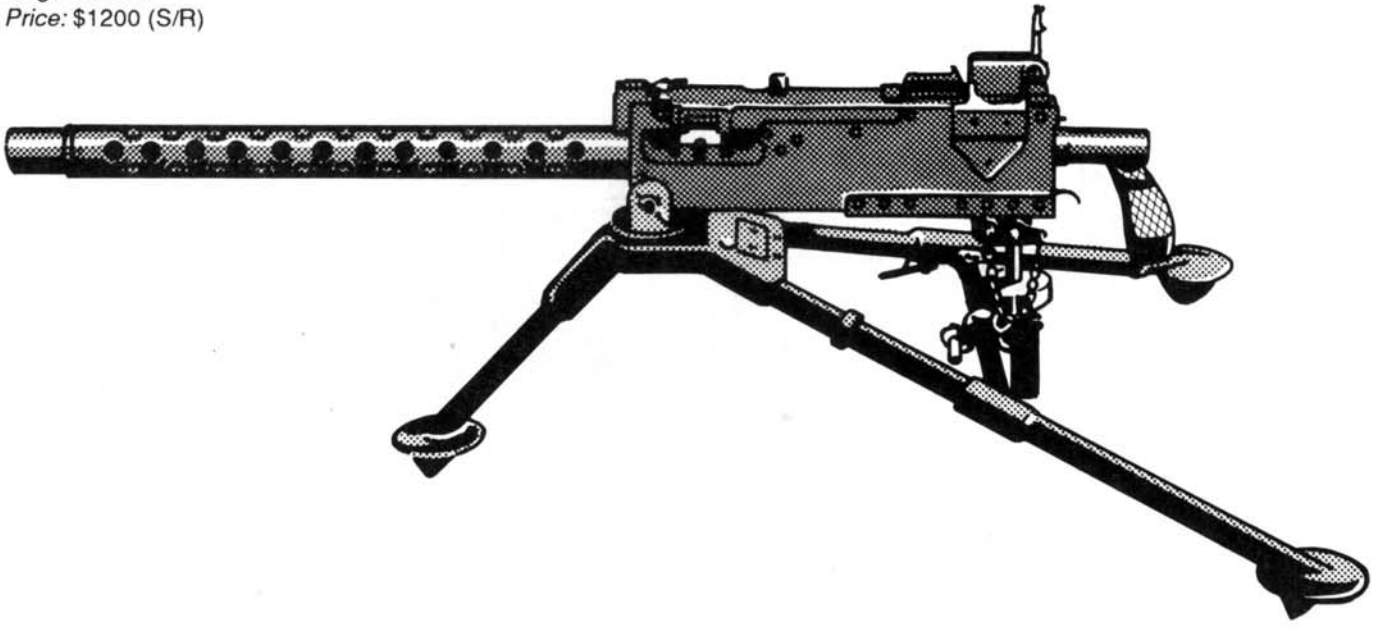

MAG
(MAG-58, L7A2 GPMG)

MAG (Machinegun): This weapon (also known as the MAG-58 and as the L7A2 GPMG in British service) is the standard general-purpose machinegun of the Belgian and British armies (as well as others) and is often used as a coaxial MG in US vehicles. It is equipped with a bipod and can also be fired from a tripod (NMT). It accepts 100-round belts.

Ammo: 7.62mm N
Wt: 12 kg
Mag: 100 belt
Price: $1500 (S/R)

						—Recoil—		
Weapon	*ROF*	*Dam*	*Pen*	*Blk*	*Mag*	*SS*	*Brst*	*Rng*
MAG	10	4	2-3-Nil	6	100B	1	7	65
bipod	10	4	2-3-Nil	6	100B	1	4	90
tripod	10	4	2-3-Nil	6	100B	1	2	125

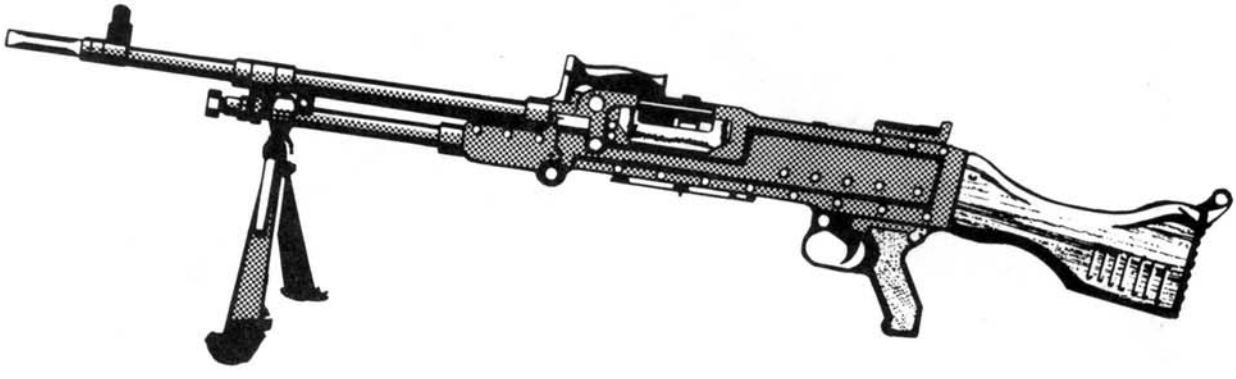

MG-3

MG-3 (Machinegun): The standard German light machinegun.

Ammo: 7.62mm N
Wt: 12 kg
Mag: 50 belt
Price: $1200 (S/R)

						—Recoil—		
Weapon	*ROF*	*Dam*	*Pen*	*Blk*	*Mag*	*SS*	*Brst*	*Rng*
MG-3	10	4	2-3-Nil	6	50B	1	7	65
bipod	10	4	2-3-Nil	6	50B	1	3	90
tripod	10	4	2-3-Nil	6	50B	1	1	125

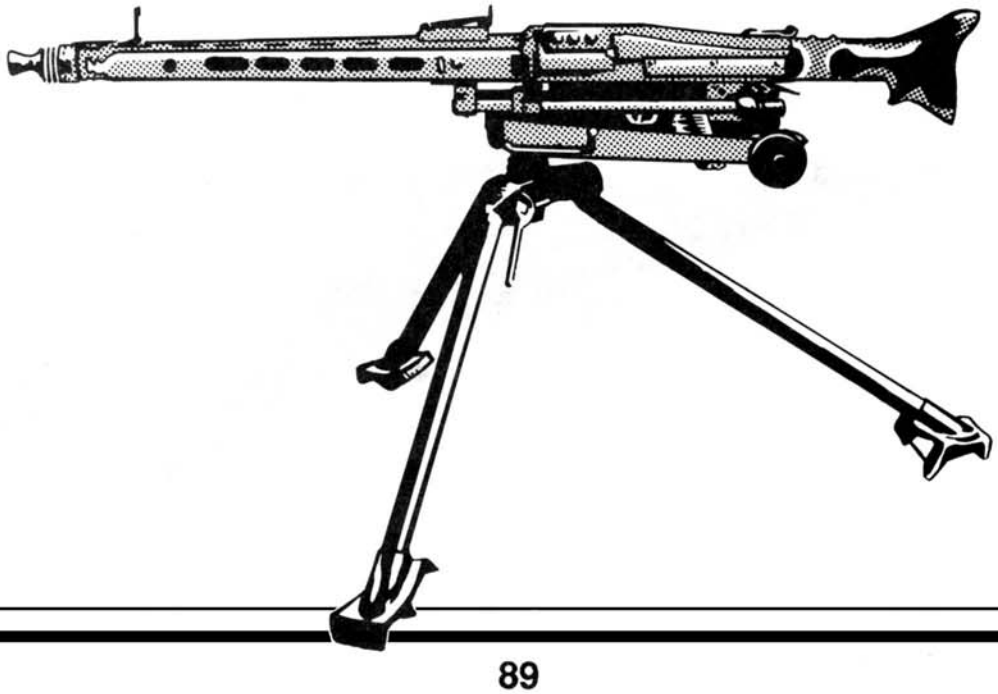

MG-08

MG-08 (Machinegun): A German, WWI-vintage, water-cooled machinegun, the MG-08 was the first fully automatic machinegun to be issued on a large scale to any army.

Ammo: 8mm M
Wt: 33.1 kg (*Tripod Wt:* 33 kg)
Mag: 250 belt
Price: $1800 (—/—)

						—Recoil—		
Weapon	*ROF*	*Dam*	*Pen*	*Blk*	*Mag*	*SS*	*Brst*	*Rng*
MG-08	5	4	2-3-Nil	6	250B	1	2	65
tripod	5	4	2-3-Nil	6	250B	1	1	135

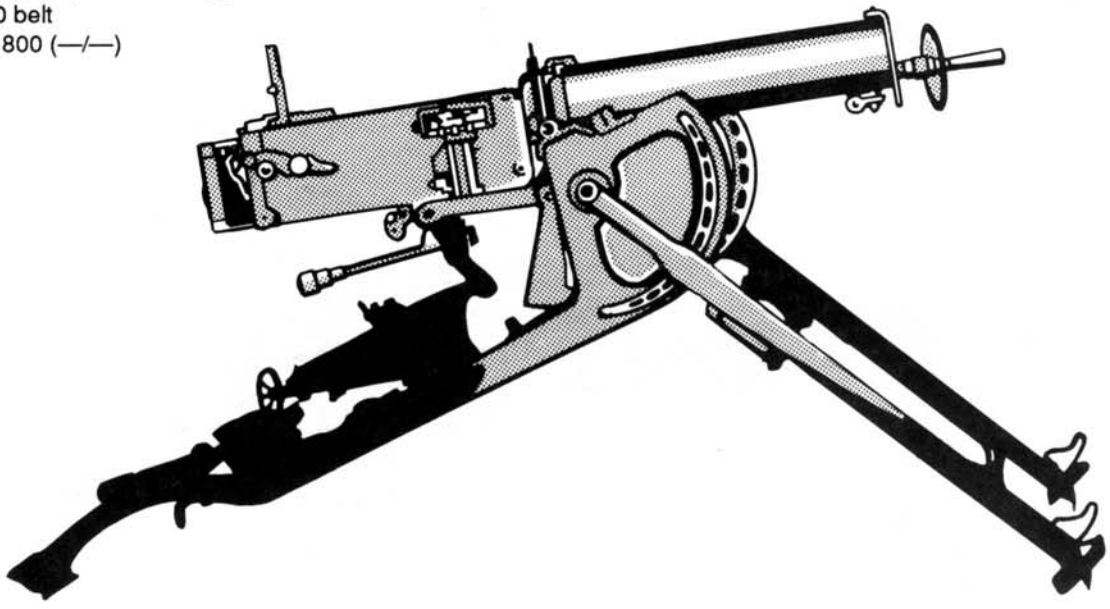

MG-34

MG-34 (Machinegun): The standard WWI German machinegun, the MG-34 is still available on the world arms market.

Ammo: 8mm M
Wt: 12.3 kg (*Tripod Wt:* 19 kg)
Mag: 50 belt
Price: $1400 (S/R)

						—Recoil—		
Weapon	*ROF*	*Dam*	*Pen*	*Blk*	*Mag*	*SS*	*Brst*	*Rng*
MG-34	10	4	2-3-Nil	6	50B	1	7	65
bipod	10	4	2-3-Nil	6	50B	1	4	90
tripod	10	4	2-3-Nil	6	50B	1	2	125

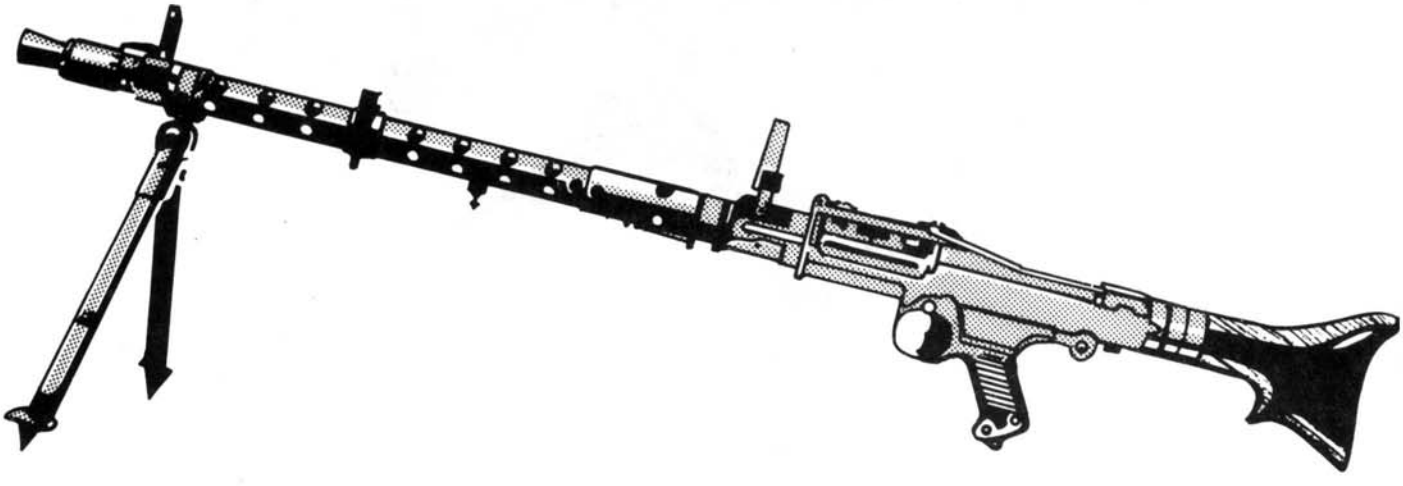

MG-42

MG-42 (Machinegun): An improved WWI German machinegun, the MG-42 served as the basis for many modern designs, including the US M60.

Ammo: 8mm M
Wt: 12 kg (*Tripod Wt:* 19 kg)
Mag: 50 belt
Price: $1400 (S/R)

						—Recoil—		
Weapon	*ROF*	*Dam*	*Pen*	*Blk*	*Mag*	*SS*	*Brst*	*Rng*
MG-42	10	4	2-3-Nil	6	50B	2	8	65
bipod	10	4	2-3-Nil	6	50B	1	4	90
tripod	10	4	2-3-Nil	6	50B	1	2	125

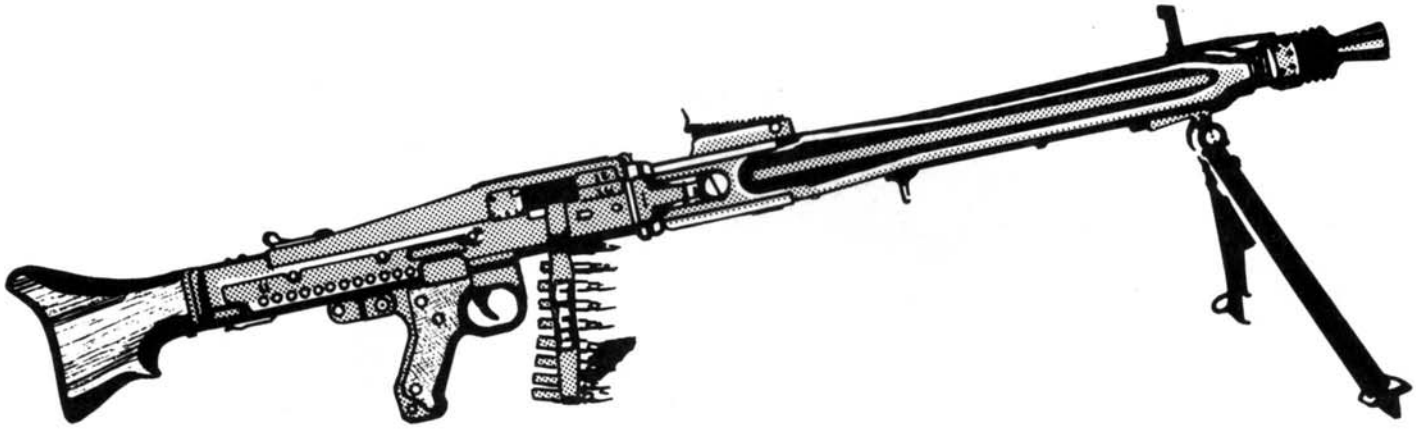

PK

PK (Machinegun): The standard Warsaw Pact medium machinegun, the PK MG is usually found mounted on a vehicle. It is equipped with a bipod and can also be fired from a tripod (PLT).

Ammo: 7.62mm L
Wt: 10 kg
Mag: 50 belt
Price: $2000 (R/S)

						—Recoil—		
Weapon	*ROF*	*Dam*	*Pen*	*Blk*	*Mag*	*SS*	*Brst*	*Rng*
PK	5	4	2-3-Nil	6	50B	2	5	65
bipod	5	4	2-3-Nil	6	50B	1	2	90
tripod	5	4	2-3-Nil	6	50B	1	1	125

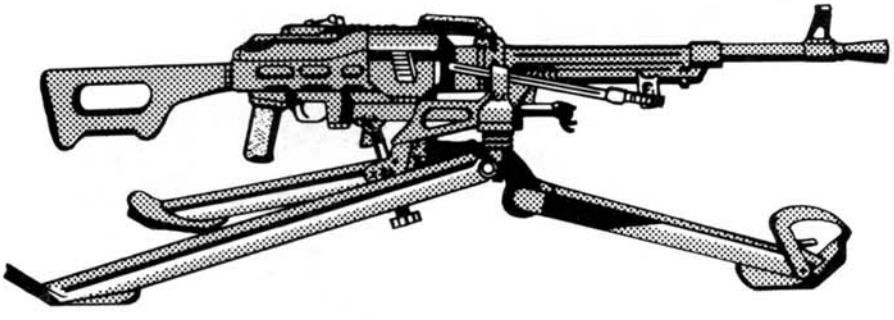

PKM

PKM (Machinegun): This is the field version of the PK machinegun, usually used on a bipod or tripod mount rather than a vehicle.

Ammo: 7.62mm L
Wt: 10 kg
Mag: 50 belt
Price: $2000 (R/S)

						—Recoil—		
Weapon	*ROF*	*Dam*	*Pen*	*Blk*	*Mag*	*SS*	*Brst*	*Rng*
PKM	5	4	2-3-Nil	6	50B	2	5	65
bipod	5	4	2-3-Nil	6	50B	1	2	90
tripod	5	4	2-3-Nil	6	50B	1	1	125

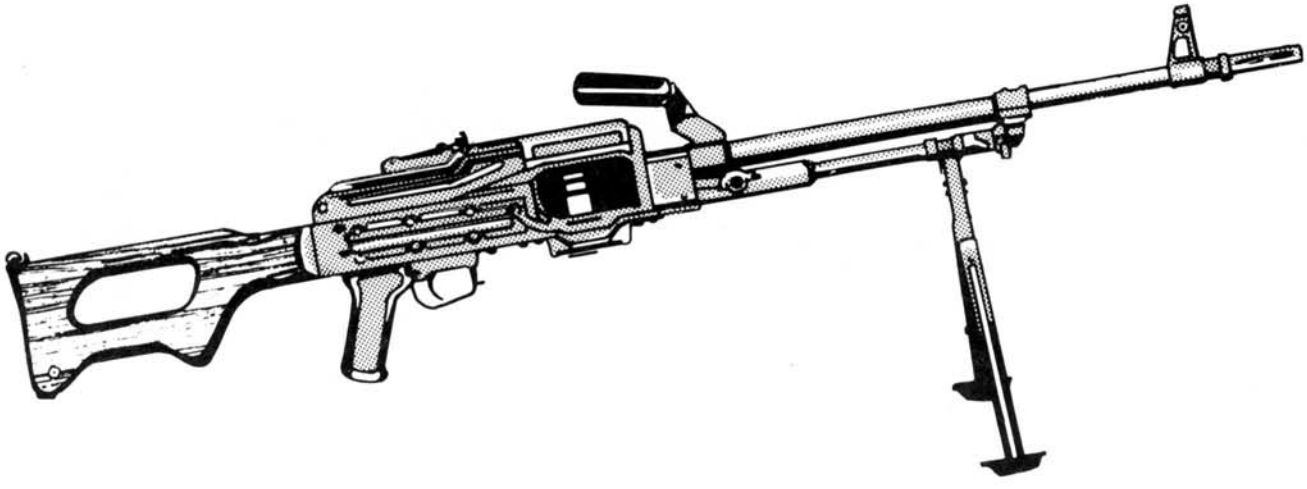

RPD

RPD (Machinegun): The RPD is the first Soviet machinegun to use the 7.62mm S round. It is obsolete and is now found chiefly in service with Third World armies.

Ammo: 7.62mm S
Wt: 9 kg
Mag: 100 belt
Price: $1000 (R/S)

						—Recoil—		
Weapon	*ROF*	*Dam*	*Pen*	*Blk*	*Mag*	*SS*	*Brst*	*Rng*
RPD	10	3	2-Nil	5	100B	1	4	60
bipod	10	3	2-Nil	5	100B	1	2	75

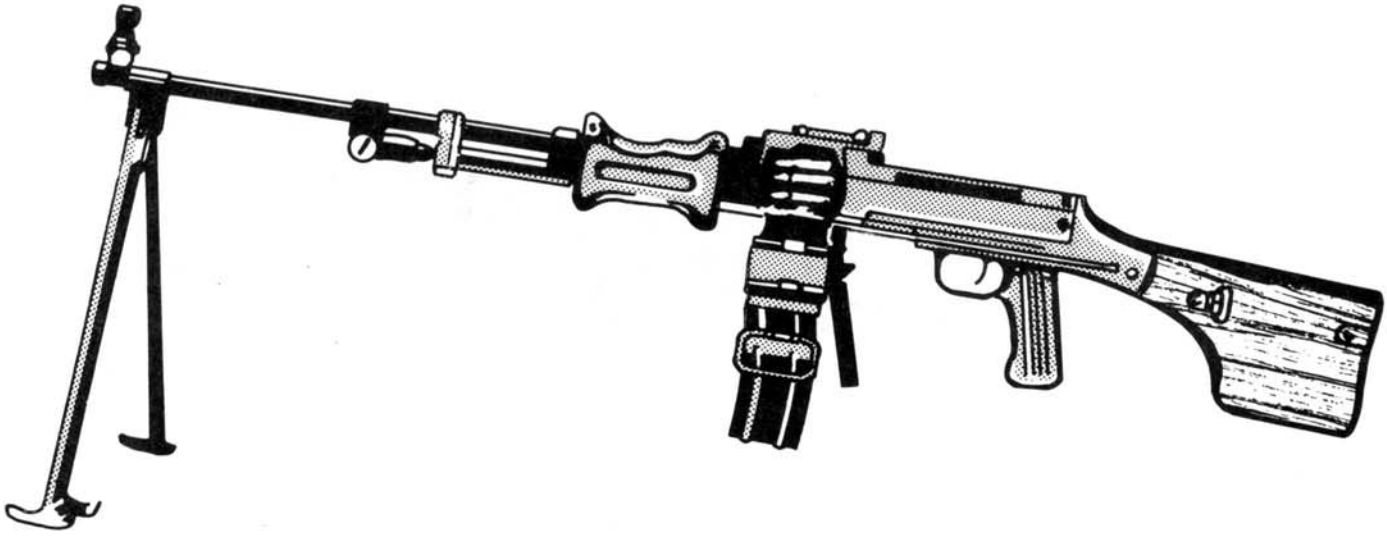

Bren Mk II

Bren Mk II (Machinegun): British WWII-era light machinegun.

Ammo: .303
Wt: 11.8 kg
Mag: 30 box
Price: $1100 (R/—)

						—Recoil—		
Weapon	*ROF*	*Dam*	*Pen*	*Blk*	*Mag*	*SS*	*Brst*	*Rng*
Bren Mk II	5	4	2-Nil	6	30	2	4	60
bipod	5	4	2-Nil	6	30	1	2	75

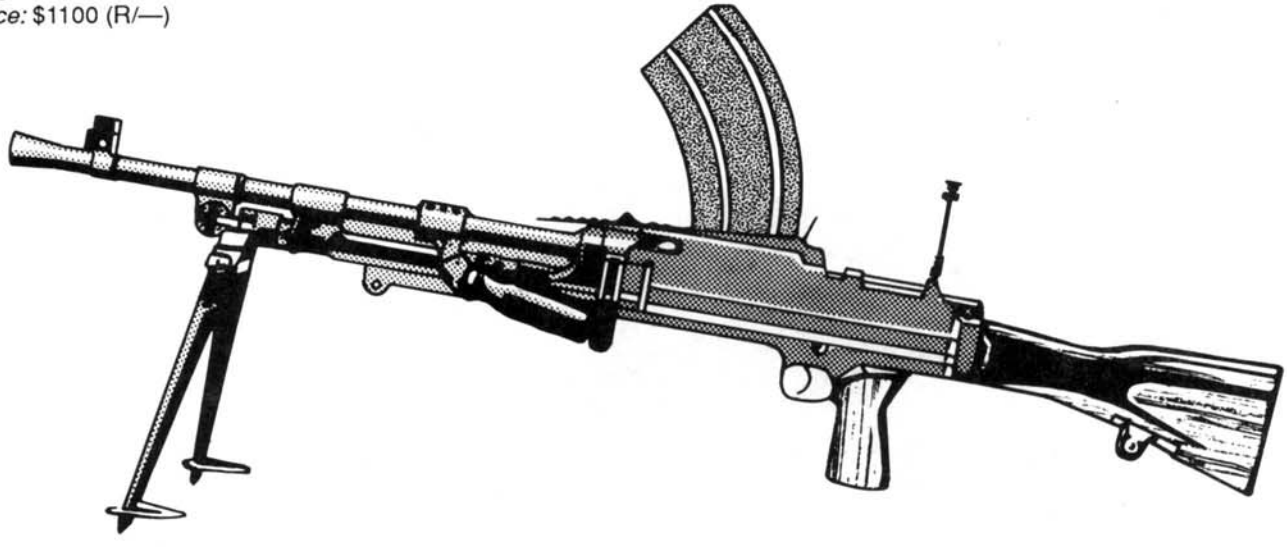

Browning M1917A1

Browning M1917A1 (Machinegun): This is a water-cooled machinegun developed in WWI but used in improved versions throughout WWII as well.

Ammo: .30-06
Wt: 49.5 kg (*Weapon Wt:* 24.5 kg *Tripod Wt:* 25 kg)
Mag: 250 belt
Price: $1300 (S/R)

						—Recoil—		
Weapon	*ROF*	*Dam*	*Pen*	*Blk*	*Mag*	*SS*	*Brst*	*Rng*
M1917A1	5	4	2-3-Nil	5	250B	1	2	65
tripod	5	4	2-3-Nil	5	250B	1	1	150

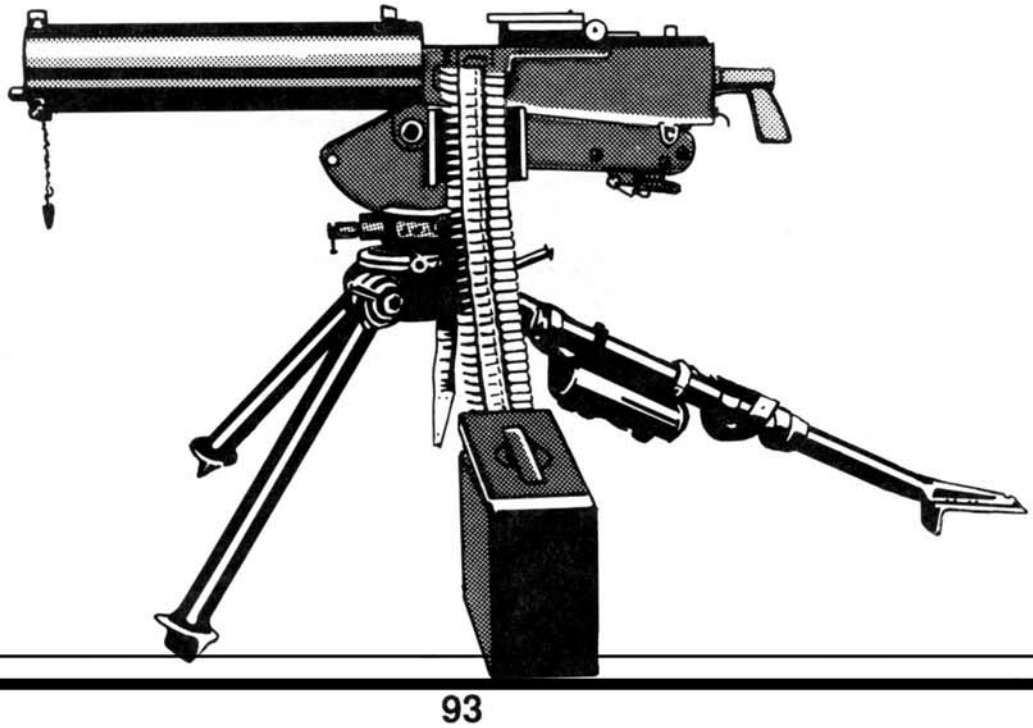

SG-43

SG-43 (Machinegun): An obsolete, Soviet, WWII-vintage machinegun.

Ammo: 7.62mm B
Wt: 22.7 kg (*Tripod Wt:* 13.8 kg)
Mag: 100 belt
Price: $1100 (R/S)

						—Recoil—		
Weapon	*ROF*	*Dam*	*Pen*	*Blk*	*Mag*	*SS*	*Brst*	*Rng*
SG-43	5	3	2-3-Nil	6	100B	1	4	65
tripod	5	3	2-3-Nil	6	100B	1	4	125

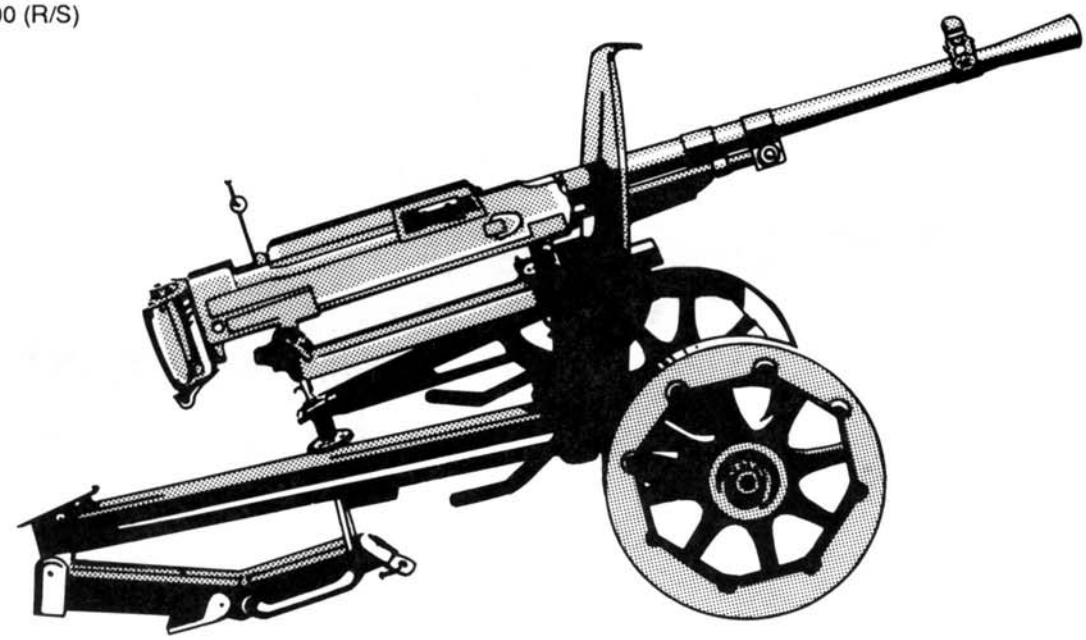

Stoner LMG

Stoner LMG (Machinegun): A light machinegun assembled from the Stoner 63 system.

Ammo: 5.56mm N
Wt: 5.6 kg
Mag: 30 box
Price: $650 (R/—)

						—Recoil—		
Weapon	*ROF*	*Dam*	*Pen*	*Blk*	*Mag*	*SS*	*Brst*	*Rng*
Stoner LMG	10	3	1-Nil	5	30	2	11	60
bipod	10	3	1-Nil	5	30	1	6	75
tripod	10	3	1-Nil	5	30	1	3	90

Stoner M207 (Mk 23 Commando)

Stoner M207/Mk 23 Commando (Machinegun): The M207 machinegun (slightly modified and called the Mk 23 Commando in the US Navy) was the only one of the Stoner 63 system weapons adopted for service by the American armed forces. It saw limited service with SEAL teams and other light raiding forces in Vietnam, where it acquired a reputation for unreliability under adverse conditions.

Because of its adoption by the US Army, the M207/Mk 23 is more readily available than the other weapons of the Stoner 63 system.

Ammo: 5.56mm N
Wt: 6.5 kg
Mag: 100 belt
Price: $850 (S/R)

						—Recoil—		
Weapon	*ROF*	*Dam*	*Pen*	*Blk*	*Mag*	*SS*	*Brst*	*Rng*
M207/Mk 23	10	2	1-Nil	4	100B	2	9	50
bipod	10	2	1-Nil	4	100B	1	5	65
tripod	10	2	1-Nil	4	100B	1	2	80

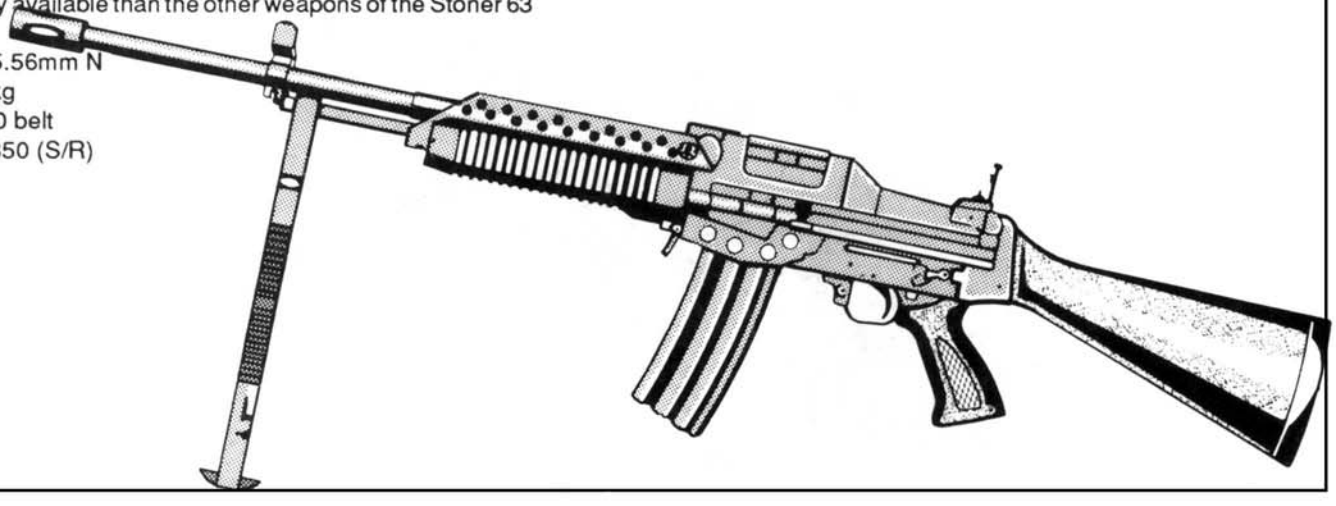

Steyr AUG LMG

Steyr AUG LMG (Machinegun): The Steyr AUG LMG is built on the same action as the AUG rifle and carbine, making it one of the few bullpup-configuration machineguns in service with any army.

Ammo: 5.56mm N
Wt: 3.4 kg
Mag: 30 box
Price: $1000 (R/—)

						—Recoil—		
Weapon	*ROF*	*Dam*	*Pen*	*Blk*	*Mag*	*SS*	*Brst*	*Rng*
AUG LMG	10	3	1-Nil	4	30	4	18	50
bipod	10	3	1-Nil	4	30	2	9	65

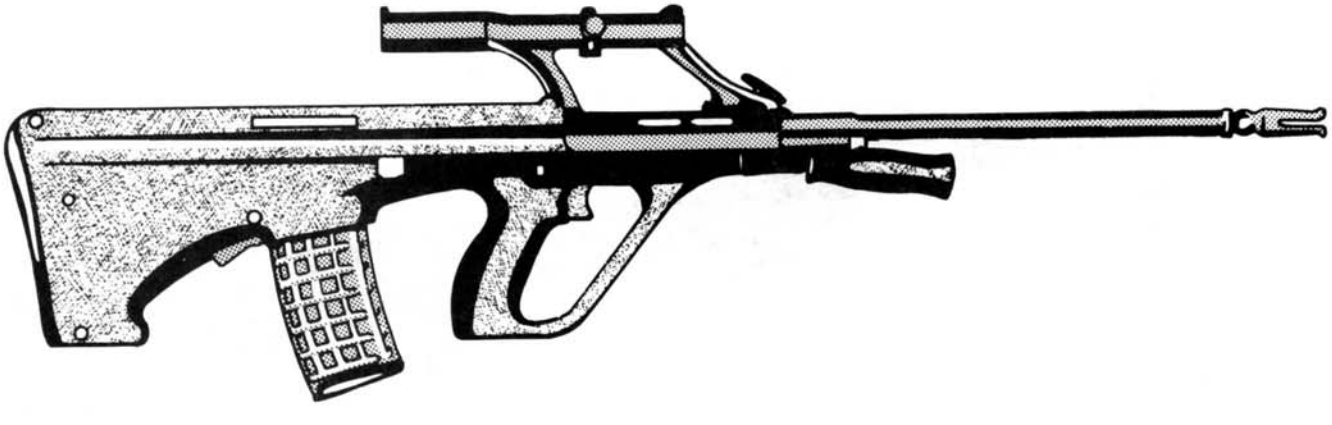

Vickers Mk I

Vickers Mk I (Machinegun): The Vickers Mk I is a water-cooled medium machinegun which was in British service from 1912 to the late 1960s.

Ammo: .303
Wt: 24.3 kg (*Tripod Wt:* 22.7 kg)
Mag: 250 belt
Price: $1350 (S/R)

						—Recoil—		
Weapon	*ROF*	*Dam*	*Pen*	*Blk*	*Mag*	*SS*	*Brst*	*Rng*
Vickers Mk I	5	4	2-Nil	6	250B	1	2	60
tripod	5	4	2-Nil	6	250B	1	1	125

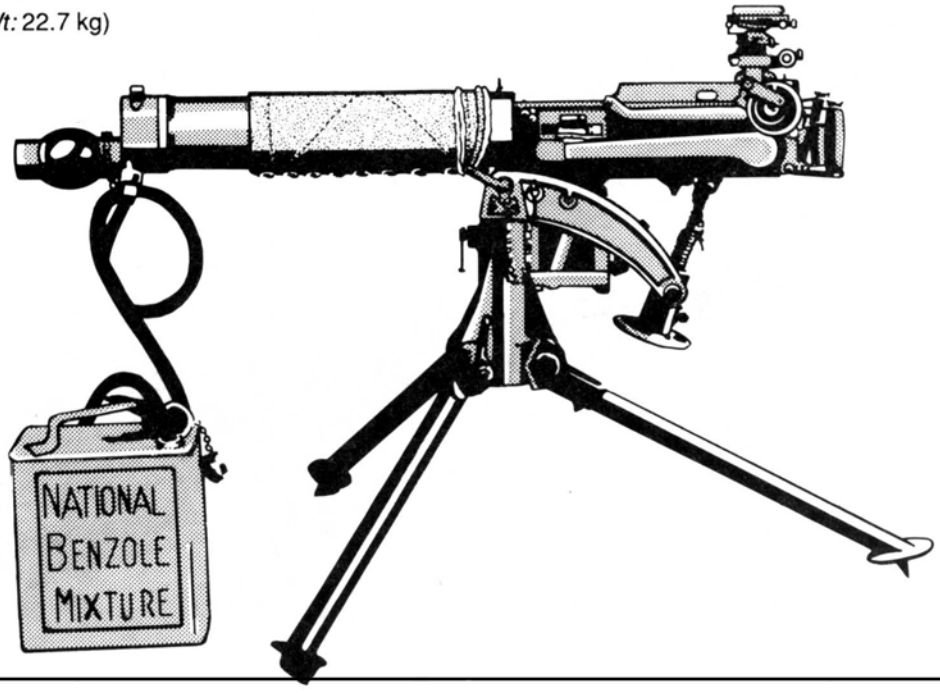

Vz-59

Vz-59 (Machinegun): The standard medium machinegun of the Czech Army, the Vz-59 is a local design which is equipped with a bipod and can also be fired from a tripod (PLT). It accepts 50-round belts.

Ammo: 7.62mm L
Wt: 9 kg
Mag: 50 belt
Price: $1500 (R/R)

						—Recoil—		
Weapon	*ROF*	*Dam*	*Pen*	*Blk*	*Mag*	*SS*	*Brst*	*Rng*
Vz-59	10	4	2-3-Nil	6	50B	1	9	65
bipod	10	4	2-3-Nil	6	50B	1	5	90
tripod	10	4	2-3-Nil	6	50B	1	4	125

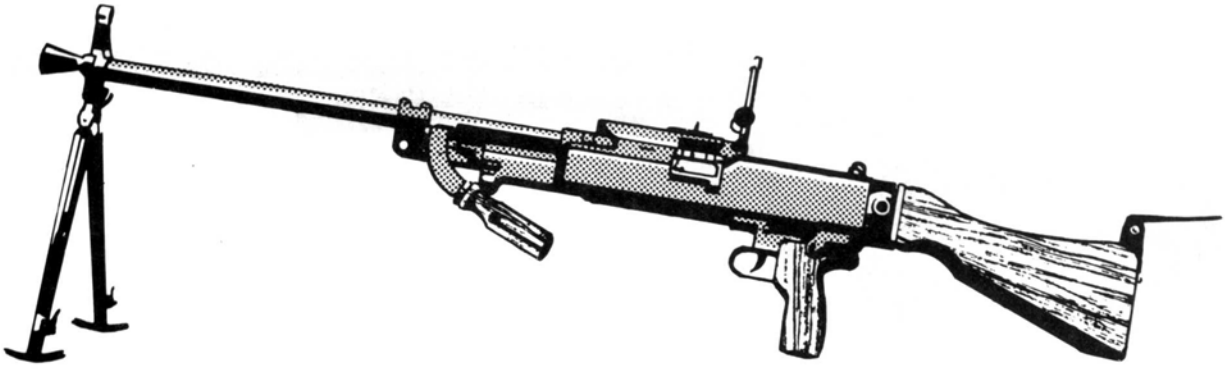

AA-12

AA-12 (Shotgun): An American-designed automatic shotgun manufactured in Korea in a limited run. The AA-12 was never adopted by any military and was soon surpassed by more advanced designs. It remains a collectors' item of considerable interest.

Ammo: 12 gauge
Wt: 7.3 kg
Mag: 7 box or 20 drum
Price: $1200 (R/—)

						—Recoil—		
Weapon	*ROF*	*Dam*	*Pen*	*Blk*	*Mag*	*SS*	*Brst*	*Rng*
AA-12	5	4	3-4-Nil	5	7/20	2	5	40
Close with buckshot*	5	9	Nil					
Medium with buckshot*	5×10	1	Nil					

*See page 200 of **Twilight: 2000**.

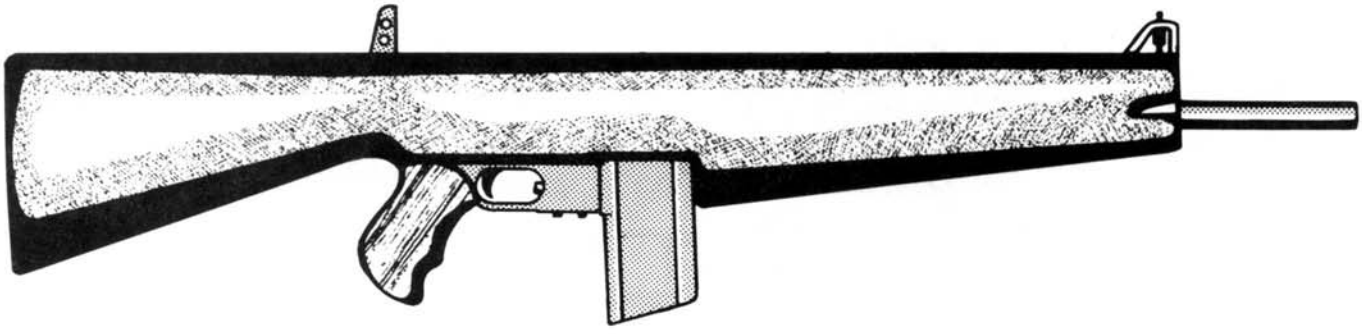

Browning Autoriot

Browning Autoriot (Shotgun): This weapon is a Belgian-built semiautomatic shotgun used by the British in antiguerrilla actions in Malaya after WWII. The weapon is still in common use as a riot gun by police departments worldwide.

Ammo: 12 gauge
Wt: 4 kg
Mag: 5 individual
Price: $450 (C/S)

						—Recoil—		
Weapon	*ROF*	*Dam*	*Pen*	*Blk*	*Mag*	*SS*	*Brst*	*Rng*
Autoriot	SA	4	3-4-Nil	5	5i	3	—	40
Close with buckshot*	SA	9	Nil					
Medium with buckshot*	10	1	Nil					

*See page 200 of **Twilight: 2000**.

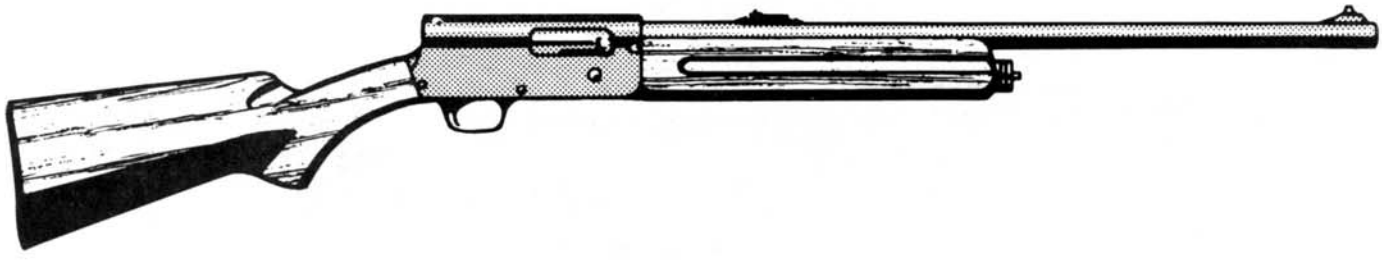

H&K CAW

H&K CAW (Shotgun): The Heckler & Koch CAW (Combat Assault Weapon) is the standard combat shotgun of the German and US Armies (the US weapon being a slightly modified version produced under license by Olin. The CAW is a bullpup-configuration weapon, like the G11.

Ammo: 12 gauge
Wt: 4 kg
Mag: 10 box
Price: $800 (C/R)

						—Recoil—		
Weapon	*ROF*	*Dam*	*Pen*	*Blk*	*Mag*	*SS*	*Brst*	*Rng*
H&K CAW	5†	4	3-4-Nil	4	10	3	8	40
Close with buckshot*	5	9	Nil					
Medium with buckshot*	5×10	1	Nil					

*See page 200 of **Twilight: 2000**.
†See page 200 of **Twilight: 2000** for special CAW rule.

High Standard M10B

High Standard M10B (Shotgun): The High Standard M10B is a bullpup-configuration, semiautomatic, gas-operated shotgun manufactured for military and police use. Features include a removable grip, a yoke for firing one-handed (braced against the crook of the elbow), and a fitting to clip a flashlight to the top. The weapon was never manufactured in large numbers and was a collectors' item by the 1970s.

Ammo: 12 gauge
Wt: 4.3 kg
Mag: 5 individual
Price: $1250 (—/—)

						—Recoil—		
Weapon	*ROF*	*Dam*	*Pen*	*Blk*	*Mag*	*SS*	*Brst*	*Rng*
HSd M10B	SA	4	3-4-Nil	3	5i	4	—	40
Close with buckshot*	SA	9	Nil					
Medium with buckshot*	5×10	1	Nil					

*See page 200 of **Twilight: 2000**.

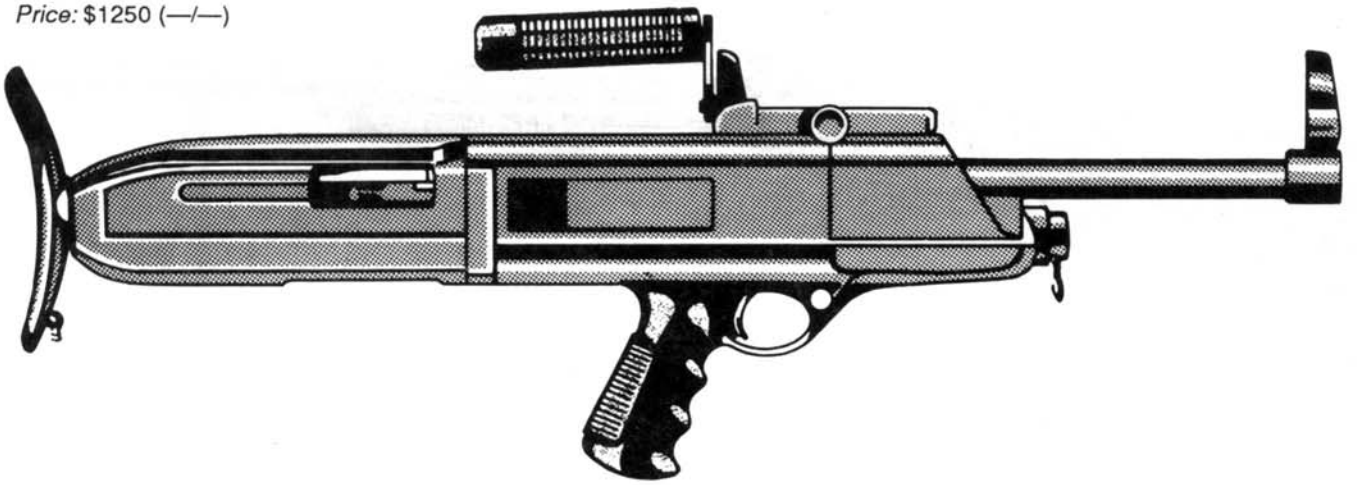

Ithaca Autoburglar

Ithaca Autoburglar (Shotgun): The Autoburglar was sold as a home defense weapon in the 1920s and 1930s. The whippet-configuration weapon (so called because it was designed for people to "whip it out") was originally manufactured in 20 gauge, but a number were made in 12 gauge (including the model dealt with below).

Ammo: 12 gauge
Wt: 2.3 kg
Mag: 2 individual
Price: $450 (S/R)

						—Recoil—		
Weapon	*ROF*	*Dam*	*Pen*	*Blk*	*Mag*	*SS*	*Brst*	*Rng*
Autoburglar	SA	3	Nil	2	2i	6	—	12
Close with buckshot*	SA	9	Nil					
Medium with buckshot*	5×10	1	Nil					

*See page 200 of **Twilight: 2000**.

M500 ATP8S

M500 ATP8S (Shotgun): The Mossberg M500 is a typical pump shotgun designed for police or home defense use rather than hunting.

Ammo: 12 gauge
Wt: 4 kg
Mag: 8 individual
Price: $350 (C/R)

						—Recoil—		
Weapon	*ROF*	*Dam*	*Pen*	*Blk*	*Mag*	*SS*	*Brst*	*Rng*
M500 ATP8S	PA	4	3-4-Nil	5	8i	4	—	40
Close with buckshot*	PA	9	Nil					
Medium with buckshot*	5×10	1	Nil					

*See page 200 of **Twilight: 2000**.

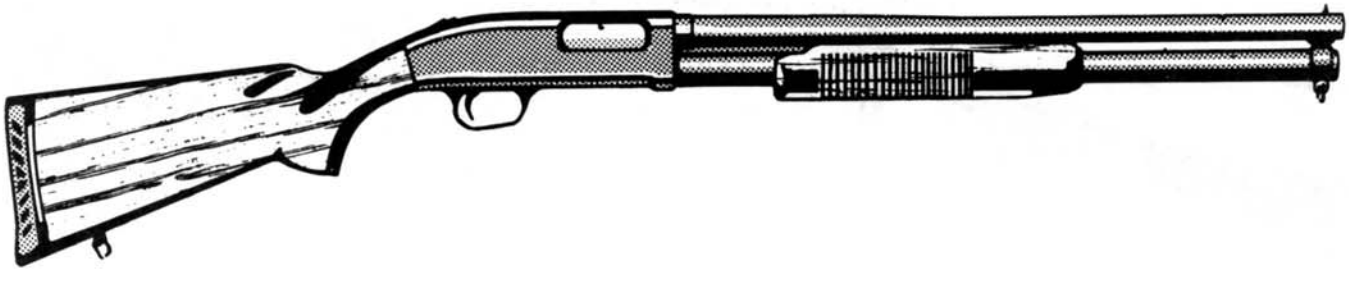

M1917 Trench Gun

M1917 Trench Gun (Shotgun): A WWI-era combat shotgun still found in service with some police and paramilitary organizations worldwide.

Ammo: 12 gauge
Wt: 4 kg
Mag: 5 individual
Price: $650 (S/R)

						—Recoil—		
Weapon	*ROF*	*Dam*	*Pen*	*Blk*	*Mag*	*SS*	*Brst*	*Rng*
M1917	PA	4	3-Nil	5	5i	4	—	40
Close with buckshot*	PA	9	Nil					
Medium with buckshot*	5×10	1	Nil					

*See page 200 of **Twilight: 2000**.

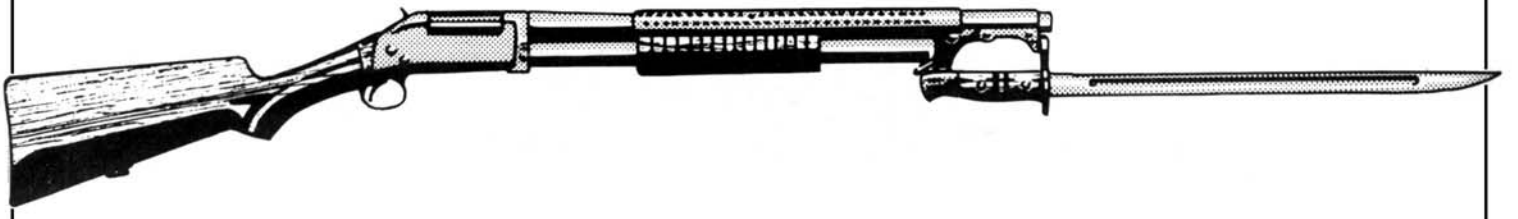

Remington 870P

Remington 870P (Shotgun): The Remington 870 Wingmaster series is a very popular pump shotgun, originally designed as a hunting weapon. The 870P is a special police version, incorporating a less ornate stock, a shorter barrel, and an extended-capacity magazine.

Ammo: 12 gauge
Wt: 4 kg
Mag: 8 individual
Price: $575 (C/S)

						—Recoil—		
Weapon	*ROF*	*Dam*	*Pen*	*Blk*	*Mag*	*SS*	*Brst*	*Rng*
870P	PA	4	3-4-Nil	4	8i	4	—	40
Close with buckshot*	PA	9	Nil					
Medium with buckshot*	5×10	1	Nil					

*See page 200 of **Twilight: 2000**.

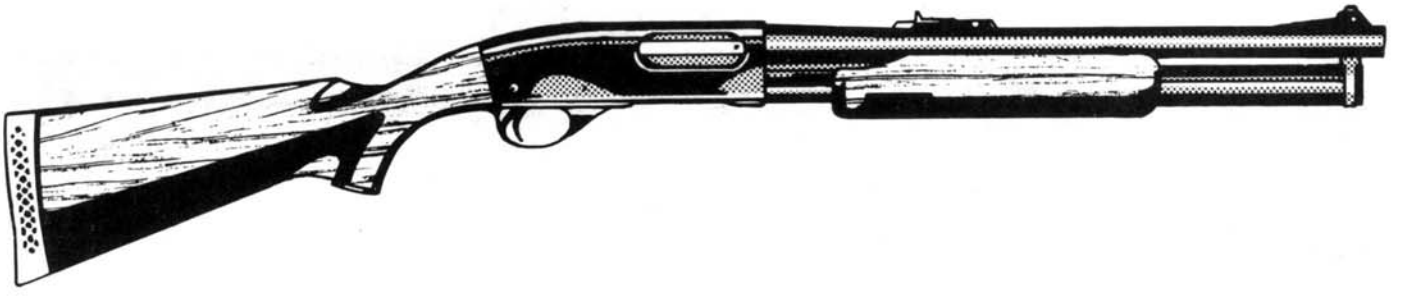

Savage 311-R

Savage 311-R (Shotgun): This weapon is one of the last of the double-barreled shotguns designed for police and prison guard use (hence its nickname of the "guard gun"). It is representative of double-barreled shotguns in general.

Ammo: 12 gauge
Wt: 3.5 kg
Mag: 2 individual
Price: $350 (C/S)

						—Recoil—		
Weapon	*ROF*	*Dam*	*Pen*	*Blk*	*Mag*	*SS*	*Brst*	*Rng*
311-R	SA	4	3-4-Nil	5	2i	5	—	40
Close with buckshot*	SA	9	Nil					
Medium with buckshot*	5×10	1	Nil					

*See page 200 of **Twilight: 2000**.

SPAS-15

SPAS-15 (Shotgun): A French combat shotgun, usable in pump or semiautomatic mode.

Ammo: 12 gauge
Wt: 5 kg
Mag: 10 box
Price: $1100 (S/R)

						—Recoil—		
Weapon	*ROF*	*Dam*	*Pen*	*Blk*	*Mag*	*SS*	*Brst*	*Rng*
SPAS-15	PA/SA	4	3-4-Nil	5	10	4	—	40
Close with buckshot*	PA/SA	9	Nil					
Medium with buckshot*	5×10	1	Nil					

*See page 200 of **Twilight: 2000**.

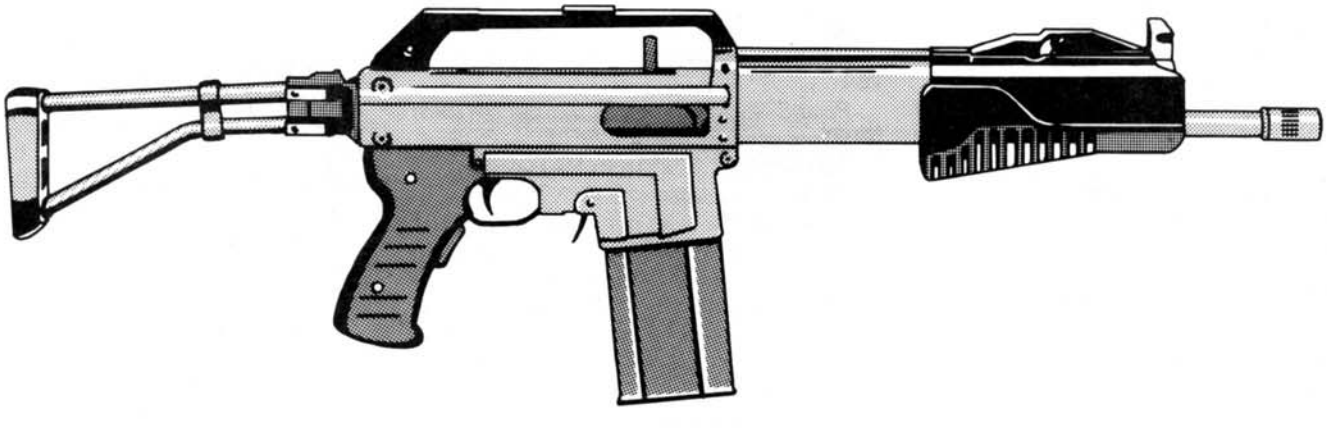

PRICE LIST

Prices and availability for both **Twilight: 2000** and **Merc: 2000** are shown (those for **Merc: 2000** are in brackets). Remember that the availabilities represented differ between the two games (see the appropriate rules book for a detailed explanation).

Weights per magazine include the weight of the magazine (which is negligible in most cases) and ammunition. Magazines are purchased separately and cost $1 per three rounds of capacity, except the 1000-round drum for 5.56mm N, which costs $200.

SMALL ARMS AND MACHINEGUN AMMUNITION

Longbow Arrow:
Wt: 3 kg per 24
Price: $50 per 24 (C/C) [$36 per 24 (C/C)]

Crossbow Bolt:
Wt: 3 kg per 24
Price: $30 per 24 (C/C) [$36 per 24 (C/C)]

Loose Black Powder and Ball: These are most commonly premeasured and wrapped in paper in ready-to-use units.
Wt: 1 kg per 40
Price: $25 per 40 (C/C) [$45 per 40 (S/S)]

4.7mm Cls (4.7×21mm Caseless):
Wt: 10 kg per case of 1800, 1 kg per 50-round magazine
Price: $1000 per case (S/R) [$1300 per case (—/S)]

5.45mm B (5.45×39mm Bloc):
Wt: 10 kg per case of 840, 0.5 kg per 30-round magazine, 0.6 kg per 40-round magazine
Price: $100 per case (C/V) [$170 per case (S/C)]

5.56mm N (5.56×45mm NATO):
Wt: 10 kg per case of 840 or four belts, 0.5 kg per 30-round magazine, 2 kg per 200-round belt, 15 kg per 1000-round drum
Price: $100 per case, $200 per empty drum (V/C) [$160 per case, $375 per empty drum (V/V)]

.22 Scamp (5.56×29mm):
Wt: 12 kg per case of 1000
Price: $100 per case (S/—) [$300 per case (R/S)]

.221 Fireball (5.56×31mm):
Wt: 12 kg per case of 1000
Price: $50 per case (S/—) [$120 (R/S)]

.22 LR (5.7×17mmR Long Rifle):
Wt: 20 kg per case of 5000, 0.1 kg per seven-round magazine
Price: $225 per case (C/S) [$110 per case (V/V)]

.22 Magnum (5.7×24.5mmR):
Wt: 25 kg per case of 5000
Price: $245 per case (R/—) [$130 per case (C/C)]

.25 ACP (6.3×15.5mm):
Wt: 6 kg per case of 1000
Price: $125 per case (C/S) [$85 per case (C/V)]

7.5mm MAS (7.5×54mm MAS):
Wt: 15 kg per case of four belts, 2 kg per 50-round belt
Price: $30 per case (R/R) [$80 per case (R/S)]

7.62mm T (7.62×25mm Tokarev):
Wt: 35 kg per case of 2500, 0.2 kg per eight-round magazine, 0.6 kg per 32-round magazine
Price: $250 per case (R/S) [$375 per case (R/S)]

7.62mm T Subsonic (7.62×25mm Tokarev Subsonic):
Wt: 35 kg per case of 2500, 0.2 kg per eight-round magazine, 0.6 kg per 32-round magazine
Price: $750 per case (R/S) [$500 (—/R)]

.30 M (7.62×25mm Mauser):
Wt: 15 kg per case of 1000
Price: $225 per case (S/S) [$95 per case (S/C)]

.30 Carbine (7.62×33mm):
Wt: 15 kg per case of 1000
Price: $120 per case (C/R) [$95 per case (C/V)]

7.62mm S (7.62×39mm Short):
Wt: 10 kg per case of 600, 1 kg per 30-round magazine
Price: $80 per case (S/C) [$80 per case (R/S)]

.30-30 (7.62×51mmR):
Wt: 20 kg per case of 1000, five loose rounds per kilogram
Price: $170 per case (C/S) [$130 per case (V/V)]

.303 (7.7×56mmR):
Wt: 30 kg per case of 1000, 7 kg per belt of 250
Price: $195 per case (S/S), $24 per belt (S/S) [$150 per case, 38 per belt (S/C)]

7.62mm N (7.62×51mm NATO):
Wt: 15 kg per case of 600, 0.75 kg per 20-round magazine, 3 kg per 100-round belt
Price: $65 per case (C/S) [$75 per case (C/V)]

7.62mm L (7.62×54mmR Long):
Wt: 15 kg per case of 600, 0.3 kg per 10-round magazine, 3 kg per 100-round belt
Price: $70 per case (S/C) [$80 per case (C/V)]

.30-06 (7.62×63mm):
Wt: 15 kg per case of 500, 35 loose rounds per kilogram
Price: $80 per case (S/R) [$95 per case (C/C)]

.32 ACP (7.65×17mmSR):
Wt: 20 kg per case of 2000, 0.1 kg per 10-round magazine, 0.2 kg per 20-round magazine
Price: $150 per case (S/S) [$240 per case (V/V)]

.32 Subsonic (7.65×17mmSR Subsonic):
Wt: 20 kg per case of 2000, 0.1 kg per 10-round magazine, 0.2 kg per 20-round magazine
Price: $350 per case (R/—) [$450 per case (—/S)]

8mm K (7.92×33mm Kurz):
Wt: 20 kg per case of 1000
Price: $120 per case (S/R) [$700 per case (—/R)]

8mm M (7.92×57mm Mauser):
Wt: 10 kg per case of 300, 30 rounds per kilogram
Price: $30 per case (S/S) [$45 per case (C/V)]

8mm P (7.92×95mm Patronen):
Wt: 5 kg per box of 50
Price: $75 per box (S/R) [$250 per box (—/R)]

8mm Nambu (8×21mm):
Wt: 15 kg per case of 1000
Price: $250 per case (R/—) [$55 per case (S/C)]

.380 ACP (9×17mm):
Wt: 15 kg per case of 1500, 0.1 kg per seven-round magazine
Price: $125 per case (C/S) [$240 per case (V/V)]

9mm M (9×18mm Makarov):
Wt: 15 kg per case of 1500, 0.1 kg per eight-round magazine
Price: $200 per case (S/C) [$200 per case (C/C)]

9mm P (9×19mm Parabellum):
Wt: 15 kg per case of 1500, 0.1 kg per eight-round magazine, 0.2 kg per 13-round and 15-round magazine, 0.3 kg per 25-round and 30-round magazine, 0.4 kg per 32-round and 34-round magazine.
Price: $225 per case (V/C) [$195 per case (V/V)]

.38 Special (9×29mmR):
Wt: 15 kg per case of 1000
Price: $175 per case (S/R) [$90 per case (V/V)]

.357 Magnum (9×33mmR):
Wt: 18 kg per case of 1000
Price: $500 per case (S/R) [$100 per case (V/V)]

.44-40 (10.8×33.8mmR):
Wt: 25 kg per case of 1000
Price: 500 per case (R/—) [$110 per case (S/S)]

.44 Magnum (11.2×32.8mmR):
Wt: 20 kg per case of 1000
Price: $550 per case (R/—) [$120 per case (V/V)]

.44 Automagnum (10.9×32.9mm):
Wt: 1 kg per box of 50
Price: $200 per box (—/—) [$50 per box (R/S)]

10mm (10×24mm)
Wt: 21 kg per case of 1000

Price: $85 per case (R/—) [$50 per case (S/C)]

.45 ACP (11.43×23mm):

Wt: 20 kg per case of 1000, 0.3 kg per seven-round magazine

Price: $63 per case (S/R) [$110 per case (V/V)]

.45-70 Govt (11.6×54mmR):

Wt: 20 per case of 500

Price: $120 per case (S/—) [$95 per case (C/C)]

.45 WM (11.6×56mm Wildey Magnum):

Wt: 1 kg per box of 50

Price: $200 per box (—/—) [$95 per box (R/S)]

.455 (11.43×19mmR Webley):

Wt: 14 kg per case of 500

Price: $95 per case [$55 per case (S/C)]

.458 WBM (11.6×63.5mm Winchester Belted Magnum):

Wt: 1 kg per box of 50

Price: $180 per box (R/—) [$50 per box (S/S)]

.460 Wby (11.6×74mmR):

Wt: 1 kg per box of 50

Price: $175 per box (R/—) [$65 per box (S/S)]

12.7mm B (12.7×83mmR Bloc):

Wt: 25 kg per case of two belts, 11 kg per 50-round belt

Price: $35 per case (S/C) [$80 per case (—/S)]

.50 BMG (12.7×99mm Browning Machinegun):

Wt: 15 kg per case of one belt, 13 kg per 105-round belt

Price: $35 per case (C/S) [*Price:* $75 per case (S/V)]

.50 SLAP (12.7×99mm Saboted Light Armor Piercing):

Wt: 15 kg per case of one belt, 13 kg per 105-round belt

Price: $60 per case (S/R) [$85 per case (S/V)]

.55 Boys (13.9×99mm):

Wt: 1.5 kg per box of 10

Price: $250 per box (R/—) [$125 per box (R/S)]

.600 Nitro (15.7×76mmR Nitro Express):

Wt: 1 kg per box of 10

Price: $250 per box (—/—) [$130 per box (R/S)]

14.5mm B (14.5×114mm Bloc):

Wt: 30 kg per case of one belt, 25 kg per 100-round belt

Price: $30 per case (S/C) [$110 per case (—/S)]

12 Gauge (12 Gauge All-Brass):

Wt: 15 kg per case of 240, 1 kg per 10-round magazine (15 loose rounds per kilogram)

Price: $100 per case (C/C) [$110 per case (V/V)]

PISTOLS

.44 Automag: *Price:* $4000 (R/—) [$750 (R/S)]

Beretta M34: *Price:* $400 (R/R) [$350 (C/C)]

Browning .25: *Price:* $100 (C/R) [$400 (C/C)]

Browning HP-35: *Price:* $150 (S/R) [$475 C/C)]

Colt Detectives Special: *Price:* $375 (C/R) [$400 (C/C)]

Colt M1911A1: *Price:* $100 (C/S) [$275 C/C)]

Colt Police Positive/10: *Price:* $450 (C/R) [$400 (C/C)]

Colt Police Positive/12.7: *Price:* $450 (C/R) [$420 (C/C)]

Colt Police Positive/15: *Price:* $475 (C/R) [$425 (C/C)]

Colt Python/6.6: *Price:* $650 (S/R) [$425 (C/C)]

Colt Python/10.2: *Price:* $650 (S/R) [$430 (C/C)]

Colt Python/15.2: *Price:* $700 (S/R) [$450 (C/C)]

Colt Python/20.3: *Price:* $725 (S/R) [$450 (C/C)]

COP .357: *Price:* $250 (S/—) [$375 (R/D)]

High Standard .22: *Price:* $250 (C/R) [$300 (V/V)]

High Standard Derringer: *Price:* $75 (S/R) [$200 (S/C)]

HK-4: *Price:* $180 (S/R) [$400 (C/C)]

HK P9S: *Price:* $700 (C/S) [$500 (C/C)]

M9 (Beretta M92S): *Price:* $150 (V/S) [$540 C/C)]

M14 Nambu: *Price:* $550 (S/S) [$450 (S/S)]

M1933 Tokarev: *Price:* $100 (R/C) [$350 (—/C)]

Mamba: *Price:* $450 (S/S) [$400 (S/C)]

Mauser HSc: *Price:* $350 (S/S) [$450 (S/S)]

Mauser M1896: *Price:* $1000 (R/R) [$450 (S/C)]

P7 M13: *Price:* $150 (V/S) [$450 (S/C)]

P-08 Luger/10.2: *Price:* $800 (C/S) [$450 (CC)]

P-08 Luger/15.2: *Price:* $850 (S/R) [$475 (S/S)]

P-08 Luger/19: *Price:* $925 (R/—) [$600 (R/R)]

PA-15: *Price:* $150 (S/R) [$450 (S/C)]

P-64: *Price:* $170 (R/S) [$400 (—/S)]

PM Makarov: *Price:* $150 (S/V) [$400 (—/C)]

Remington XP-100: *Price:* $350 (R/—) [$750 (S/S)]

Ruger P-85: *Price:* $500 (C/S) [$550(S/C)]

Ruger Blackhawk: *Price:* $500 (R/—) [$450 (S/S)]

S&W Model 29/16.5: *Price:* $1000 (R/—) [$430 (C/C)]

S&W Model 29/21.3: *Price:* $1000 (R/—) [$450 (C/C)]

S&W Model 29/10.2: *Price:* $900 (R/—) [$450 (C/C)]

S&W Model 19/6.6: *Price:* $350 (R/—) [$350 (C/C)]

S&W Model 19/10.2: *Price:* $350 (R/—) [$350 (C/C)]

S&W Model 19/15.3: *Price:* $375 (R/—) [$350 (C/C)]

S&W Model 27/9: *Price:* $450 (R/—) [$365 (C/C)]

S&W Model 27/13: *Price:* $450 (R/—) [$365 (C/C)]

S&W Model 27/15: *Price:* $475 (R/—) [$375 (C/C)]

S&W Model 27/21: *Price:* $475 (R/—) [$375 (C/C)]

S&W Model 36: *Price:* $315 (S/R) [$300 (C/C)]

S&W Model 39, 439, 639: *Price:* $485 (C/R) [$435 (C/C)]

S&W Model 59, 459, 659: *Price:* $495 C/R) [$475 (C/C)]

SIG P-210-2: *Price:* $550 (S/R) [$550 (S/C)]

Steyr GB80: *Price:* $750 (S/R) [$550 (S/C)]

Vz-52: *Price:* $100 (R/S) [$400 (—/S)]

Walther P-38: *Price:* $650 (R/R) [$500 (C/V)]

Walther PPK: *Price:* $500 (S/R) [$475 (C/V)]

Webley Mk 6: *Price:* $350 (S/R) [$550 (SS)]

Webley Fosbury: *Price:* $450 (R/—) [$675 (S/S)]

Welrod .32: *Price:* $800 (—/—) [$1200 (—/R)]

Wildey .45 WM: *Price:* $1200 (—/—) [$1500 (—/R)]

SUBMACHINEGUNS

180 M-2: *Price:* $250 (R/—) [$500 (—/R)]

AKR: *Price:* $300 (S/C) [$400 (—/C)]

AMD-65: *Price:* $300 (R/S) [$450 (—/S)]

Beretta M12: *Price:* $400 (R/—) [$650 (—/V)]

Beretta M38A: *Price:* $700 (R/—) [$700 (—/V)]

Beretta M93R: *Price:* $650 (S/R) [$750 (—/V)]

Bushmaster: *Price:* $450 (R/—) [$450 (R/S)]

M177: *Price:* $750 (S/R) [$700 (—/V)]

Colt 9mm SMG: *Price:* $850 (S/R) [$720 (S/C)]

Colt Scamp: *Price:* $750 (R/—) [$1200 (—/R)]

F1A1: *Price:* $750 (R/—) [$1200 (—/R)]

HM-3: *Price:* $750 (C/S) [$800 (—/R)]

Ingram M10 9mm: *Price:* $350 (C/S) [$650 (R/C)]

Ingram M10 .45: *Price:* $450 (R/R) [$700 (—/C)]

Ingram M11: *Price:* $400 (R/R) [$700 (—/C)]

K-50: *Price:* $450 (R/S) [$500 (—/S)]

L2A3 Sterling: *Price:* $600 (C/S) [$500 (—/V)]

L34A1 Sterling: *Price:* $850 (R/—) [$1000 (—/S)]

M-45 Carl Gustav: *Price:* $400 (C/S) [$750 (—/S)]

M3A1: *Price:* $300 (S/R) [$500 (—/C)]

M231: *Price:* $300 (V/C) [$700 (—/S)]

Madson M50: *Price:* $450 (C/S) [$750 (—/S)]

MAT-49: *Price:* $300 (S/R) [$650 (—/C)]

Mauser M32: *Price:* $825 (S/R) [$750 (—/S)]

Mini-Uzi: *Price:* $600 (C/S) [$750 (—/S)]

MP-5: *Price:* $400 (C/S) [$500 (—/V)]

MP-5K: *Price:* $450 (S/R) [$600 (—/C)]

MP-5SD3: *Price:* $1200 (S/R) [$800 (—/R)]
MP18-1: *Price:* $900 (—/—) [$750 (—/S)]
MP-40: *Price:* $1200 (R/R) [$850 (—/R)]
MPi-69: *Price:* $450 (S/R) [$750 (—/S)]
OSS M3: *Price:* $800 (R/—) [$1250 (—/—)]
Owen Mk I: *Price:* $650 (R/—) [$800 (—/R)]
PM-9: *Price:* $550 (S/R) [$750 (—/S)]
PM-63: *Price:* $350 (R/S) [$750 (—/S)]
PPSh-41: *Price:* $300 (—/S) [$600 (—/V)]
PPSh-43: *Price:* $300 (R/C) [$600 (—/V)]
Rexim F.V. Mk 4: *Price:* $650 (S/—) [$600 (—/V)]
S&W M76: *Price:* $800 (S/—) [$700 (—/S)]
Sidewinder SS-1: *Price:* $750 (S/—) [$850 (—/S)]
Stechkin: *Price:* $750 (R/S) [$700 (—/S)]
Sten Mk II: *Price:* $450 (C/S) [$650 (R/S)]
Sten Mk IIS: *Price:* $750 (S/—) [$900 (—/R)]
Thompson M1: *Price:* $1000 (S/R) [$750 (R/S)]
Thompson M1928: *Price:* $1500 (R/—) [$1600 (—/S)]
Type 64: *Price:* $750 (—/S) [$700 (—/S)]
Uzi: *Price:* $500 (V/C) [$500 (—/V)]
VP-70: *Price:* $800 (S/R) [$710 (R/C)]
Vz-24: *Price:* $300 (R/S) [$750 (—/R)]
Vz-61/62 Skorpion: *Price:* $250 (R/S) [$800 (—/R)]

RIFLES

.50 Hawken: *Price:* $300 (S/R) [$320 (C/C)]
.69-Caliber Musket: *Price:* $200 (S/R) [$350 (C/C)]
.460 Weatherby: *Price:* $750 (R/—) [$950 (S/S)]
AK-47: *Price:* $150 (C/V) [$350 (S/V)]
AKM: *Price:* $300 (C/V) [$500 (—/C)]
AKMS: *Price:* $325 (S/C) [$575 (—/C)]
AKMR: *Price:* $300 (C/V) [$550 (—/C)]
AK-74: *Price:* $300 (C/C) [$500 (—/V)]
ALC-2: *Price:* $12,000 (—/—) [$25,000 (—/—)]
AR-7 Explorer: *Price:* $100 (C/R) [$150 (V/V)]
AR-10: *Price:* $500 (S/—) [$1000 (—/R)]
AR-18: *Price:* $450 (S/R) [$1000 (—/R)]
AR-70: *Price:* $500 (R/—) [$650 (—/S)]
AR-180: *Price:* $400 (S/R) [$600 (S/S)]
Arisaka Model 99: *Price:* $450 (R/—) [$350 (R/R)]
BAR M1918A2: *Price:* $875 (R/—) [$900 (—/S)]
Barret M82 "Light Fifty": *Price:* $2200 (R/—) [$2700 (—/S)]
BM-59: *Price:* $550 (R/R) [$650 (S/C)]
C3: *Price:* $400 (R/R)) [$1200 (C/C)]
De Lisle Carbine: *Price:* $1000 (R/—) [$1200 (—/R)]
Enfield No. 4, Mk I: *Price:* $300 (C/S) [$320 (S/C)]
FA-MAS: *Price:* $500 (R/—) [$750 (—/S)]
FG-42: *Price:* $750 (R/—) [$1850 (—/R)]
FN-CAL: *Price:* $500 (S/R) [$700 (—/V)]
FN-LAR: *Price:* $600 (S/R) [$650 (—/V)]
FN-FNC: *Price:* $500 (C/S) [$700 (—/V)]
FN-LAR/L1A1: *Price:* $600 (S/R) [$650 (S/C)]
FR-F1: *Price:* $900 (R/—) [$1250 (—/R)]
G3: *Price:* $500 (C/R) [$1400 (—/S)]
G11: *Price:* $400 (S/R) [$800 (—/S)]
Galil ARM: *Price:* $600 (S/S) [$1300 (S/C)]
H&H .600 Nitro: *Price:* $1500 (—/—) [$4500 (—/—)]
HK 33A2: *Price:* $345 (S/R) [$1000 (—/C)]
KAR-98K: *Price:* $300 (S/R) [$275 (S/C)]
L42: *Price:* $400 (R/R) [$1200 (C/C]
L85 IWS: *Price:* $1500 (R/R) [$750 (—/R)]
M1 Carbine: *Price:* $600 (C/S) [$350 (C/C)]
M1 Garand: *Price:* $600 (C/S) [$850 (S/C)]
M2 Carbine: *Price:* $800 (S/R) [$1100 (RC)]
M14: *Price:* $400 (S/R) [$1100 (S/C)]
M16A1: *Price:* $400 (C/S) [$550 (R/V)] *AR-15:* $300 (C/S) [$450 (V/V)]
M16A2: *Price:* $400 (V/C) [$650 (—/V)]
M21: *Price:* $400 (S/R) [$1200 (C/C)]
M40: *Price:* $700 (R/R) [$1100 (C/C)]
M249 SAW: *Price:* $1500 (S/R) [$750 (—/C)]
MAS-49/56: *Price:* $550 (C/R) [$750 (R/S)]
Mk I Boys Antitank Rifle: *Price:* $1200 (R/—) [$1900 (—/S)]
MKS: *Price:* $475 (R/—) [$1100 (R/S)]
MP-44: *Price:* $750 (S/R) [$1500 (—/R)]
Nagant M1891/30: *Price:* $275 (—/S) [$195 (S/C)]
PSG1: *Price:* $600 (R/R) [$1250 (—/C)]
PTRS-41: *Price:* $1200 (—/R) [$1400 (—/R)]
PzB 39: *Price:* $1450 (R/—) [$1900 (—/R)]
Remington M700: *Price:* $450 (C/R) [$950 (C/C]
RPK: *Price:* $1000 (S/C) [$675 (—/C)]
RPK-74: *Price:* $1000 (S/C) [$700 (—/C]
Ruger Mini-14/AC-556: *Price:* $250 (C/R) [$450 (CC)] *AC-556:* $550 (S/—) [$650 (CC)]
SIG 510-4: *Price:* $550 (S/R) [$700 (S/C)]
SKS: *Price:* $250 (S/C) [$375 (S/V)]
Springfield 1873: *Price:* $250 (S/R) [$1250 (R/R)]
Springfield 1903: *Price:* $450 (R/—) [$950 (S/S)]
Stoner M22 Rifle: *Price:* $650 (R/—) [$900 (—/R)]
Stoner M23 Carbine: *Price:* $650 (R/—) [$900 (—/R)]
Steyr AUG: *Price:* $400 (S/R) [$650 (S/C)]
Steyr AUG Carbine: *Price:* $400 (S/R) [$700 (S/C)]
Steyr SSG-69: *Price:* $450 (S/R) [$1100 (R/S)]
SVD: *Price:* $500 (R/S) [$1100 (—/S)]
Type 64: *Price:* $650 (R/—) [$950 (S/C)]
Valmet M71: *Price:* $450 (R/—) [$700 (—/S)]
Vz-54: *Price:* $300 (R/R) [$950 (C/C)]
Vz-58V: *Price:* $375 (S/C) [$750 (—/S)]
WA-2000: *Price:* $2000 (R/—) [$1800 (R/R)]
Winchester M70 African: *Price:* $475 (S/S) [$800 (C/C)]
Winchester 1873: *Price:* $600 (S/R) [$1100 (R/R)]
Winchester 1894: *Price:* $275 (C/R) [$450 (C/C)]

MACHINEGUNS

AAT-52: *Price:* $400 (R/R) [$1800 (—/R)]
Bren L2A4: *Price:* $1200 (R/—) [$900 (—/C)]
Bren Mk II: *Price:* $1100 (R/—) [$1000 (—/S]
Browning M1917A1: *Price:* $1300 (S/R) [$2000 (—/R)]
Browning M1919A4: *Price:* $1200 (S/R) [$1800 (—/R)]
Colt M1895/1914: *Price:* $1800 (—/—) [$3500 (—/R)]
DP: *Price:* $850 (—/S) [$4000 (—/R)]
DShK: *Price:* $2000 (C/V) [$4200 (—/C)]
FMM 24/29: *Price:* $1100 (R/—) [$2100 (—/R)]
HK-21: *Price:* $1200 (S/R) [$2400 (—/C)]
KPV: *Price:* $3000 (S/C) [$4500 (—/S)]
L86A1 LSW: *Price:* $1500 (R/R) [$850 (—/S)]
Lewis Mk I: *Price:* $1200 (S/R) [$1100 (R/R)]
M214 6-Pac: *Price:* $10,000 (R/R) [$7500 (—/R)]
M2HB: *Price:* $1600 (V/C) [$3500 (—/V)]
M60: *Price:* $1500 (S/R) [$1800 (—/V)]
M134 Minigun: *Price:* $2400 (S/—) [$8500 (—/R)]
MAG: *Price:* $1500 (S/R) [$1700 (—/V)]
MG-3: *Price:* $1200 (S/R) [$1800 (—/C)]
MG-08: *Price:* $1800 (—/—) [$1800 (—/R)]
MG-34: *Price:* $1400 (S/R) [$1400 (—/S)]
MG-42: *Price:* $1400 (S/R) [$1600 (—/R)]
PK: *Price:* $2000 (R/S) [$1600 (—/V)]
PKM: *Price:* $2000 (R/S) [$1600 (—/V)]
RPD: *Price:* $1000 (R/S) [$650 (—/S)]
SG-43: *Price:* $1100 (R/S) [$1500 (—/R)]
Stoner LMG: *Price:* $650 (R/—) [$1800 (—/R)]
Stoner M207/Mk 23 Commando: *Price:* $850 (S/R) [$1600 (—/S)]
Steyr AUG LMG: *Price:* $1000 (R/—) [$1200 (—/S)]
Vickers Mk I: *Price:* $1350 (S/R) [$1800 (—/R)]
Vz-59: *Price:* $1500 (R/R) [$2000 (—/S)]

SHOTGUNS

AA-12: *Price:* $1200 (R/—) [$1800 (—/—)]
Browning Autoriot: *Price:* $450 (C/S) [$300 (S/S)]
H&K CAW: *Price:* $800 (C/R) [$750 (—/S)]
High Standard M10B: *Price:* $1250 (—/—) [$1800 (—/—)]
Ithaca Autoburglar: *Price:* $450 (S/R) [$175 (S/S)]
M500 ATP8S: *Price:* $350 (C/R) [*Price:* $350 (V/V)]
M1917 Trench Gun: *Price:* $650 (S/R) [*Price:* $550 (—/S)]
Remington 870P: *Price:* $575 (C/S) [*Price:* $350 (V/V)]
Savage 311-R: *Price:* $350 (C/S) [*Price:* $250 (V/V)]
SPAS-15: *Price:* $1100 (S/R) [$*Price:* $550 (S/C)]

Infantry WEAPONS of the World

Infantry Weapons of the World covers over 220 pistols, rifles, submachineguns, machineguns, and shotguns, each illustrated in full detail, and each fully rated for use with **Twilight: 2000** and any other game using the same basic system (**Merc: 2000**, **Dark Conspiracy**, and **Cadillacs and Dinosaurs**).

This handbook includes all major military weapons in service with the world's armies in the year 2000, plus older weapons from past conflicts: WWII, WWI, and even some weapons of the colonial wars of the last century!

Weapons covered in this book include the Automag .44, Colt Detectives Special, HK 4, Mauser M1896, P-08 Luger (three varieties), Remington XP-100, Welrod .32, M-45 Carl Gustav, M3A1, Madson M50, S&W M76, VP-70, AR-7 Explorer, BM-59, H&H .600 Nitro Double Express Elephant gun, .45 Martini-Henry, Stoner 63 series (Carbine, rifle, LMG and HMG), H&K CAW, SPAS-15 and hundreds more.

Infantry Weapons of the World will prove a valuable resource for the modern weapons enthusiast (player or referee, gamer or nongamer).

TM2002 12.00

0 86079 02002 6

Made in U.S.A.
Printed in U.S.A.

ISBN 1-55878-068-8
Copyright©1990 GDW, Inc.
All rights reserved.

Twilight: 2000™ is a trademark of GDW, Inc.

TWILIGHT: 2000

SINCE 1973

GDW GAMES

P.O. Box 1646
Bloomington, IL 61702-1646