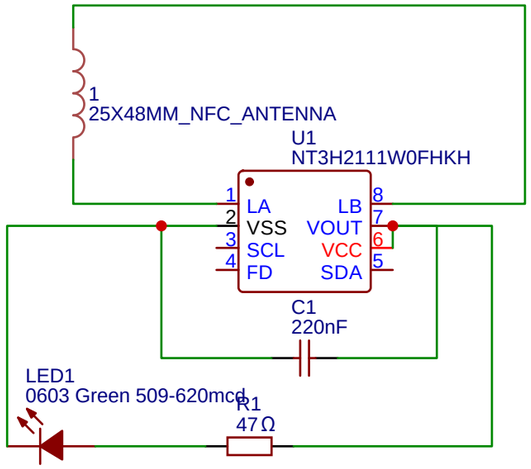

TITLE: starseven		REV: 1.0
EasyEDA	Company: whitepeach	Sheet: 1/1
	Date: 2025-07-26 Drawn By: b7w	