University of Science and Technology of Southern Philippines

Technology Promotions and Commercialization Office

Detailed Description

Engr. Clark Darwin M. Gozon
ITSO Technical Expert
clarkdarwin.gozon@ustp.edu.ph

PUM TM © ID

DETAILED DESCRIPTION OF THE INVENTION/ UTILITY MODEL

1. Complete Description of the Manner of:
   - Constructing
   - Making
   - Compounding, and
   - Using the invention
2. Description must:
   - Be in such full, clear, concise and in exact terms
   - Enable person skilled in the art of science to make, construct, compound and use the invention
   - designate reference numerals to refer to each element
3. Best Mode and/or at least one way of Carrying-Out the Invention

DETAILED DESCRIPTION OF THE INVENTION/ UTILITY MODEL

TIPS IN DRAFTING DETAILED DESCRIPTION:

1. Avoid using phrases such as "the invention is…" instead use phrases like:

a. "in a preferred embodiment of the invention..."

b. "Shown in Fig. 2 is an exemplary embodiment of the invention..."

c. "in a second embodiment of the invention shown in Fig. 4..."

Note: It is prudent to write as many embodiments and variations as possible in the specification. This will ensure that patent claims will also receive the broadest interpretation possible.

Detailed Description of the Invention

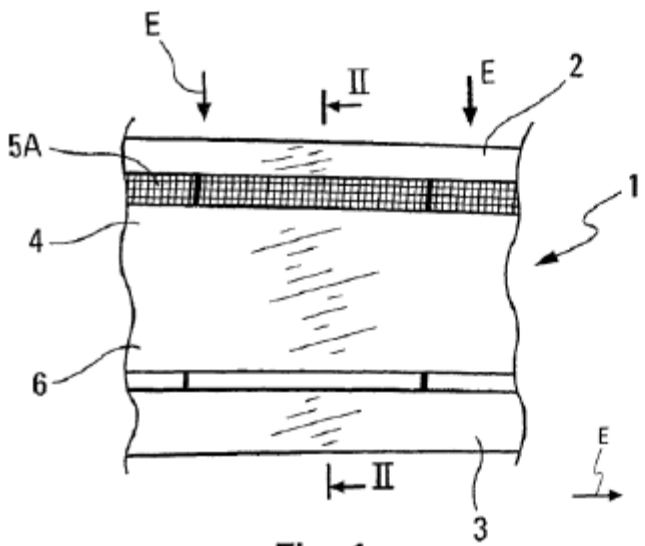

Fig. 1

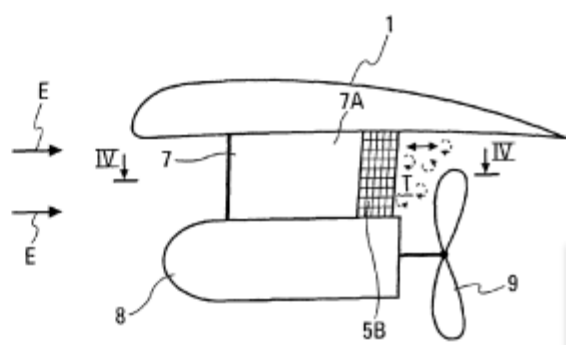

Fig. 3

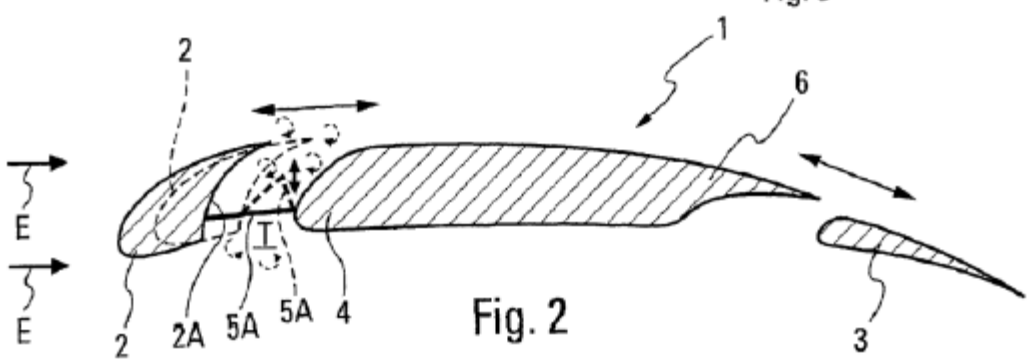

Fig. 2

DETAILED DESCRIPTION

On FIGS. **1** and **2**, according to the first exemplary embodiment of the invention, there is illustrated an airplane wing **1** provided with a leading edge slat **2** and a trailing edge flap **3**, both being mobile.

As shown on FIG. **2**, the slat **2** is represented in a continuous line, when it is integrally retracted, and in a discontinuous line when it occupies a partially extended position.

In an integrally extended position, an air flow (symbolized by the arrow E) around the slat **2** generates a turbulence area T in the vicinity of the downstream part of the latter. The upstream part **4** of the wing **1**, being arranged in the downstream extension of the extended slat **2**, is then immersed at least partially in the turbulence area T. The interaction of the turbulences with the upstream part **4** of the wing **1** causes aerodynamic noise, which is in particular undesirable upon an approach or a take off phase.

According to the invention, to reduce at least in part such undesirable aerodynamic noise, a noise reduction net **5A** is arranged between the slat **2** and the upstream part **4** of the wing **1**, thereby breaking the turbulences being formed and reducing the noise strength on such a way. The net **5A** extends longitudinally between the slat **2** and the wing **1** and is fastened, on one side, to the undersurface **2A** of said slat **2** and, on the other side, to the opposite upstream part **4** of said wing **1**.

The net **5A**, for example made with geometric meshes, is flexible and foldable. It can occupy at least one intermediate position between the two following extreme positions:

one extended position in which it is arranged in said turbulence area T (the net **5A** is represented in a continuous line in this position on FIG. **2**). Such an extended position corresponds to an integral extension of the slat **2**;

Detailed Description of the Invention

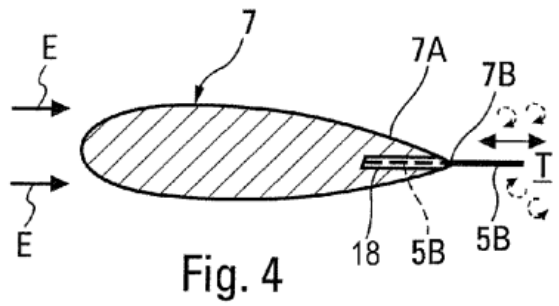

Fig. 4

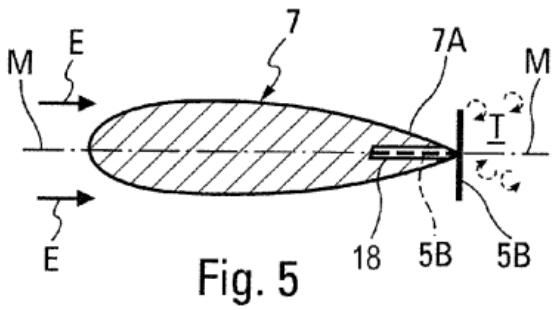

Fig. 5

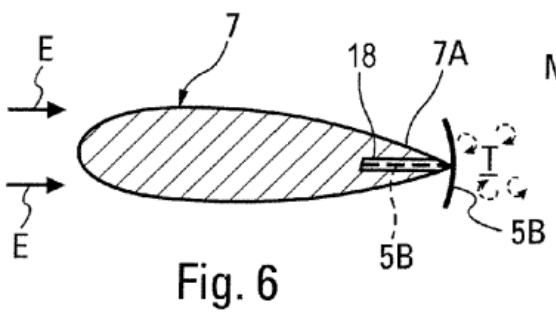

Fig. 6

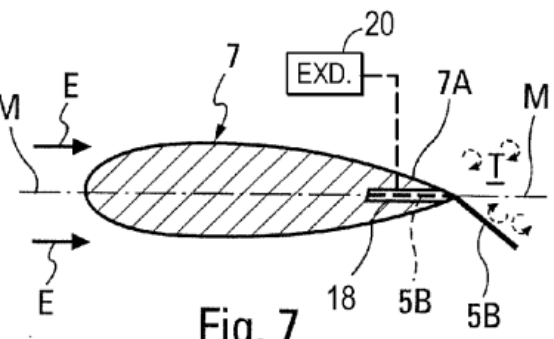

Fig. 7

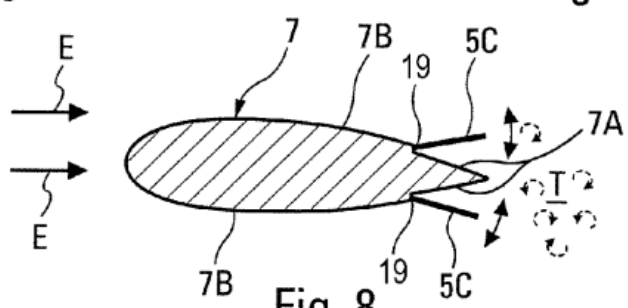

Fig. 8

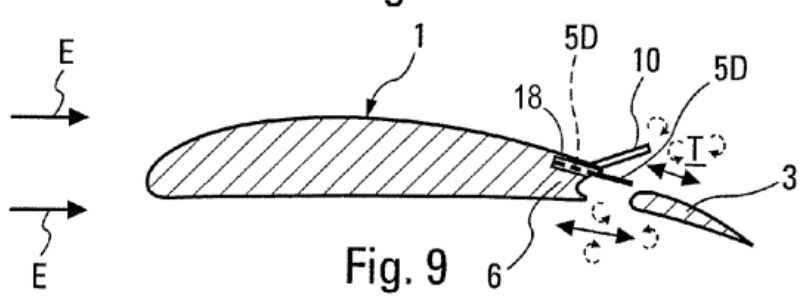

Fig. 9

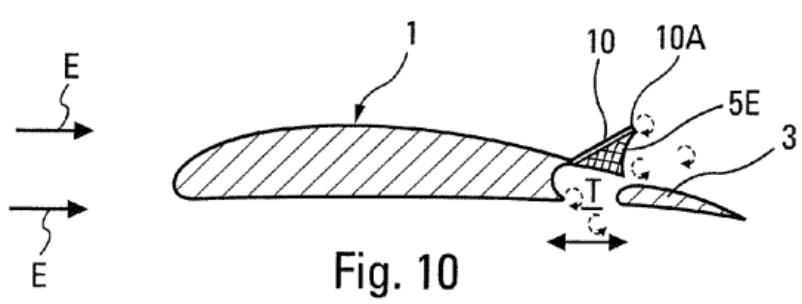

Fig. 10

In another variation of the second exemplary embodiment represented on FIG. **8**, two adaptive nets **5**C, extending along the strut **7**, are arranged respectively on the downstream end of the external side walls **7**B of the strut **7**. Each net **5**C is fastened to the corresponding side wall **7**B via the upstream end **19** of each net **5**C.

The adaptive nets **5**C are held in an extended position for which they are arranged in the turbulence area T using an extension device, for example an elastic type member that spontaneously biases or forces the nets **5**C into the extended position in the absence of an air flow.

Moreover, depending upon the airplane speed and under the action of the airflow E, the nets **5**C are able to occupy a plurality of intermediate positions between the extended position and a retracted position (in which each net **5**C is pressed against the corresponding side wall **7**B of the strut **7**). Thus, the higher the speed of the airplane, the bigger the air flow E pushing on the nets **5**C and the lesser the nets **5**C are extended.

In such a way, an automatic adjustment of the position of the nets **5**C as a function of the airplane speed (a speed threshold can be implemented by the design of the extension device) is performed so as to avoid a degradation of the performances of the latter during the flight (including upon a cruising phase) while reducing aerodynamic noise when it is useful (for example upon a take off or an approach phase).

Furthermore, on FIG. **9**, there are illustrated according to the third exemplary embodiment of the invention, a cross-section of the aircraft wing **1** provided with a trailing edge flap **3** and an airbrake **10** (represented in an extended position).

DETAILED DESCRIPTION OF THE INVENTION/ UTILITY MODEL

TIPS IN DRAFTING DETAILED DESCRIPTION:

2. A patent application does not need to be a blueprint of the technology and at least one court even stated that a patent should preferably "omit" things that are well-known in the art.

Describe in detail the elements of the invention:

1. at least one sensor disposed in a vehicle adapted to detect an unauthorized condition in or about said vehicle and for generating an alarm signal in response thereto;

2. a transceiver operatively connected to said sensor adapted for transmitting said alarm signal;

3. an imaging device disposed in said vehicle and operatively connected to said transceiver, for imaging at least a portion of an occupant of said vehicle upon selective activation by at least said alarm signal;

4. a two-way voice communication system disposed within said vehicle and operably connected to said transceiver; and

5. a receiver adapted for reception of said signal from said transceiver and disposed remotely therefrom, said receiver being adapted to display at least one of a still image and a streaming video of said imaging device, wherein said receiver is adapted to activate said two-way voice communication.

ICT Example
(Detailed Description)

Excerpt from the Detailed Description describing the food ordering app and restaurant

US10043173B2 US9715685B2

The **food-ordering app** may be restaurant chain-specific (e.g., the app can be used to order food from any "Brand X" restaurant.) The food-ordering app may be specific to a **group of restaurant chains**, such as a group of restaurant chains that are commonly owned (e.g., chain X and chain Y both owned by the same company). The food-ordering app may be specific to one or more individual restaurants 112. The food-ordering app may have a "default restaurant" setting, enabling the food-ordering app to choose a default restaurant 112. The food-ordering app may default to choosing the participating restaurant 112 closest to at least one of the customer's current location, the customer's destination, and the customer's intended travel route.

Excerpt from the Detailed Description describing the customer location and mapping app

US10043173B2 US9715685B2

The **current location** may be obtained from a GPS unit or may be obtained from the customer 102. The customer's destination may be obtained from the customer 102. “Web mapping” or “web GIS” is the process of using a map delivered by a geographical information system (GIS). One or more of the customer's current location, the customer's destination, and the customer's intended travel route may be obtained from a **mapping app** using a web GIS system (e.g., Google Maps). The mapping app may be integrated within the food-ordering app, may be a separate app executing on the mobile communications device 106, or may be an app executing on a separate device (e.g., a dashboard computer within the vehicle 104).

Excerpt from the Detailed Description describing the payment options

US10043173B2 US9715685B2

Whether the food order is placed by voice input or manual input into the food-ordering app, the customer **102** may choose one or more **payment options**. The customer **may choose to pay at the restaurant 112**. The customer **may choose to pay with one or more of a credit card account, a stored value account (e.g., a gift card), or a payment service (e.g., Google Wallet or Apple Pay), etc.**

Detailed Description For Food/Chemical Fields

“For Chemical Inventions, test results (clinical test, pharmacological test, etc.), experimental evidence, working examples, analysis, and evaluation shall be included in the Detailed Description (enablement)”

University of Science and Technology of Southern Philippines

Technology Promotions and Commercialization Office

Thank you for Listening!

Engr. Clark Darwin B. Gozon
ITSO Technical Expert
clarkdarwin.gozon@ustp.edu.ph

P UM TM © ID