Claims Drafting

Prepared by: **Engr. Clark Darwin M. Gozon**
ITSO Technical Expert
Clarkdarwin.gozon@ustp.edu.ph

Innovation and Technology Support Office
ustp.itso@ustp.edu.ph

WHAT DO YOU REGARD AS YOUR INVENTION

Claim your property!

Claim drafting / writing

- Represent the heart of the patent application and is considered as the most important part of patent document
- Define the scope of protection given to an invention
- Are usually the first and sometimes the only parts of patent application actually reviewed by the patent examiner
- Being read by lawyers and judges during legal proceedings such as patent invalidation and/or infringement case
- Being read by researchers, competitors and the public

CLAIM

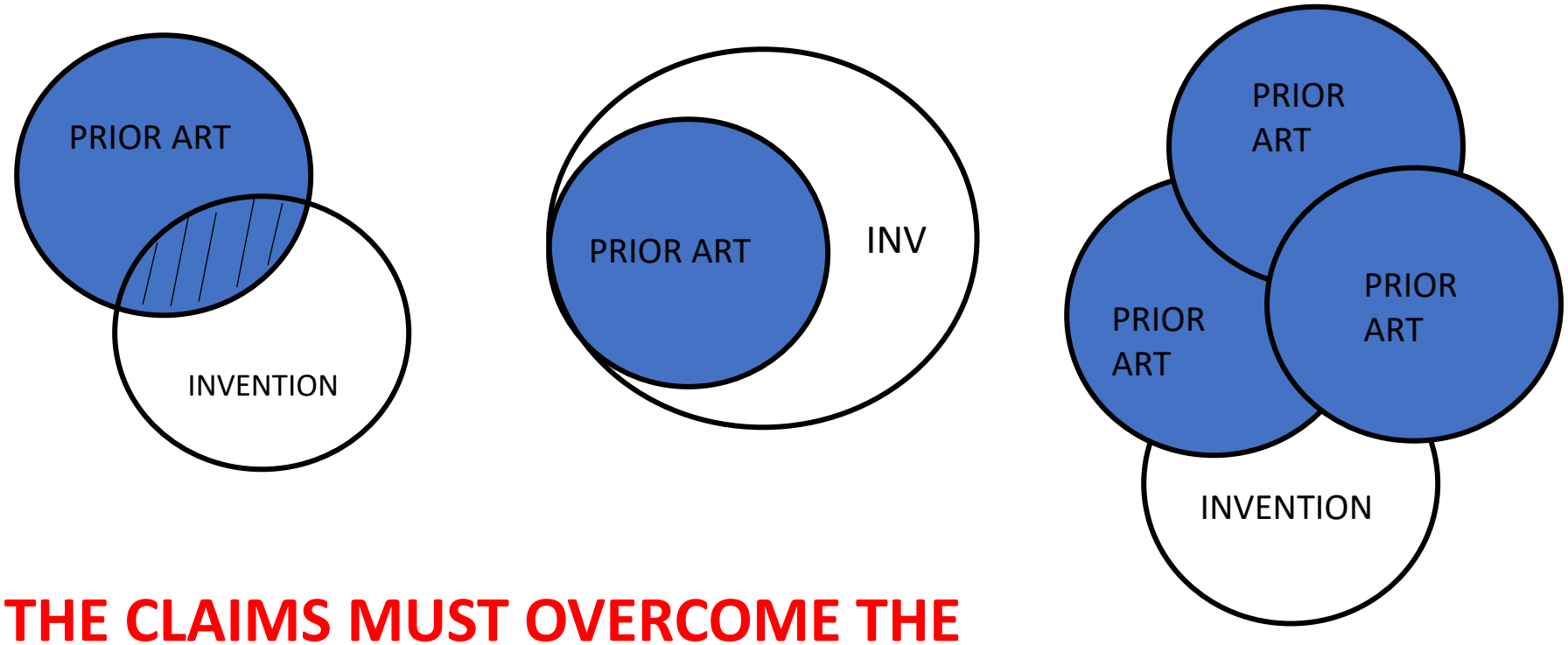

THE CLAIMS MUST OVERCOME THE PRIOR ART, OTHERWISE INVALID.

Claim drafting / writing

- Is an art, not a precise science.

- There is NO best claim.

- So long as the goals of claim drafting are achieved, any claims will suffice.

Strategy on Claim Drafting :

- **The goal of patent prosecution is:**

to obtain allowance of the broadest claims that do not encompass prior art.

- **the claims should cover all suggested embodiments, and**

- **all relevant categories of patentable matters related to the invention.**

- **the most common tactic is:**

  to include a range of claims of varying scope,

  so that the patentee;
  can initiate enforcement proceedings based on the narrowest claim that covers the accused infringer.

A CLAIM MUST BE?

1. clear and concise to avoid speculating what is the claim invention all about.

2. complete to include all the inventive features and elements .

3. supported by the description the features and elements in the claims must be fully explained in the description.

Patent Vs Utility Model

- **Patent** – may contain more than one independent claim (product, process, use, etc) in one application, and corresponding dependent claims.

- **Utility Model** – Only one independent genus or generic claim is permissible. However, specific variations of the utility model may be claimed in a reasonable number of dependent claims in a single application.

PARTS OF A CLAIM

- A PREAMBLE
- TRANSITIONAL TERM
- THE BODY

A claim format must consists of:

1. A preamble, transitional term:

a 1st element ;
a 2nd element;
a 3rd element; and
a nth element.

} the Body

PARTS OF A CLAIM

THE PREAMBLE

- **Identifies the category of the invention**
  e.g. An apparatus; A device; An article; A composition; A method or process

- **May recite an object of the invention**
  e.g. An apparatus for cooking; A device for measuring the length; A non-motorized vehicles; A composition for treating dengue; A method for making tea;

- **In most cases it is consistent with the title of the invention but not all the time**

PARTS OF A CLAIM

TRANSITIONAL TERM

- Open term (standard term is "comprising")
  - including the following elements but not excluding others
  - expand the scope of the claim by allowing for other elements or limitations

- Less Open term (standard term is "consisting of")
  - "including", "containing", and "having"
  - limits the scope of the claim to only the recited elements

PARTS OF A CLAIM

THE BODY

- Must recite the elements (structures, parts, steps, ingredients) and limitation of the invention that applicant wants to be protected

- Explains how the different elements exist in relationship to one another

For example:

1. A wheelbarrow (10) comprising:

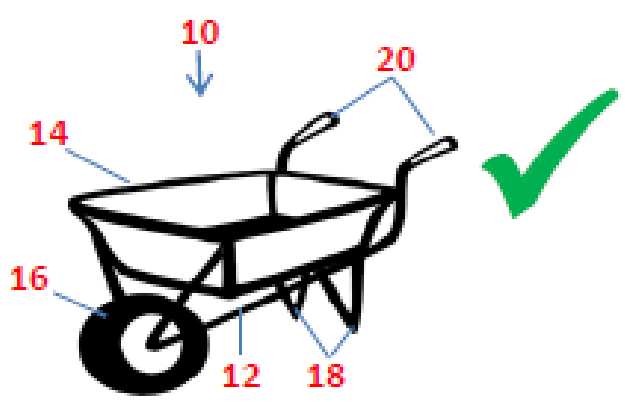

a frame (12);

a container member (14) secured to said frame;

a wheel (16) secured at the front portion of said frame;

at least two leg members (18) secured at the rear portion of said frame; and

a pair of handles (20) protruding upwardly from the container member.

SETS OF CLAIM

- **INDEPENDENT CLAIM**
  - CLAIMS THAT COULD STAND ALONE AND DOES NOT REFER TO OTHER CLAIM/S
  - BROADEST CLAIM

- **DEPENDENT CLAIM**
  - CLAIM OF THE SAME CATEGORY THAT INCLUDES ALL THE FEATURES OF THE PRECEDENT CLAIM
  - SPECIFIC CLAIM OR FALL BACK DURING EXAMINATION

SETS OF CLAIM

- **INDEPENDENT CLAIM**

1. A skewer aid device comprising:
   a round bar having a pointed tip at one end; and
   a tube integrally connected at the other end of said round bar.

- **DEPENDENT CLAIM**

2. The skewer aid device according to claim 1, wherein said tube is adapted to receive a bamboo stick to accommodate the food from said round bar.
3. The skewer aid device according to claim 1, wherein said round bar and said tube are made of stainless steel.
4. The skewer aid device according to claim 1, wherein said round bar having a smaller diameter than said tube.
5. The skewer aid device according to claim 1, wherein said tube having one end tapered to adapt to the size of said round bar

CLAIM CATEGORIES

1. Physical Entity

a. Apparatus (machine, device)

b. Product (structure, composition)

2. Activity

c. Method or Process (step by step process)

d. Use (medical and non-medical use)

APPARATUS CLAIM

What is claimed is:

1. A skewer aid device comprising:

a round bar having a pointed tip at one end; and

a tube integrally connected at the other end of said round bar.

2. The skewer aid device according to claim 1, wherein said tube is adapted to receive a bamboo stick to accommodate the food from said round bar.

3. The skewer aid device according to claim 1, wherein said round bar and said tube are made of stainless steel.

4. The skewer aid device according to claim 1, wherein said round bar having a smaller diameter than said tube.

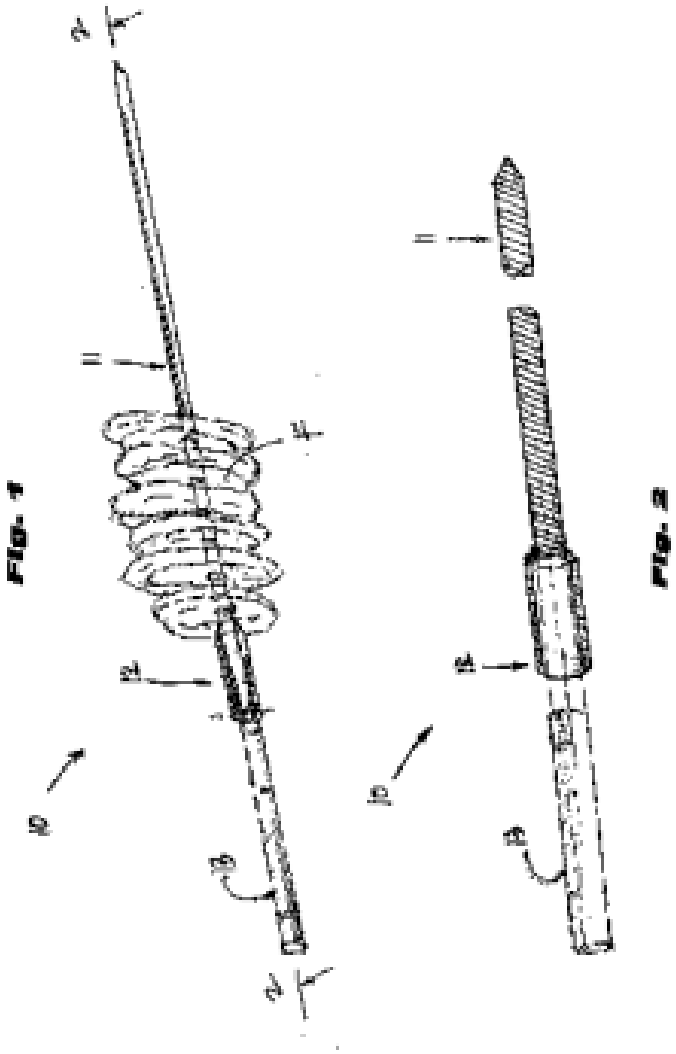

UNIVERSITY OF ANTIQUE
Applicant
By:
JESSIE R. DAGOHOY
Dean, College of Technology

PRODUCT CLAIM

What is claimed is:

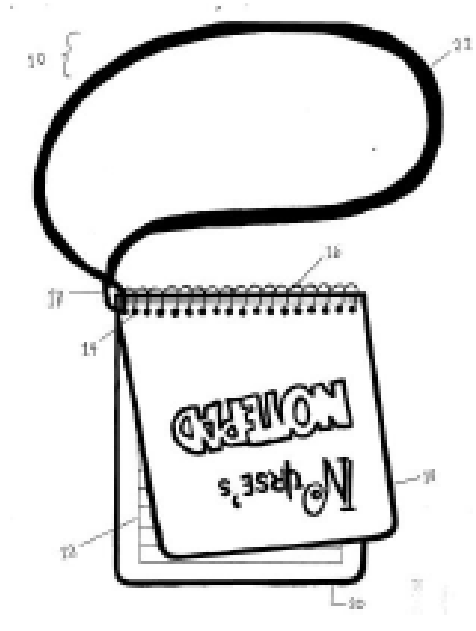

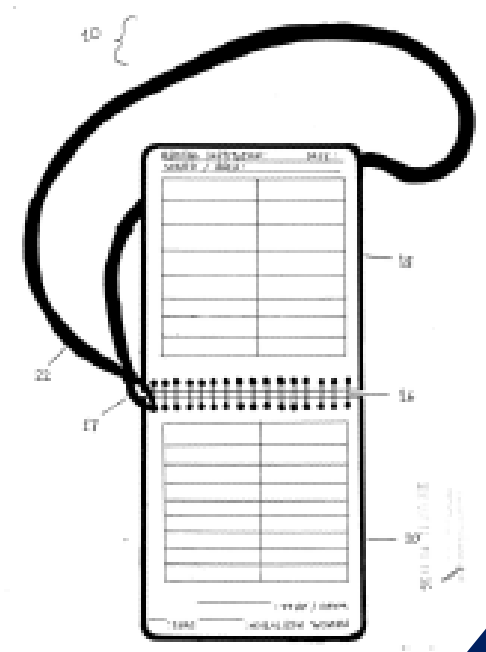

1.A notepad for medical practitioner comprising :

a plurality of sheets each having a series of aligned perforations at the top edge;

a coil of wire spirally wound through said perforations loosely holding the sheets together forming thereon a pad, the pad includes front and back sheets loosely engage to said coil covering the plurality of sheets; and

a sling integrally attached to said coil adapted to be hanged into the neck of the medical practitioner.

2. The notepad according to claim 1, wherein each sheets having a designed content.

PRODUCT CLAIM

What is claimed is:

1.A composition of mosquito larvicide comprising the following weight ratio:

1 to 100 grams *Bacillus thurigiensis israelensis* endotoxin to each 1 liter of water and 5 kilograms of silicate granules.

2. The composition according to claim 1, wherein the silicate granules have a diameter of 2-20 mm.

METHOD OR PROCESS CLAIM

What is claimed is:

1. A process of producing mosquito larvicide comprising the (following) steps (of):

   a. mixing 1 to 100 grams of *Bacillus thuringiensis israelensis* with 1 liter of tap water in a mixing vessel;
   b. putting 5 kilograms silicate granules in a container;
   c. pouring the mixture of *Bacillus thuringiensis israelensis* and tap water in the container containing the silicate granules; and
   d. stirring thoroughly until the mixtures will be absorbed by the silicate granules.

USE CLAIM

1.) The use of substance X as an insecticide

as equivalent to a "process claim"

"A process of killing insects using substance X"

Other example

1.) The use of a transistor in an amplifying circuit

as equivalent to a "process claim"

"A process of amplifying using a circuit containing the transistor"

and should not be interpreted as

"An amplifying circuit in which the transistor is used"

Claims Drafting
MECHANICAL/ELECTRICAL

RULES IN CLAIM DRAFTING

Naming of specific elements or parts is a must and consistent throughout the claim

- **handle, grip member, holder, holding member, rotating element, rotating member, fastening member, connecting member, etc.**

FOR EXAMPLE:

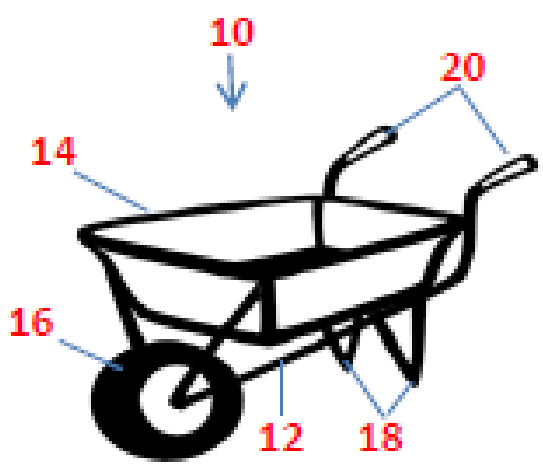

1. A Wheelbarrow (10) comprising:

a frame (12);
a container member (14) secure to said frame (12);
a wheel (16) secure at the front portion of said frame (12);
at least two leg members (18) secure at the rear portion of said frame (12); and
a pair of handles (20) protruding upwardly from the container member (14).

RULES IN CLAIM DRAFTING

The claim elements may include reference numerals as shown in the drawings to increase understanding of the claim

- **the numeral must be enclosed by parentheses**

FOR EXAMPLE:

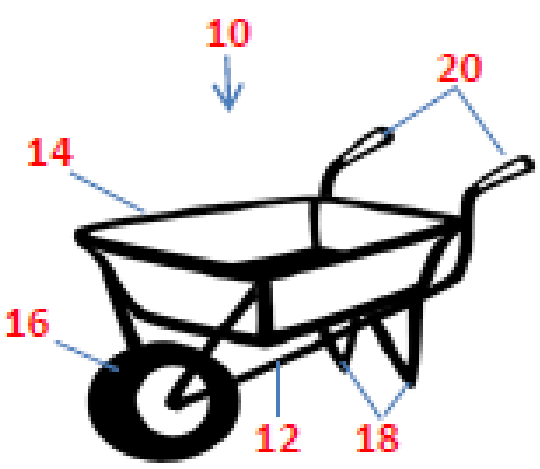

1. A Wheelbarrow (10) comprising:

a frame (12);
a container member (14) secure to said frame (12);
a wheel (16) secure at the front portion of said frame (12);
at least two leg members (18) secure at the rear portion of said frame (12); and
a pair of handles (20) protruding upwardly from the container member (14).

RULES IN CLAIM DRAFTING

The elements must be introduced positively or directly with proper antecedent basis within the claim

- **use indefinite article "a" or "an" when introducing an element for the first time**
- **use definite article "the" or "said" when referring back to the introduced element**

FOR EXAMPLE:

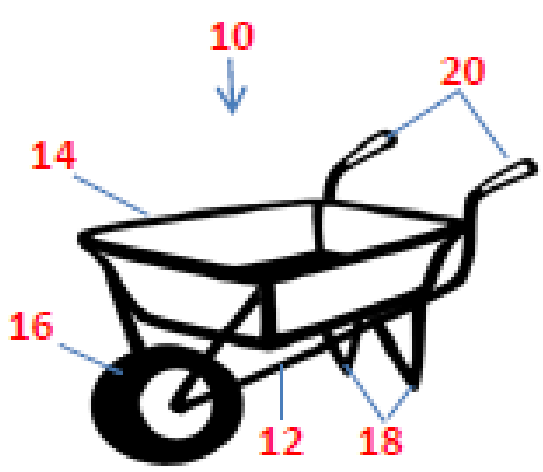

1. A Wheelbarrow (10) comprising:

a frame (12);
a container member (14) secure to said frame (12);
a wheel (16) secure at the front portion of said frame (12);
at least two leg members (18) secure at the rear portion of said frame (12); and
a pair of handles (20) protruding upwardly from the container member (14).

RULES IN CLAIM DRAFTING

Plural elements must be in proper term

- **such as; a plurality of strings; at least one arm; at most three**

FOR EXAMPLE:

1. A Wheelbarrow (10) comprising:

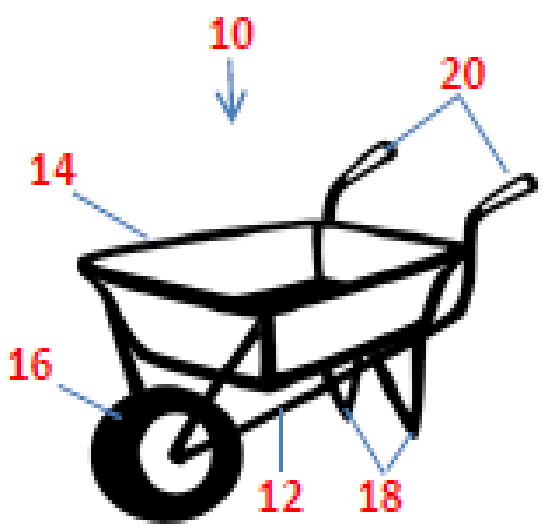

a frame (12);
a container member (14) secure to said frame (12);
a wheel (16) secure at the front portion of said frame (12);
at least two leg members (18) secure at the rear portion of said frame (12); and
a pair of handles (20) protruding upwardly from the container member (14).

RULES IN CLAIM DRAFTING

- **Claim should not be a mere listing of parts/elements or an aggregation**

For example:

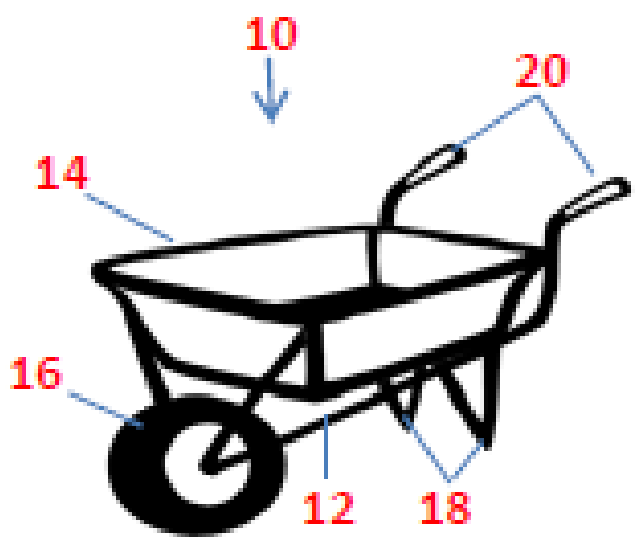

1. A wheelbarrow (10) comprising:

a frame (12);

a container member (14;

a wheel (16);

at least two leg members (18); and

a pair of handles (20.

RULES IN CLAIM DRAFTING

Must be in a single sentence form either in one paragraph form or small paragraphs, i.e. starting with a capital letter and ending up with a period

- **use comma, colon, and semi-colon as the separation**
- **use "and" prior to the last element**

FOR EXAMPLE:

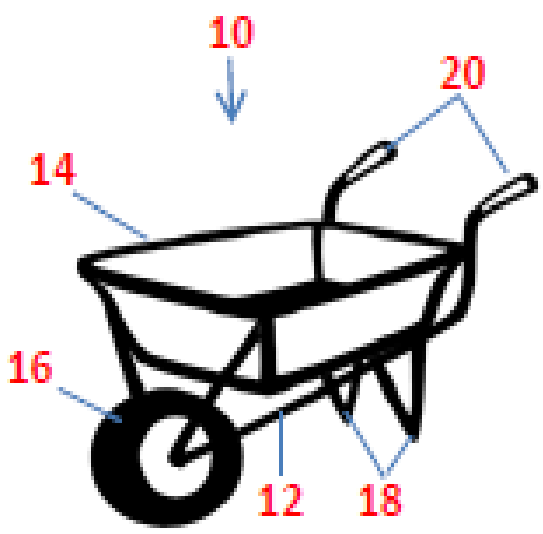

1. A Wheelbarrow (10) comprising:
   a frame (12);
   a container member (14) secure to said frame (12);
   a wheel (16) secure at the front portion of said frame (12);
   at least two leg members (18) secure at the rear portion of said frame (12); and
   a pair of handles (20) protruding upwardly from the container member (14).

RULES IN CLAIM DRAFTING

Use of special words to further define a structure or provide a function associated with a given structure

- **such as "wherein", "whereby", "such that"**

FOR EXAMPLE:

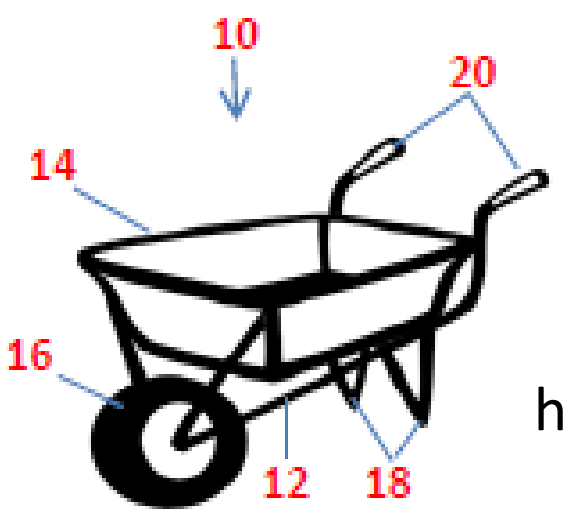

1. A Wheelbarrow (10) comprising:
a frame (12);
a container member (14) secure to said frame (12);
a wheel (16) secure at the front portion of said frame (12);
at least two leg members (18) secure at the rear portion of said frame (12), whereby said leg member adapted to burrow and hold to the ground; and
a pair of handles (20) protruding upwardly from the container member (14).

RULES IN CLAIM DRAFTING

Inferential claiming is not allowable

- **an element must not be inferentially introduced in a claim featuring another element as its subject**

For example:

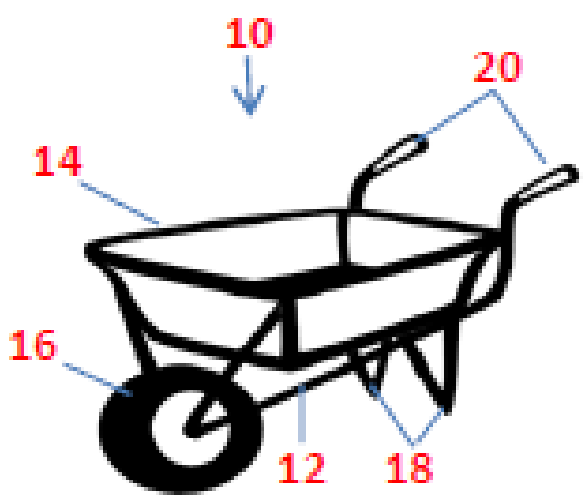

1. A wheelbarrow (10) comprising:

✗ **a container member (14) secured to a frame (12);**

✓ **a frame (12);**
a container member (14) secured to said frame;

RULES IN CLAIM DRAFTING

Relative terms (adverbs and adjectives) are indefinite

- **closely spaced; big container; thick leg support; short rod; and substantial distance**

FOR EXAMPLE:

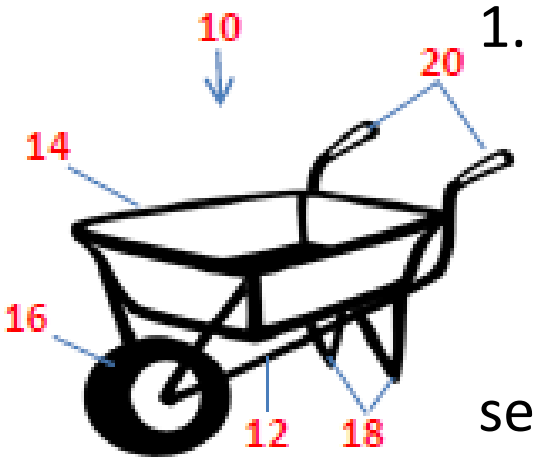

1. A Wheelbarrow (10) comprising:

a frame (12);

a big container member (14) secure to said frame (12);

a wheel (16) secure at the front portion of said frame (12);

at least two leg members (18) closely spaced to each other and secure at the rear portion of said frame (12), whereby said leg member adapted to burrow and hold to the ground; and

a pair of handles (20) protruding upwardly at at substantial distance from the container member (14).

RULES IN CLAIM DRAFTING

However, the relative terms (adverbs and adjectives) if used in a way that more definitive is acceptable

- **more than the minimum; the first rod being shorter than the second rod; the diameter of first tube is smaller that the second tube**

FOR EXAMPLE:

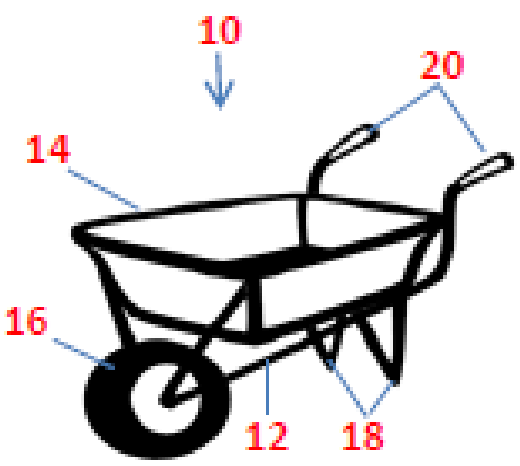

1. A Wheelbarrow (10) comprising:

a frame (12);

a container member (14) being sized to secure to said frame (12);

a wheel (16) secure at the front portion of said frame (12);

at least two leg members (18) spacedly arranged from the side edges and secure at the rear portion of said frame (12), whereby said leg member adapted to burrow and hold to the ground; and

a pair of handles (20) protruding upwardly at proximate distance from the rim of the container member (14).

RULES IN CLAIM DRAFTING

Hedged expressions are rejected

- **"a gripping means, such as a handle, for.." attempts to recite both an independent claim and a narrower dependent claim in one claim, must be treated as two claims**

FOR EXAMPLE:

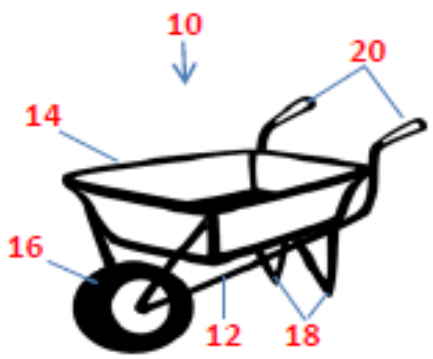

1. A Wheelbarrow (10) comprising:
a frame (12);
a container member (14) secure to said frame (12);
a wheel (16) secure at the front portion of said frame (12);
at least two leg members (18) secure at the rear portion of said frame (12), and
a gripping means, such as a pair of handles (20) protruding upwardly from the container member (14).

a gripping means (20) protruding upwardly from the container member.
2. The wheelbarrow according to claim 1, wherein said a gripping means is a pair of handles.

RULES IN CLAIM DRAFTING

Avoid overly broad functional statements, some practitioners attempt to use functional language to claim a result or quality rather than a functional limitation

- **a wheelbarrow having a capacity of 1 ton per loading**

It will be rejected for failure to particularly point out and distinctly claim the structure

RULES IN CLAIM DRAFTING

CLAIMING EMPTY SPACES:

Past practice shied away from reciting an empty space as
a claim element, e.g., “hole”, “groove”, “aperture”, “recess”, “slot”, or “chamber”; instead, practitioners claimed them as features of a claim element

✗ *i.e. (A device comprising: a lever; a hole provided to the lever…)*

✓ *i.e. (A device comprising: a lever having a hole;…)*

RULES IN CLAIM DRAFTING

Two-part claim or Improvement type/Jepson form Claim

- 1. The general technical class of apparatus, process, etc. to which the invention relate and those technical features which are necessary for the definition of the subject matter are stated in the preamble as old positive elements but are part of the prior art;

- 2. A characterizing portion preceded by the expression, "characterized in that" or "characterized by" stating the technical features as new positive elements which, in combination with the old positive elements constitute the invention it is desired to protect.

RULES IN CLAIM DRAFTING

Two-part claim or Improvement type/Jepson form Claim

- **1. The general technical class of apparatus, process, etc. to which the invention relate and those technical features which are necessary for the definition of the subject matter are stated in the preamble as old positive elements but are part of the prior art;**

- **2. A characterizing portion preceded by the expression, "characterized in that" or "characterized by" stating the technical features as new positive elements which, in combination with the old positive elements constitute the invention it is desired to protect.**

RULES IN CLAIM DRAFTING

Two-part claim or Improvement type/Jepson form Claim

Example Two-part Claim:

1. A wheelbarrow (10) comprising a frame (12); a container member (14) secured to said frame (12), a wheel (16) secured at the front portion of said frame (12), and a pair of handles (20) protruding upwardly from said container member (14) characterized in that:
at least two leg members (18) being secured at the rear portion of said frame (12).

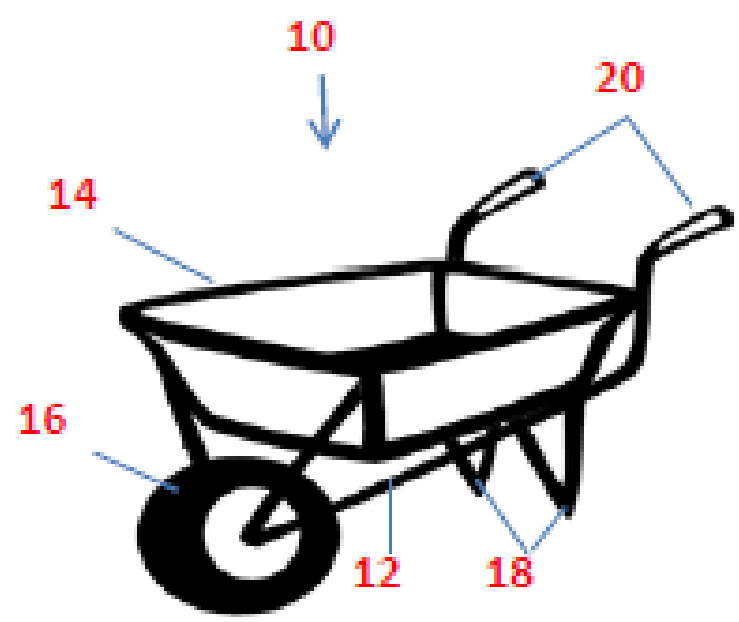

RULES IN CLAIM DRAFTING

Claim must have support in the specification and drawings

- **all the terms and phrases stated in the claims must have proper antecedent basis**

Suggestion:

Make the claims almost verbatim in the description by "COPYING the claims and PASTE in the description" then expound each element.

COMMON TERMS USED IN DRAFTING THE DESCRIPTION AND CLAIMS

It is a combination of legal and technical terms.

1. Conjunctive adverbs starting with “there”:
   a. thereof, thereto, therein, therefor, therefrom, etc.

2. Technical Terms used to describe and name elements:
   a. “reciprocating”, “rotating”, “sliding”, “tilting”

   b. “distal”, “proximate”, “intermediate”, “top portion”, “below”, “transverse” etc. (describing the position of elements)

   c. “projecting”, “extending“, “protruding” (describing relationship of features)

COMMON TERMS USED IN DRAFTING THE DESCRIPTION AND CLAIMS

d. “flange”, “shoulder”, “neck”, “rib”, “circumferential”, “longitudinal” (to describe certain form or configuration)

3. Usual terms to connect parts or elements:

a. “disposed at/on”, “pivotably connected”, “screwably connected”, fixedly held, slidably held/secured, rotatably connected, mounted on, mounted to, connected to, etc.

VERB + ...ally..... ably.... able

FIVE STRUCTURED STAGES OF CLAIM DRAFTING

Invention: A single-wheeled wheelbarrow

Prior art: three and four-wheeled carts (assumption)

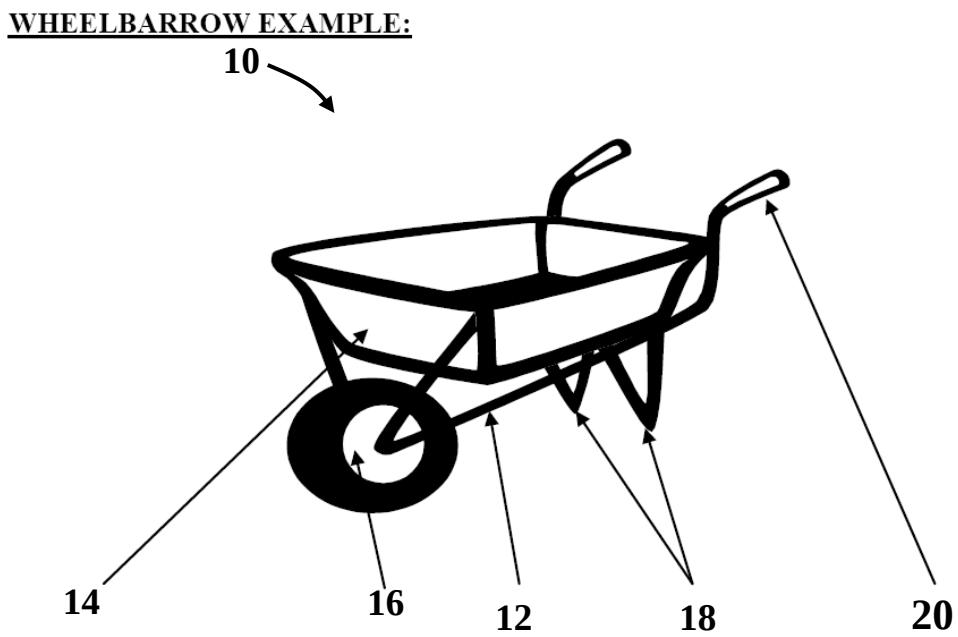

Stage 1: What is the "core" of the invention

Stage 2: Identify fundamental structural elements

Stage 3: Select broad terminology for each element and identify its relationship to other elements

Stage 4: Draft the claim/s

Stage 5: Claim review and revision

EXERCISE: Find the defects.

Claim: (Narrow)

1. A device for measuring the dimension of an object, the device comprising:

   a rigid wooden body being provided with an inch scale and centimeter scale opposing said inch scale wherein the body is 12 inches long; and

   an aluminum plate attached at one end of said body.

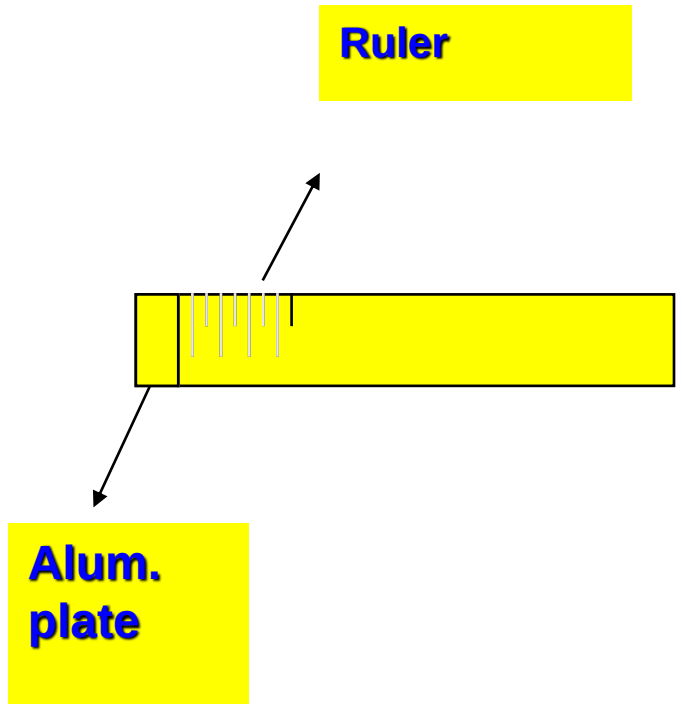

Broad Vs. Narrow Claim

Claim: (Broad)

1. A measuring device comprising:

an elongated body being provided with a scale; and

a metal plate attached at the end of said body.

2. The device according to claim 1, wherein said scale indicates measurement in inches and centimeters.

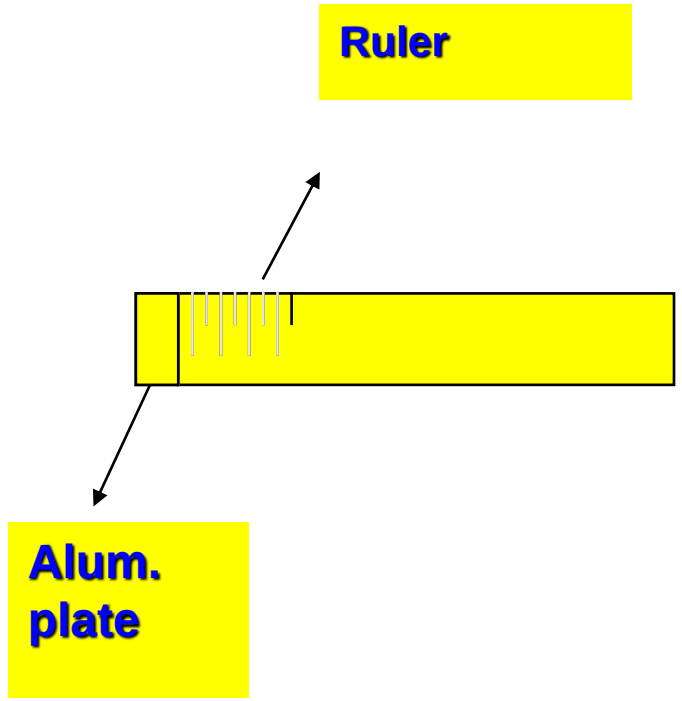

Broad Vs. Narrow Claim

The patent office (Examiner) has no duty to tell the patent agent or the inventor that broader claims are possible. The patent office only awards the claims that it receives – it will not object to narrow claims.

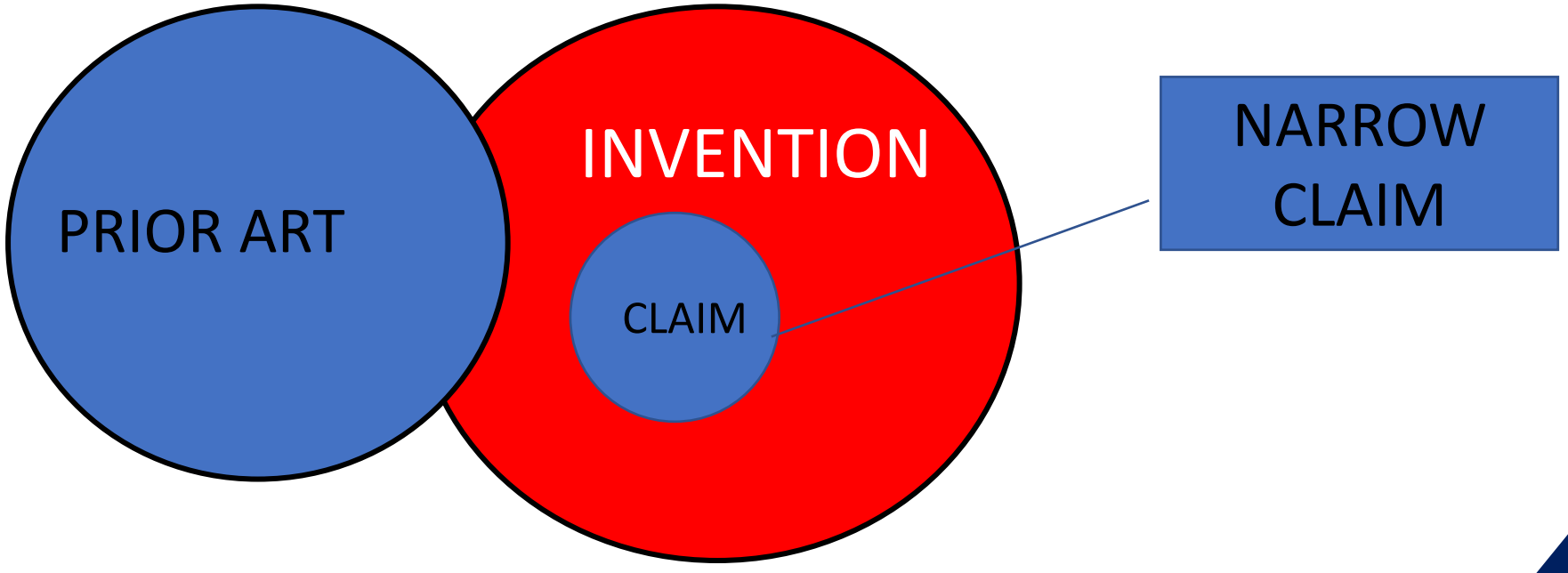

EXERCISE: Find the defects.

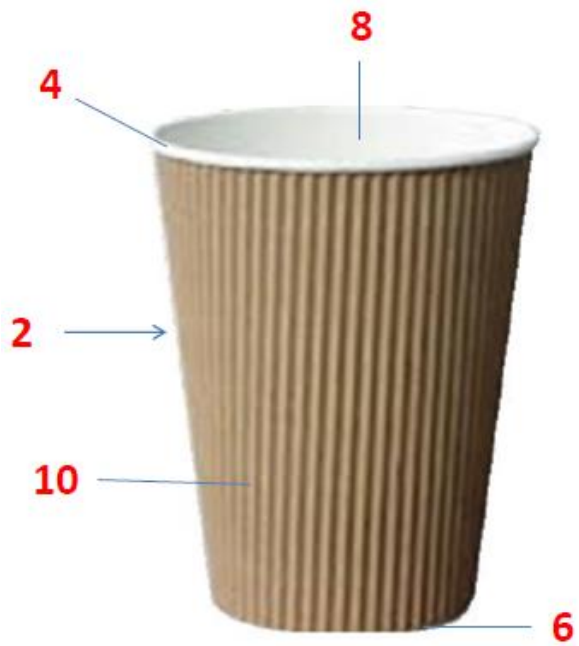

1. A paper cup for hot beverages consisting;

a body 2;

circumferential grooves 10 wrapped around the outer side of said body 2;

a rim 4 formed by rolling on the top portion of the said body 2;

a base wall 6 attached to said body by folding;

a hydrophobic film 8 layered to the inner side of said body;

2. A paper cup for hot beverages according to claim 1, wherein hydrophobic film 8 may be applied through spraying and/or brushing.

3. A paper cup for hot beverages according to claim 1, wherein the body 2 can hold 1-2 liter of liquid.

EXERCISE: Find the defects. Ans.

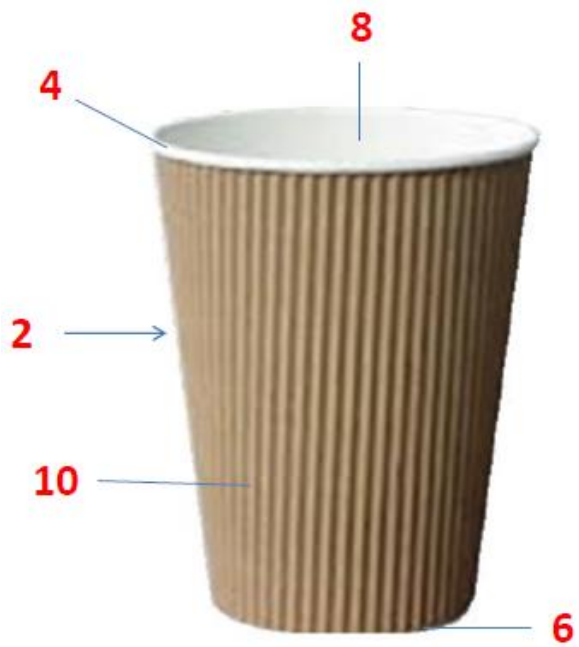

1. A paper cup for hot beverages comprising:

a body (2);

a circumferential grooves (10) wrapped around the outer side of said body (2);

a rim (4) formed by rolling on the top portion of the body (2); and

a base wall 6 attached to said body by folding;

a hydrophobic film (8) layered to the inner side of said body (2).

2. A paper cup for hot beverages according to claim (1), wherein hydrophobic film (8) is applied through spraying or brushing.

Claims Drafting
ICT

COMPUTER RELATED INVENTIONS (ICT/CII)

Examples (new applications):

- BUSINESS METHODS (online banking; online shopping;
online ticketing)
- INTERNET OF THINGS (smart traffic system; automated
lighting system)
- SOCIAL MEDIA (facebook; twitter; instagram; etc)
- ARTIFICIAL INTELLEGENCE (AI)

PATENTABLE INVENTIONS (SECTION 21)

3. COMPUTER-RELATED inventions, invention involves a computer, computer network or other programmable apparatus, with features realized wholly or partly by means of a computer program; and

Facebook's News Feed and Search Ranking Patents

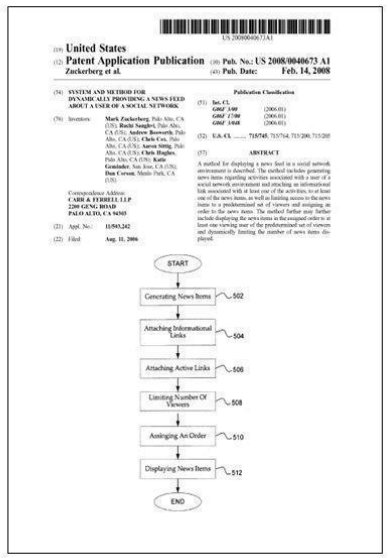

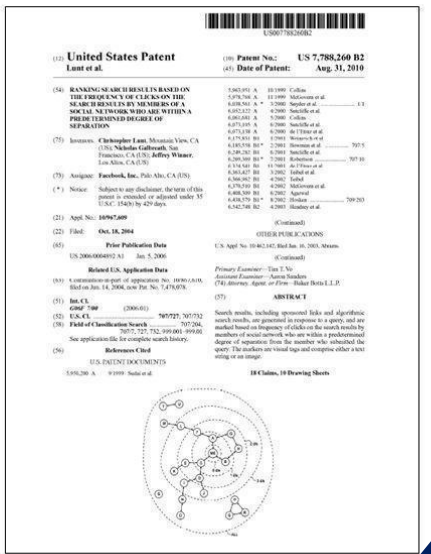

STATUTORY CLASSES OF INVENTIONS

(Section 21 IP Code)

Rule 201 of the IRR

Statutory Classes of Patentable Inventions

A patentable invention may be or may relate to:

(a) A product, such as a machine, a device, an article of manufacture, a composition of matter, and a microorganism;

(b) A process, such as a method of use, a method of manufacturing, a non-biological process, a microbiological process;

(c) Computer-related inventions; and

(d) An improvement of any of the foregoing.

NON-PATENTABLE

Software has an intriguing and unique property

It can be used to implement non-patentable inventions of Sec. 22 of IP Code

- **Discoveries, scientific theories and mathematical methods;**
- **Schemes, rules and methods of performing mental acts, playing games**
- **or method doing business, and programs for computers;**

- so, **if all computer programs are allowed, the exclusions are circumvented**
- but if we **absolutely exclude** all computer programs, we **deny patenting to inventions that are undoubtedly technical**

"technical character"
criterium to find the way between these two extremes

Computer-Implemented Inventions (CII)

- Inventions involving computers, computer networks or other programmable apparatus having one or more prima facie novel feature/s that is realized wholly or partly by a computer program/s.

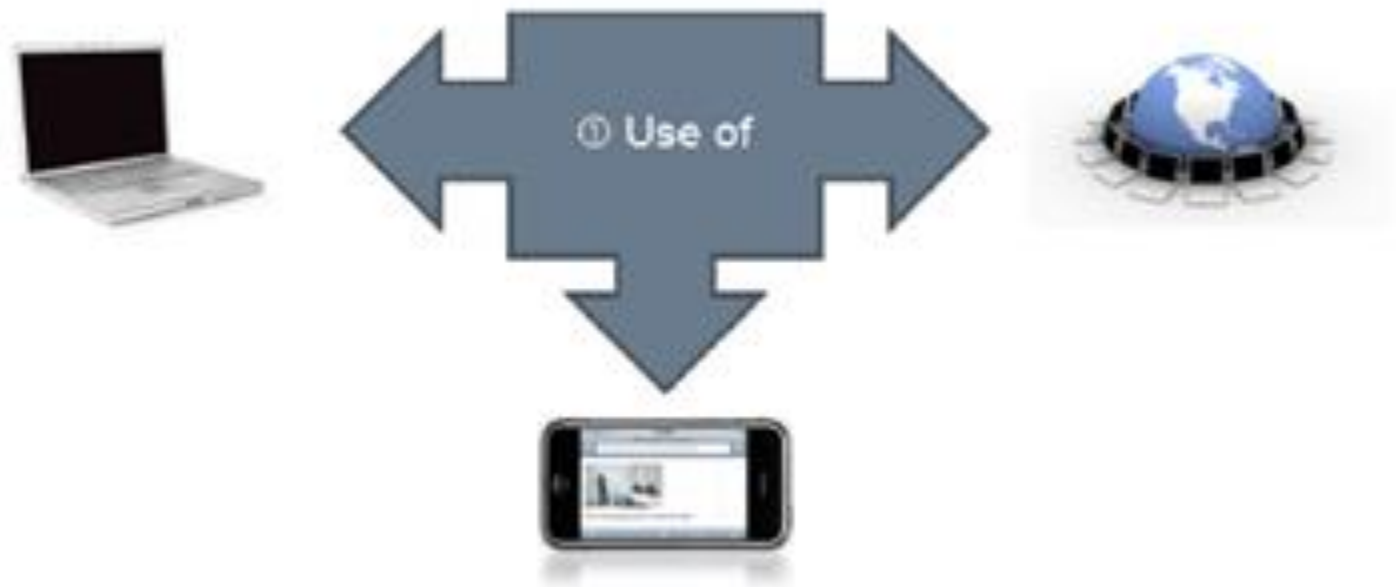

TECHNICAL CHARACTER

GUIDELINES ON THE EXAMINATION OF INFORMATION COMMUNICATIONS TECHNOLOGY AND COMPUTER-IMPLEMENTED INVENTIONS

January 2018

TECHNICAL CHARACTER

	Data structure shall mean any of various methods or formats (such as an array, file, or record) for organizing data in a computer *(from online Merriam-Webster Dictionary)*; **Firmware** shall mean computer programs contained permanently in a hardware device *(from online Merriam-Webster Dictionary)*; **Function** (in computing) shall mean a computer subroutine, and specifically one that performs a calculation with variables provided by a program and supplies the program with a single result *(from online Merriam-Webster Dictionary)*; **Further Technical Effect** shall mean as going beyond the "normal" physical interactions between program (software) and computer (hardware) *(from T 1173/97 (Computer program product/IBM) of 1.7.1998 of the Board of Appeals of the European Patent Office)*; **Hardware** shall mean the physical components, such as electronic and electrical devices, of an apparatus such as a computer *(from online Merriam-Webster Dictionary)*;

TECHNICAL CHARACTER

Factors that suggest technical character and weight towards eligibility of a ***Product Claim:***

- A man-made tangible embodiment (*device, apparatus, port, memory, processor, circuit boards, computer etc.*) with a real world use can be evidence of technical character.
- The tangible embodiment is utilized for a technical purpose and application in such a manner that implementation constitutes a technical solution to a problem.
- Technical solution means that computer-related technical aspects or considerations are applied in realizing the invention whereby tangible features provide substantial contribution in carrying-out the abstract idea.

If a computer program produces a "further technical effect" when carried out in a computer, a product which involves the computer program shall be regarded as providing substantial contribution in carrying out the abstract idea.

- The normal technical effect like flow of electrical current is not sufficient.
- Where information processing by a computer program, i.e. software is concretely realized by using hardware resources, " the said software is deemed to be exhibiting a "further technical effect". "Information processing by software is concretely realized by using hardware resources" means that, as a result of

ELIGIBLE PRODUCT CLAIM

Claim:

An **X-ray apparatus** having several X-ray **tubes**, characterized by a **computer** which stores **tube rating data** and uses the data to set **exposure parameters** for each tube, such that the optimum **exposure** is obtained for each tube without overloading anyone of them”

ELIGIBLE COMPUTER PROGRAM CLAIM

A computer readable medium containing a program that makes a **computer** operate as:

- a means for detecting differences of humidity readings made by **sensors** installed at plural locations; and
- a means for determining the breaking out of fire based on increasing rate of said difference of humidity reading.

INELIGIBLE

A method for evaluating leadership effectiveness, comprising the steps of:

- gathering target information quantifying at least one domain selected from the group consisting of having personal convictions, being visionary, building emotional bonds, being inspirational, being team oriented, being a risk taker and having a drive to excel;
- comparing the target information with a standard, the standard including standard values of the domain; and
- identifying non-standard responses of the target.

Trivial requirement

"A method of encouraging customers to be loyal buyers by giving a discount on future purchases."

non-technical

"A computer implemented method with a database of customers who have previously purchased goods for applying a discount to any subsequent purchase."

technical

ICT Example (Claims)

CLAIMING FOR METHOD

US10043173B2

1. A computer-implemented **method** for communicating a food order while a customer is driving a vehicle, **the method comprising**:

using one or more computer processors of a communications device:

creating a graphical user interface (GUI) that is output to a display of the communications device;

receiving a manual input from an input device, the input relating to one or more GUI elements of the GUI, the input indicating partial information about a food order;

monitoring a speed of the communication device calculated based upon received data from one of an accelerometer or a global positioning system receiver of the communication device;…XXX…

CLAIMING FOR MOBILE DEVICE

US10043173B2

8. A communication device for communicating a food order while a customer is driving a vehicle, **the communication device comprising**:

a computer processor;

a memory, comprising instructions, which when executed by the computer processor, causes the computer processor to perform operations comprising:

creating a graphical user interface (GUI) that is output to a display of the communications device;

receiving a manual input from an input device, the input relating to one or more GUI elements of the GUI, the input indicating partial information about a food order;

monitoring a speed of the communication device calculated based upon received data from one of an accelerometer or a global positioning system receiver of the communication device;…XXX…

CLAIMING FOR COMPUTER PROGRAM

US10043173B2

15. A **non-transitory machine-readable medium** comprising instructions, which when executed by a communication device, causes the communication device to perform operations comprising:

creating a graphical user interface (GUI) that is output to a display of the communications device;

receiving a manual input from an input device, the input relating to one or more GUI elements of the GUI, the input indicating partial information about a food order;

monitoring a speed of the communication device calculated based upon received data from one of an accelerometer or a global positioning system receiver of the communication device;

CLAIMING FOR COMPUTER PROGRAM

US10043173B2

15. A **computer-readable medium** comprising instructions, which when executed by a communication device, causes the communication device to perform operations comprising:

creating a graphical user interface (GUI) that is output to a display of the communications device;

receiving a manual input from an input device, the input relating to one or more GUI elements of the GUI, the input indicating partial information about a food order;

monitoring a speed of the communication device calculated based upon received data from one of an accelerometer or a global positioning system receiver of the communication device;

Claims Drafting
CHEMICAL

Common Inventions Seen in Chemical Field

Composition

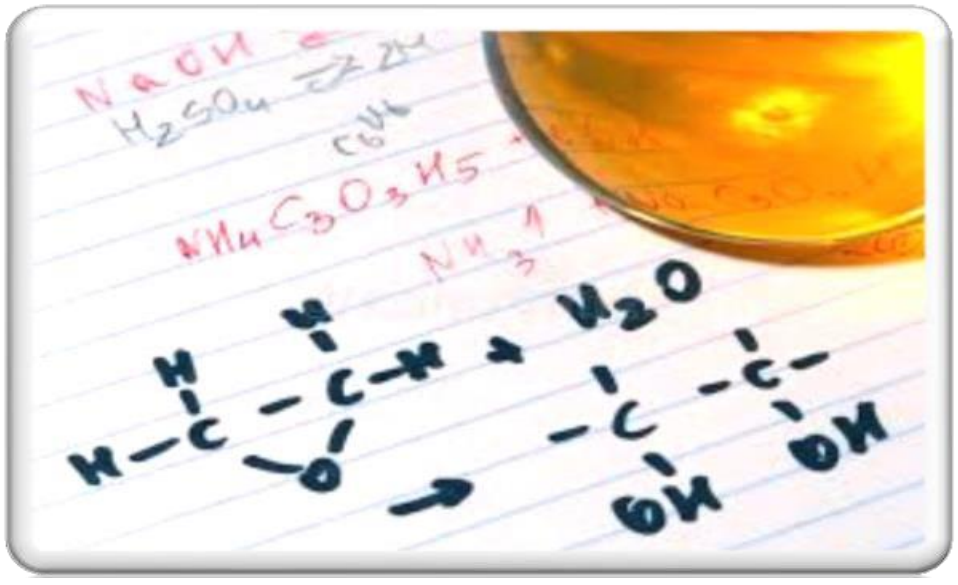

Process

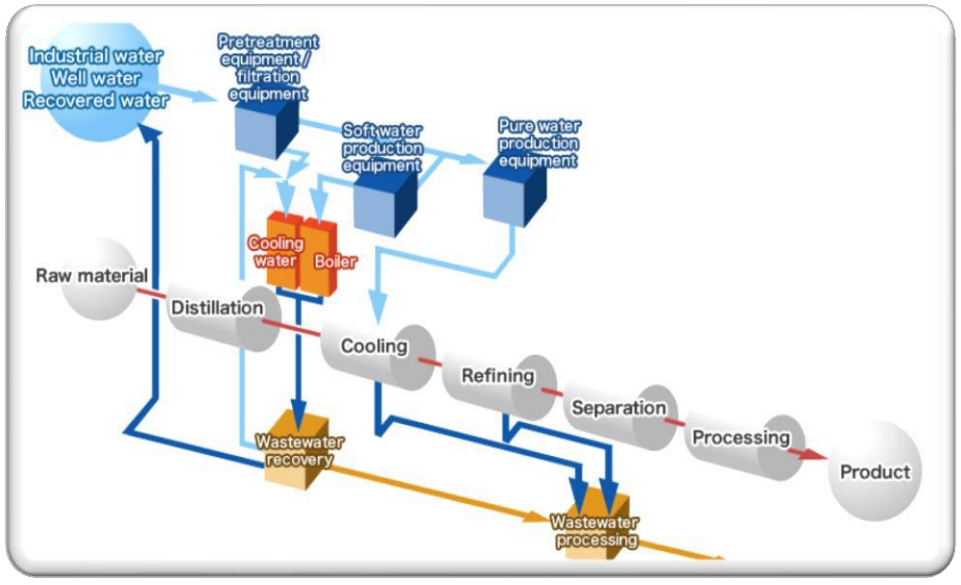

Patent = **NOVEL** + **INVENTIVE** + **INDUSTRIALLY APPLICABLE**

Brief Description of the Drawings

Figure 1 is a side view of an embodiment.

Figure 2 is the microscopic depiction on how the invention works.

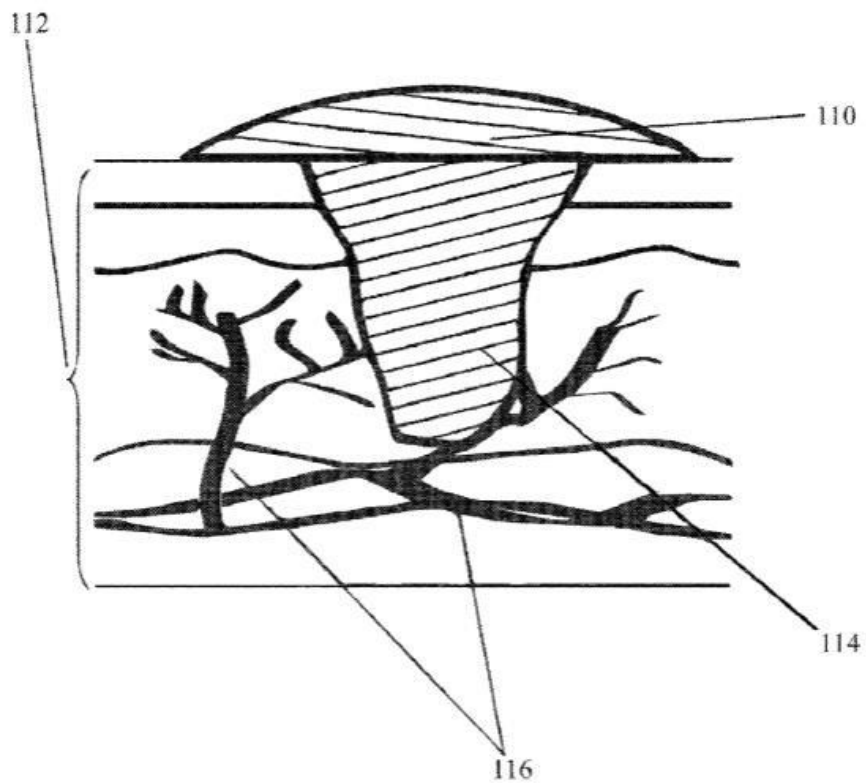

FIG. 1

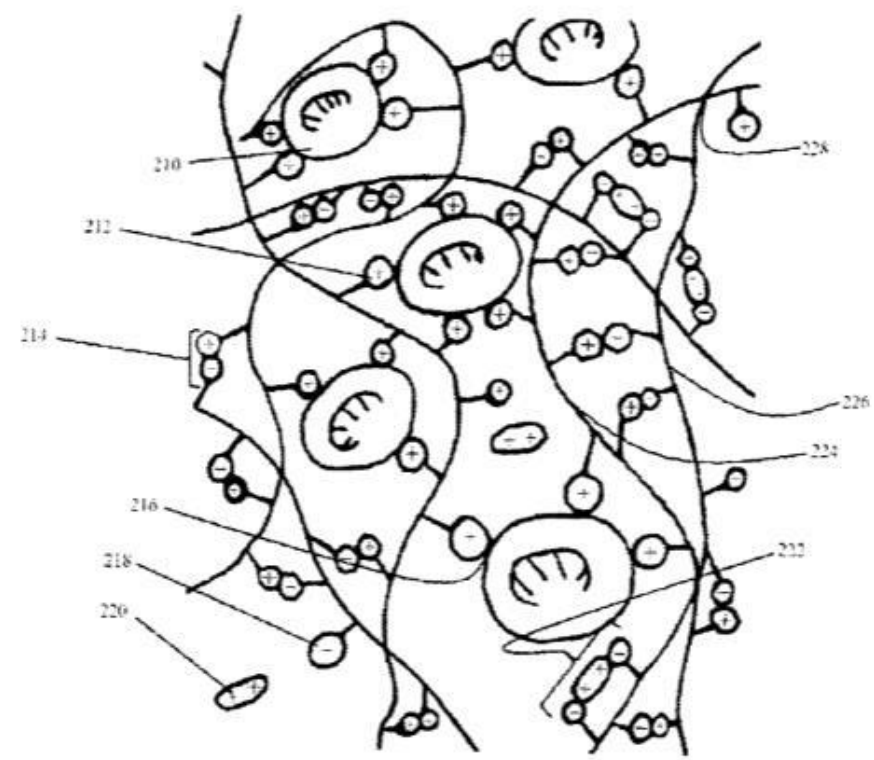

FIG. 2

Note: Drawings on Separate Sheet

Claims

A. Physical Entity

- Chemical compounds
- Compositions
- Product-by-process

B. Activity

- Process/method of manufacturing
- Use

Formulation & Composition Claims

1. **A composition for an herbal candy comprising of Lagundi leaf extract admixture with a carrier, flavoring, and adjuvant**.

1. **A formulation for an herbal candy comprising** :

		% weight
Lagundi leaves extract	-	5.0
Sugar	-	80.0
Glucose	-	7.5
Citric Acid	-	0.5
Corn Syrup	-	7.0
		100.0%

Product Composition Claims

1. **A formulation for an herbal candy comprising** :

		% weight
Lagundi leaves extract	-	5 - 10
Sugar	-	80 - 90
Glucose	-	5 - 10
Citric Acid	-	0.1 – 1
Corn Syrup	-	6 – 15
		?????%

DUAL (A+B)

A = 10 - 20 wt%

B = 80 - 90 wt%

100 wt% **100 wt%**

MULTIPLE (A+B+C)

A = 0.1 to 20 wt%

B = 5 to 30 wt%

C = 20 to 60 wt%

– Sum of min values MUST NOT exceed 100%

– Sum of max values MAY exceed 100%

– Balance and calculate!

Independent Claims

INDClaim. **A composition for an herbal candy <u>comprising</u> of Lagundi leaf extract admixture with a carrier, <u>flavoring</u>, and adjuvant**.

2. **The composition for a herbal candy as in claim 1**, wherein **said herbal candy** is in the form of lollipop, candy drop or tablet.

3. **The composition as in claim 1**, wherein **said flavoring** is selected from the group consisting of chocolate, coffee, rum, mint, fruit flavorings.

Process Claims

The claim should begin with **PREAMBLE**

- method of making (a particular article), the method comprising:

• the “elements” are actions, which manipulates or transform an article or work piece

• a verb phrased as a gerund
example:
- mix**ing** the components
- hea**ting** the mixture
- coa**ting** with sugar paste

Process Claims

1. A method of making Lagundi cough medication in lollipop form, the method comprising:

(insert active steps)

Process Claims

Flow Chart

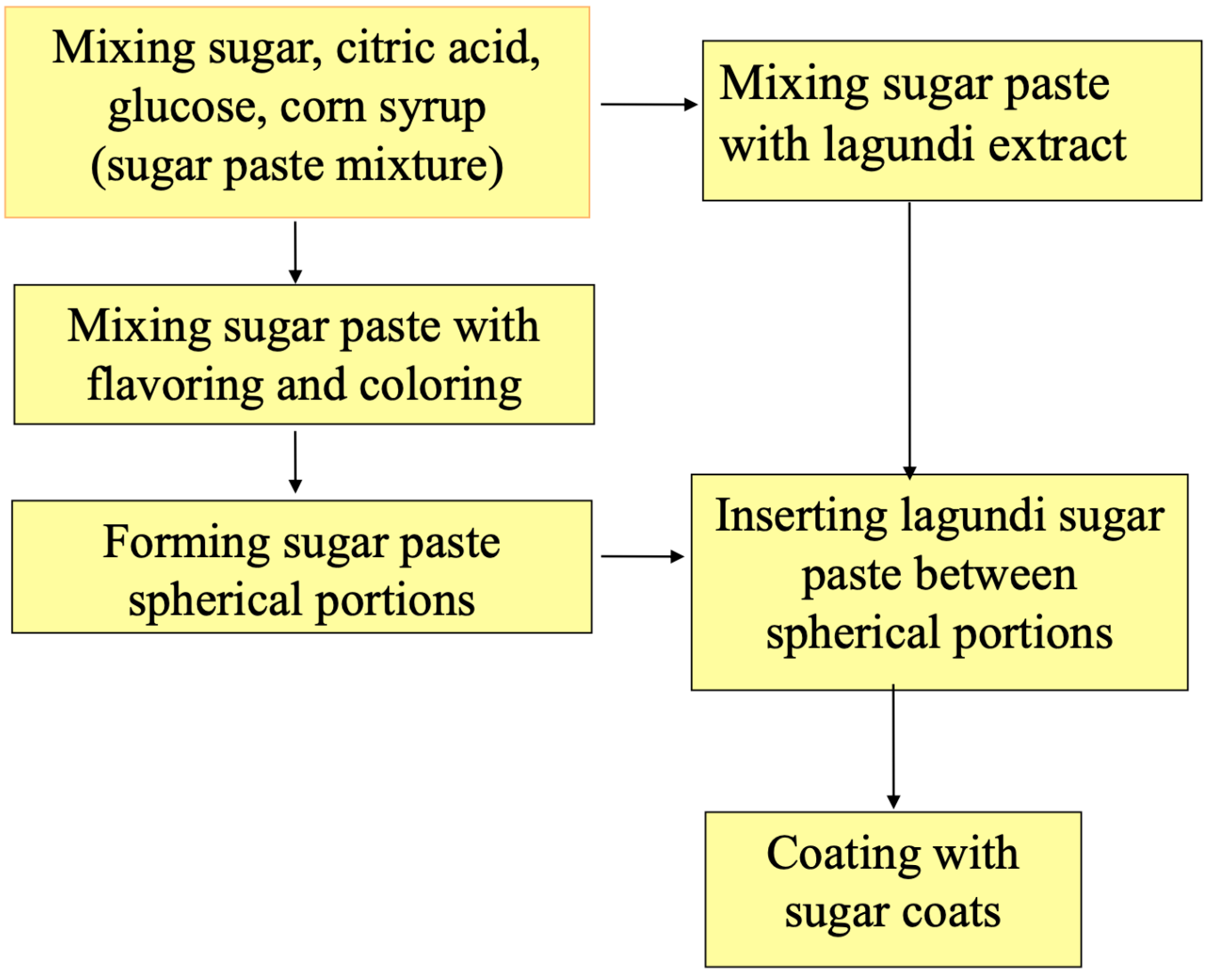

1. A method of making Lagundi cough medication in lollipop form, the method comprising:

(a) mixing sugar, citric acid, glucose, corn syrup to obtained a sugar paste mixture;
(b) mixing sugar paste mixture with lagundi extract;
(c) mixing the sugar paste mixture obtained in step (a) with flavoring and coloring;
(d) forming sugar paste spherical portions;
(e) inserting lagundi sugar paste obtained in step (b) between spherical portions in step (d); and
(f) coating with sugar coats.

Process Claims Exercise: Find the defects

1. A method of preparing a hard confectionery composition comprising the steps of:
   (a) mixing at least one bulking agent with water;
   (b) heating said mixture to a temperature from about 125° C to about 185° C until the mixture is sufficiently cooked;
   (c) cooling said mixture to about 100° C;
   (d) mixing with said mixture from about 0.1% to about 20% by weight of an active ingredient in the form of a caplet;
   (e) pouring said mixture into a mold;
   (f) allowing said mixture to set.

Process Claims (Improved)

1. A method of preparing a hard confectionery composition comprising the steps of:
   (a) mixing at least one bulking agent with water to form a mixture;
   (b) heating said mixture to a temperature from about 125° C to about 185° C until the mixture is sufficiently cooked;
   (c) cooling said of heated mixture to about 100° C;
   (d) mixing with said mixture in step (c) from about 0.1% to about 20% by weight of an active ingredient in the form of a caplet;
   (e) pouring said mixture obtained from step (d) into a mold; and
   (f) allowing said mixture from step (e) to set.

Thank you for Listening!

CLAIM DRAFTING EXERCISE

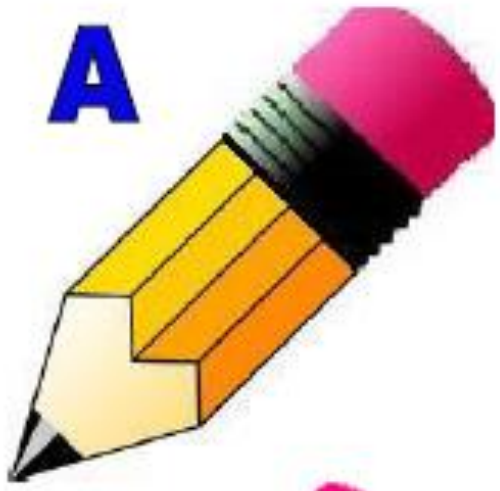

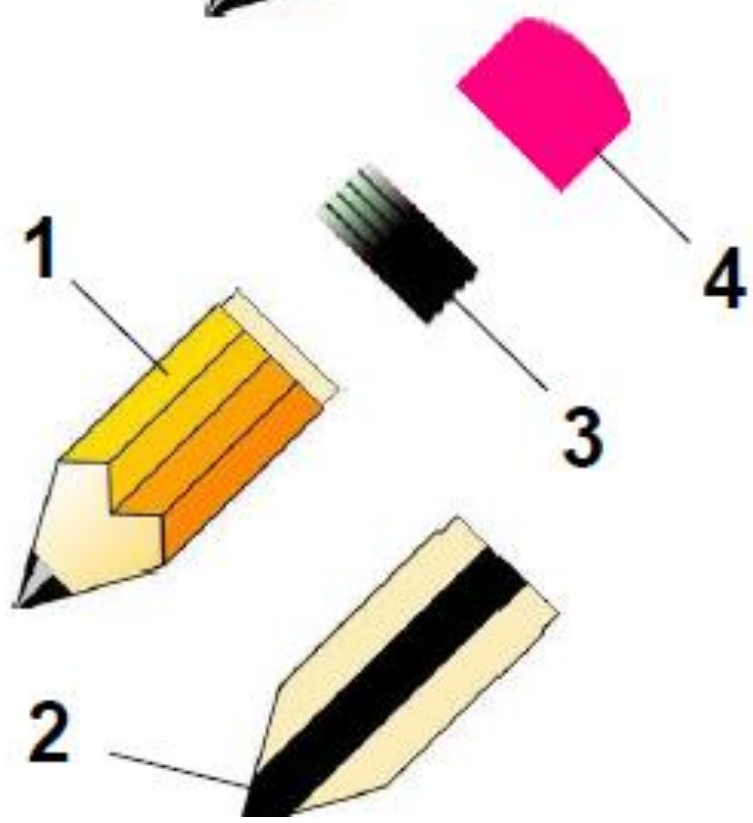

Parts/Elements

1. an elongated body
2. a writing medium/a lead
3. a connecting member/ a metal ring/a metal bushing/a ferrule
4. an eraser

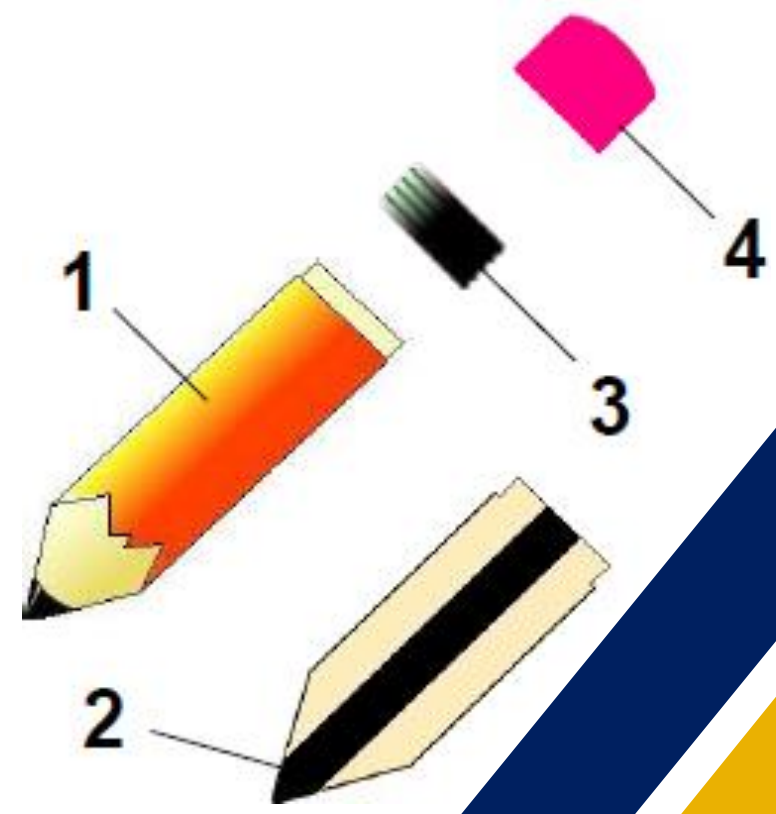

CLAIM DRAFTING EXERCISE

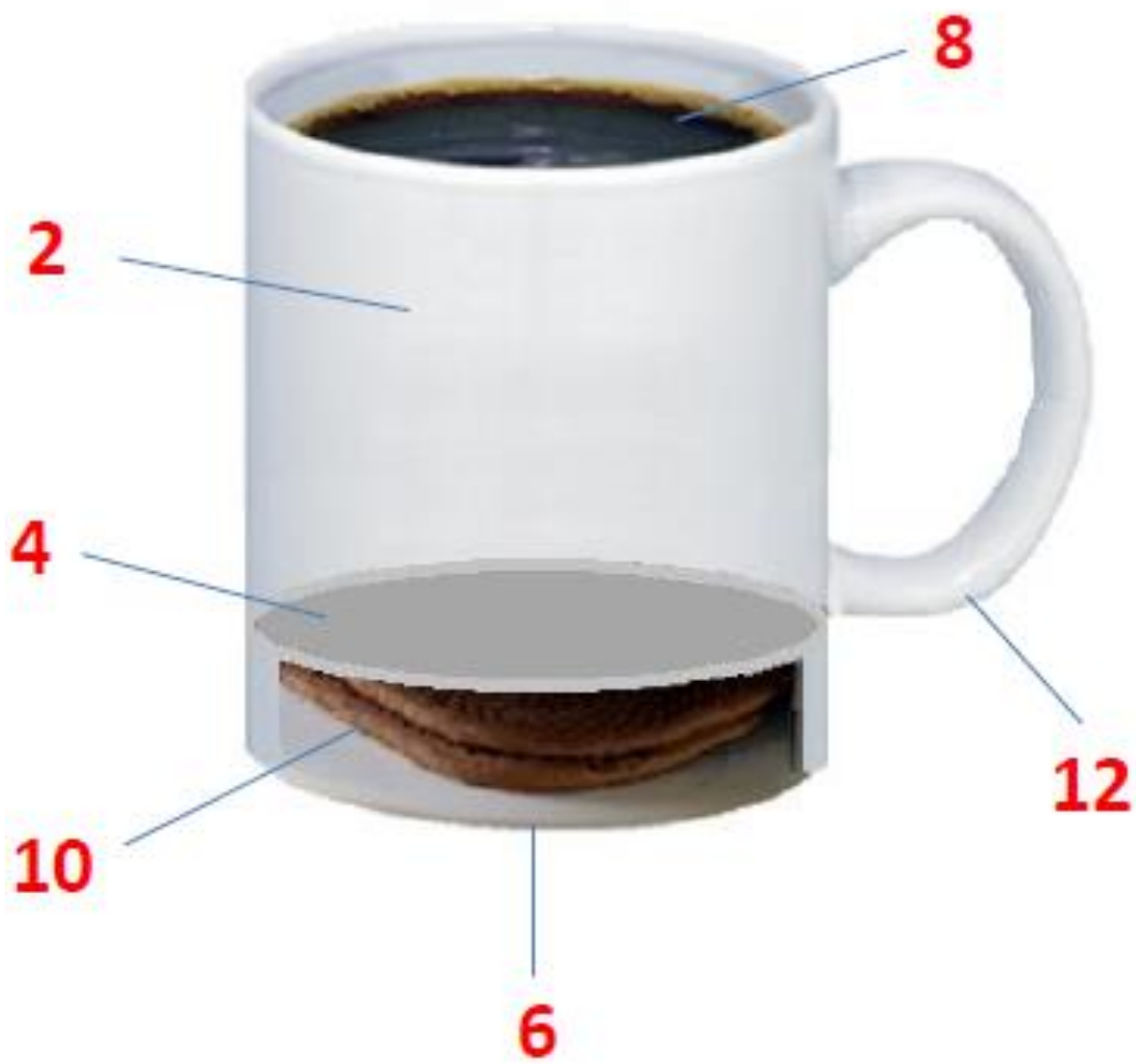

MUG

Parts/Elements

a body (2) ;
a dividing plate (4);
a base wall (6);
a liquid containing portion (8);
a biscuit containing portion (10);
a handle (12);

CLAIM DRAFTING EXERCISE (two-part claim)

Prior Art 1: A cart with three wheels

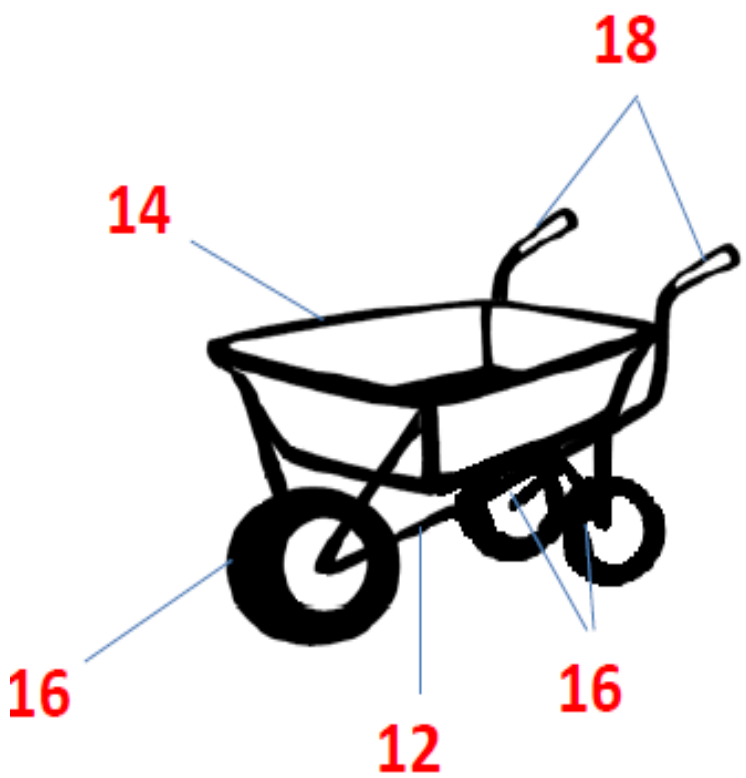

Prior Art 1

a frame (12) ;
a container member (14);
a plurality of wheels (16);
a pair of handles (18);

Prior Art 2

a container member (12)
a plurality of leg supports (14)

Prior Art 2: A storage cart

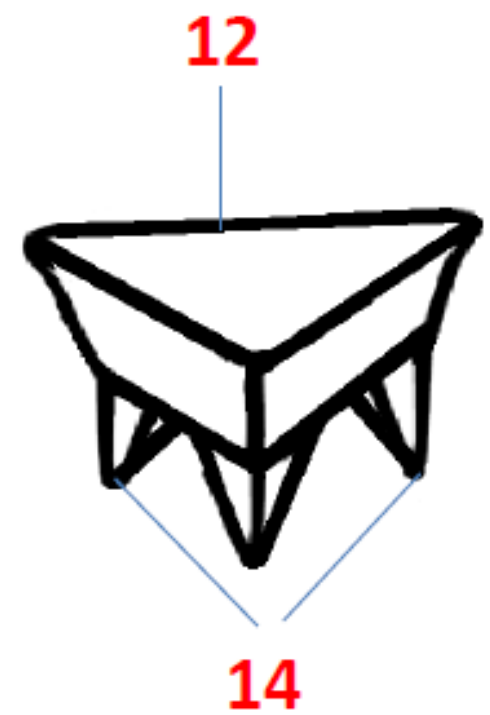

CLAIM DRAFTING EXERCISE (two-part claim)

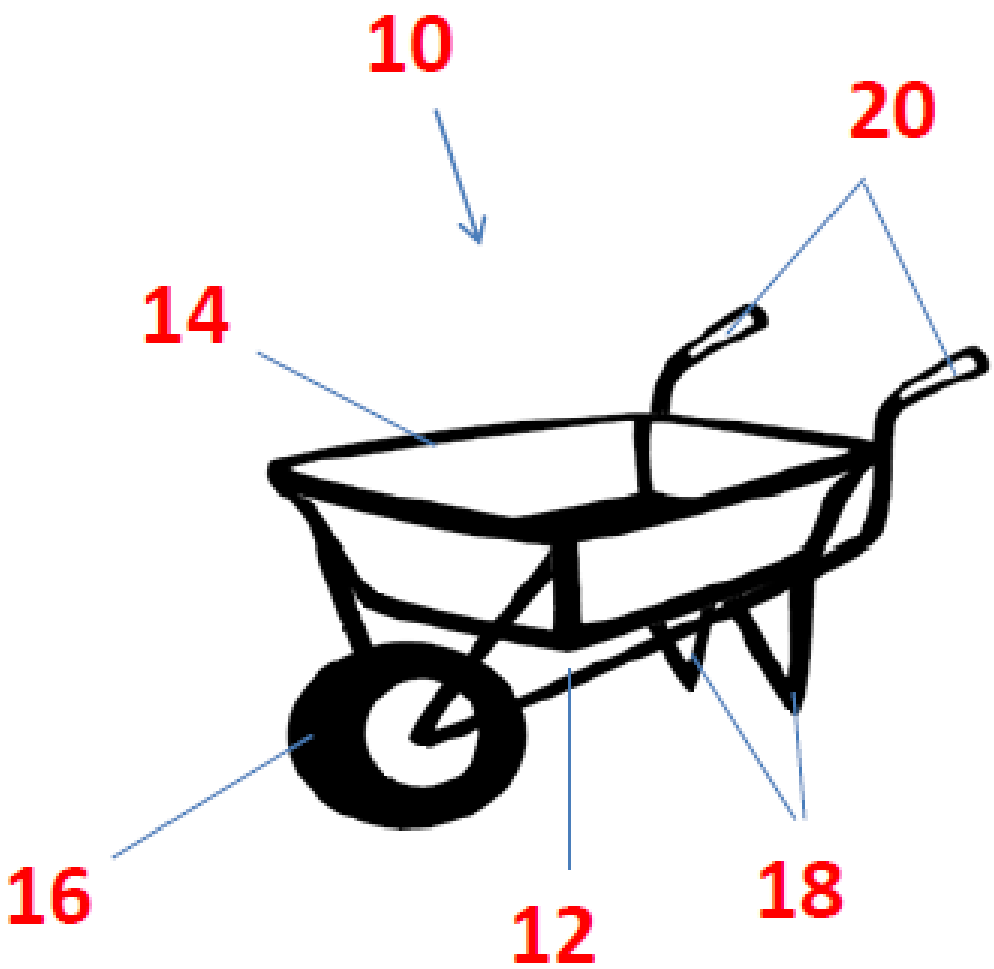

WHEELBARROW (10)

Parts/Elements

a frame (12);
a container member (14);
a wheel (16);
at least two leg members (18);
a pair of handles (20);