Implementation and Verification of MASH 1-1-1 for Fractional-N Frequency synthesizer in Zynq-7000 series SoC Platform

Mailerum Perumal S, Karthigeyan K A, Premanand V Chandramani
Department of Electronics and Communication Engineering
SSN College of Engineering, Chennai, Tamil Nadu, India-603110
E-Mail: karthigeyanka@ssn.edu.in

***Abstract*— The Delta-Sigma Modulator (DSM) is predominantly used to control the fractional division part of the PLL based Fractional-N Frequency Synthesizer. In this paper a third order Multi Stage Noise Shaping (MASH) Delta-Sigma Modulator architecture is designed using Verilog code. Simulated output is implemented in a SoC based Field programmable gate array (FPGA), Zynq 7000 series and output is verified using DSO.**

Keywords*— *Phase Noise; spur; fractional division ratio; MASH; ΔΣ Modulator; SoC; FPGA; Zynq 7000 Series.

I. INTRODUCTION

Recently, The Hardware implementation of wireless communication modules by using FPGA has been attracted in the research because of the following advantages. FPGA offers many advantages like re-programming, changes can be made and available during run time, ease of programmability etc. Zedboard is a platform used for implementation by using Xilinx Zynq-7000 FPGA. This Zynq has all programmable SoC which supports both hardware and software programmability. This type of board is mainly used for quick prototyping and confirmation of our ideas before getting it into the market. Zynq devices also equipped with ARM processor along with FPGA. So it can be also used for some industrial application such as IoT-based wireless monitoring applications, process control etc.

The Integer-N PLL Frequency Synthesizer has the advantage of low circuit complexity but suffers from small loop bandwidth principally in a narrow raster spacing applications. This pose difficulty in achieving low phase noise with High integer divide value. Reduction in phase noise can be accomplished in PLL based Fractional-N frequency synthesizer due to the relaxation on having larger loop bandwidth and higher PFD frequency. As Fractional-N PLL has larger loop bandwidth it has better controllability in VCO phase noise in addition to attaining faster loop settling time. Nevertheless, the periodicity in selecting dual/multi modulus divider translates to spurious tones in the Synthesizer output frequency. Several spur suppression techniques have been reported in the literature[2][3].

Among them ΔΣ modulator based fractional-N frequency synthesizer has been the focus amongst the research community. The fractional division value between the reference frequencies of the oscillator is decided by the output of ΔΣ modulator output. Though it suppress the spur tones the quantization noise is spread over large frequencies in single stage DSM and it is only conditionally stable. To alleviate the disadvantages posed by single stage DSM an efficient but little complex MASH architecture was proposed[10]. Noise cancellation logic is attained by placing single stage DSM in a cascaded manner and after appropriate filtering the output of each DSM is pooled together to produce the final output. In this paper 3rd order MASH DDSM technique is considered to implement in FPGA Platform.

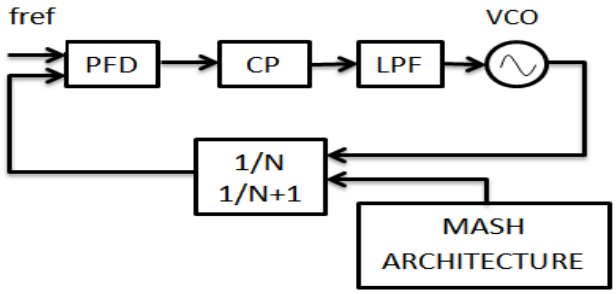

Fig.1. Fractional-N frequency synthesizer

This paper presents the complete design flow of MASH and implementation of fractional divider value necessary to design Fractional-N frequency synthesizer. The Fractional-N Frequency Synthesizer is shown in Fig. 1.The paper is organized as follows. Section II describes PLL based Fractional-N frequency synthesizer architecture. Section III describes design of MASH architecture. Implementation of MASH 1-1-1 delta sigma modulator in FPGA is discussed in Section IV. Finally, Conclusions are given in Section V.

978-1-5090-4724-6/17/$31.00©2017 IEEE

Authorized licensed use limited to: The Open University. Downloaded on April 24,2026 at 09:08:15 UTC from IEEE Xplore. Restrictions apply.

II. PLL BASED FRACTIONAL-N FREQUENCY SYNTHESIZER ARCHITECTURE

The channel selection in a ΔΣ fractional-N frequency synthesizer is provided by ΔΣ modulator. It is divided into two types: single-stage and cascaded.

A. Single Stage ΔΣ modulator

Fig. 2 shows a single stage modulator which incorporates an integrator, a quantizer, delay element and a summer in a negative feedback loop as shown in. The single stage sigma delta modulator has more spurious tones and quantization noise and affects the stability of the system.

$$Y(z) = X(z) + Q(z).(1 - z^{-1}) \quad (1)$$

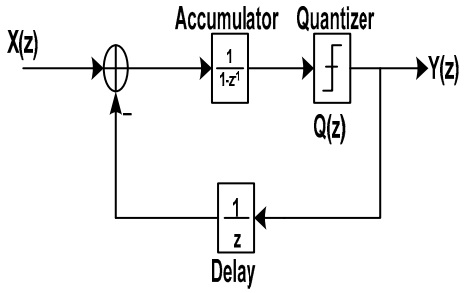

Fig.2 First order ΣΔ modulator

B. Cascaded or Multi-stage ΔΣ modulator

Higher order ΔΣ structure requires the consideration of many factors including noise shaping, spurious content of the output spectrum, output levels and loop filter order and circuit complexity. The high order ΔΣ modulators increase the complexity of circuits, thus chip size and power consumption increases. High order ΔΣ modulators can be realized with MASH architectures.

C. Mash 1-1-1 delta sigma architecture

The MASH architectures have simple configuration as it requires just adders and registers to be implemented [1]. The MASH modulation uses accumulators in a cascade configuration, and the quantized output of each stage is processed by noise cancellation logic, as shown in Fig. 3. The noise cancellation logic is of low complexity and it is simple and inherently stable. For most architecture, the signal transfer function should not affect the input. However MASH ΔΣ modulator produce a multi bit output which in turn must control a multi modulus divider. Second and third order modulators are practically used for fractional-N frequency synthesizers. Fourth or even higher order modulators are rarely used because it is difficult to suppress the phase noise at higher frequencies by a limited order of loop filter. This topology is suitable for pipelined operation with very high clock frequencies. The signal and quantization noise transfer function is,

$$Y(z) = X(z).z^{-3} + Q(z).(1 - z^{-1})^3 \quad (2)$$

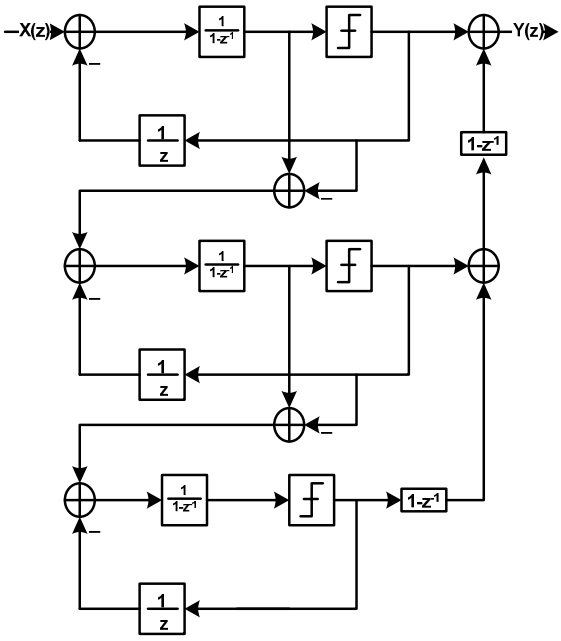

Fig.3. MASH 1-1-1 ΔΣ modulator

III. DESIGN OF MASH 1-1-1 ΔΣ ARCHITECTURE IN FPGA

A. MASH Implementation in zedboard

In a Fractional-N frequency synthesizer MASH architecture interface with zynq 7000 series shown in Fig. 4. Zynq System on Chip is developed by Xilinx which has both processor and FPGA on a single chip, providing scope for reconfiguration. The general architecture of the Zynq comprises two sections: the Processing System (PS), and the Programmable Logic (PL). These can be used independently or together, and in fact the power circuitry is conFig.d with separate domains for each, enabling either the PS or PL to be powered down if not in use. However, the most compelling use model for Zynq is when both of its parts are used in conjunction, as well as the interfaces between them

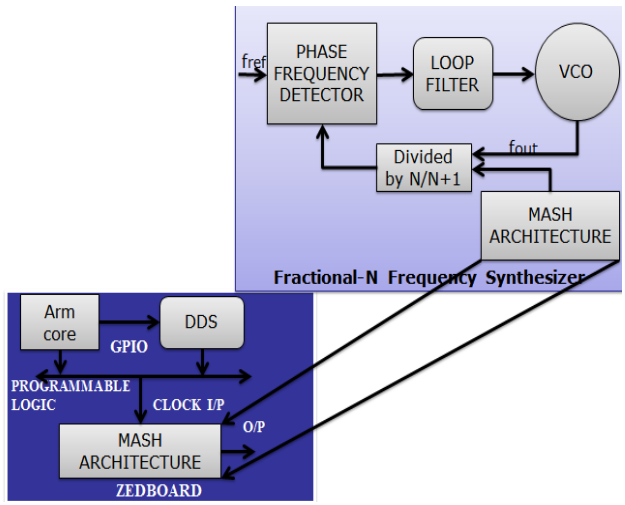

Fig. 4. MASH Interface With Zedboard

Authorized licensed use limited to: The Open University. Downloaded on April 24,2026 at 09:08:15 UTC from IEEE Xplore. Restrictions apply.

B. MASH 1-1-1 digital block design

MASH verilog module is driven by Zynq PS. Different clock frequencies have been given to check the functionality of MASH module in zedboard, where the post mapping process (.xdc) files are added to design MASH architecture. Zynq 7000 processor is added to a MASH block shown in Fig. 5. Clk signal is denoted as 'k'. Reset is denoted as 'rst'. Input is a 9-bit signal named x [8:0]. The output of the MASH block denoted as y [3:0].

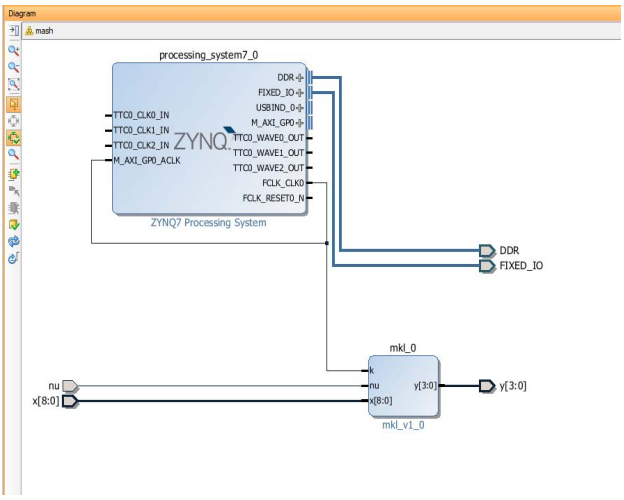

Fig. 5. MASH Block Design

C. Simulation result of mash architecture

The MASH output response is observed from signal Y[3:0] for different input vector values (2^n). k varies from 0 to length of input vector k.

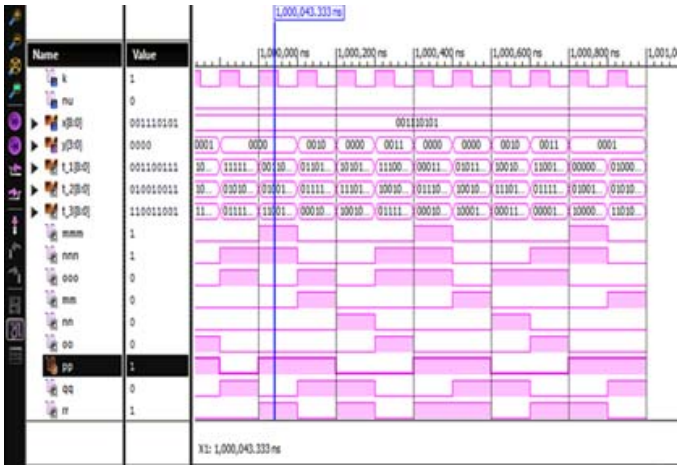

Fig. 6 simulation result for MASH architecture

D. Floorplanning and slicing of mash architecture

After simulation, Floor planning and slicing of Register Transfer Level (RTL) MASH modules using flip flops, latches, mux, demux and logic gates is implemented as shown in Fig. 7.

Fig. 7. Slicing of MASH 1-1-1 architecture

IV. Hardware Realization of MASH 1-1-1 Architecture

After simulation the bitstream was generated for MASH behavioral code and the generated bitstrem was loaded using Xilinx vivado-open hardware manager. MASH architecture output was taken from Zedboard Peripheral Module Interface (PMOD) and the time domain output signal was observed in Digital Storage Oscilloscope (DSO) .For a input clock frequency of 100MHz the MASH output signal Y[3:0] was observed from PMOD[3:0] respectively as shown in Fig. 8-11.

Pmod Y[0] = 50 MHz

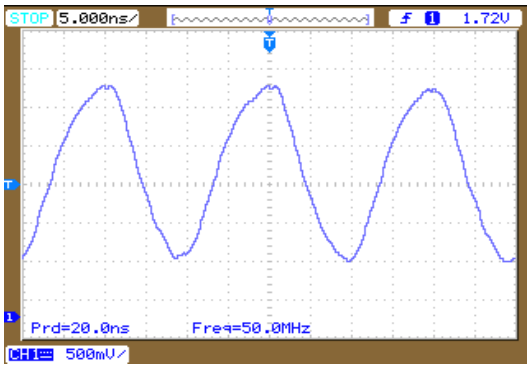

Fig. 8 Pmod Output Spectrum 50 MHz for Input Frequency of 100 MHz

Pmod [1] = 50 MHz

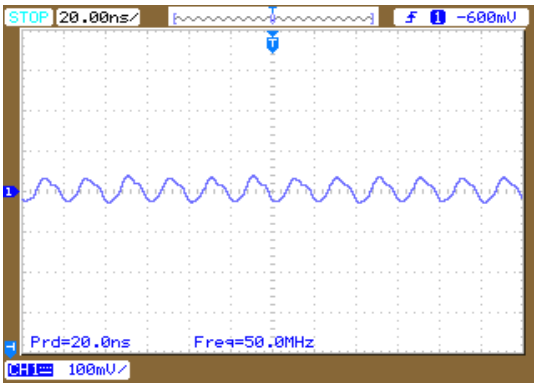

Fig. 9, Pmod Output Spectrum 50 MHz for Input Frequency of 100 MHz

Authorized licensed use limited to: The Open University. Downloaded on April 24,2026 at 09:08:15 UTC from IEEE Xplore. Restrictions apply.

Pmod [2] = 50 MHz

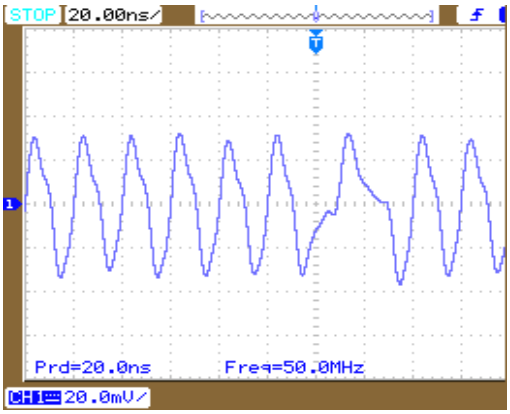

Fig. 10. Pmod Output Spectrum 50 MHz for Input Frequency of 100 MHz

Pmod [3] = 50 MHz

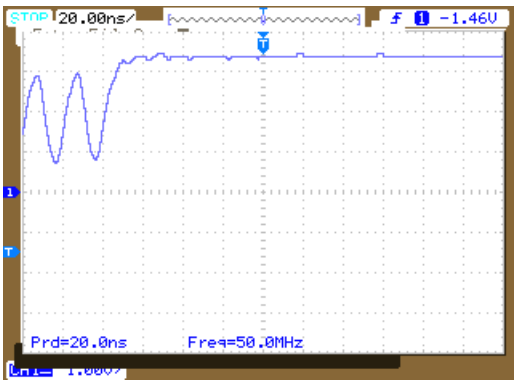

Fig. 11. Pmod Output Spectrum 50 MHz for Input Frequency of 100 MHz

Clocking wizard is used for generating various clock frequencies. For the various clock frequencies generated, the generated noise along with the output signals as shown in Fig.s 12.

Pmod Y[3] = 12.7 MHz

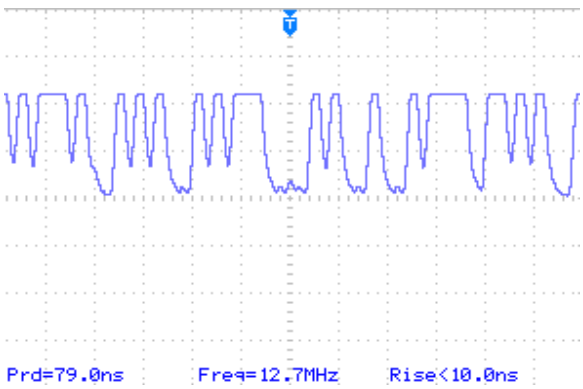

Fig. 12. Pmod Output Spectrum 12.7 MHz for Input Frequency of 10 MHz

A. *TIMING AND POWER ANALYSIS*

After post map implementation, the mash architecture's set up time, hold time, pulse width, power, and temperature have been be analyzed as shown in table 1.

TABLE 1
Timing and Power Analysis

PARAMETERS	VALUES
Set up	95.967 ns
Hold	0.205 ns
Pulse width	49.02 ns
Total on chip power	1.459 W
Junction temperature	41.8 ºC
Thermal margin	43.2 ºC

Post simulation and synthesis, hardware Utilization for input/output combinations, global buffers, flip flops, look up tables, and memory look up table for MASH architecture implementation using zedboard is reported in Fig. 13-14.

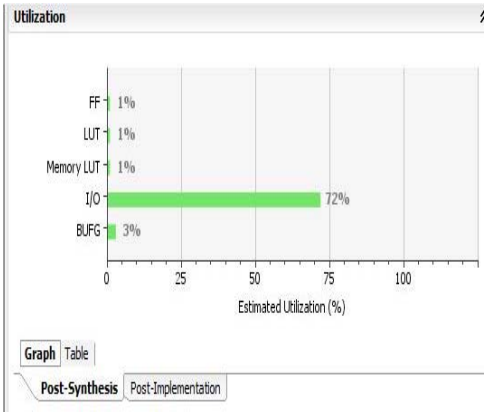

Fig. 13. Utilization of Hardware for MASH Architecture after Post-Synthesis

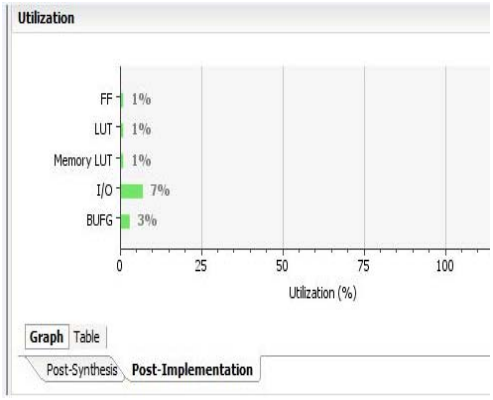

Fig. 14. Utilization of Hardware for MASH Architecture after Post-Implementation

Authorized licensed use limited to: The Open University. Downloaded on April 24,2026 at 09:08:15 UTC from IEEE Xplore. Restrictions apply.

V. CONCLUSION

Third order Multistage Noise Shaping (MASH) delta sigma modulator was designed and implemeted in zynq 7000 SoC processor. Post synthesis, simulation, FPGA implementation, floor planning and slicing of MASH architecture implemented using Xilinx's zedboard and Vivado suite. Clocking Wizard for different clock frequencies has been implemented in mash 1-1-1 ΔΣ modulator and output was observed. The mash block takes a set up time of 95.967 ns, hold time 0.205 ns, pulse width of 49.02 ns for an implementation in zedboard.

References

[1] Victor Rodolfo Gonzalez,miguel Angel, Guillermo Espinosa Flores And Franco Maloberti.,"Efficient Dithering In Mash Sigma-delta Modulators For Fractional Frequency Synthesizers", *IEEE Trans. Circuits Syst. II, Exp. Briefs,* Vol. 57, No. 9,pp.2394-2403, Sep.2010.

[2] Tom A.D. Riley et al.,"Delta Sigma Modulation in Fractional-N Frequency Synthesis'', *IEEE Journal of Solid-State Circuits,*Vol.28, No.5,pp.553-559, May 1993.

[3] M. Perrot, T. Tewksbury, and C. Sodini,"A 27-mW CMOS fractional-N frequency synthesizer using digital compensation for 2.5 -Mb/s GFSK modulation", *IEEE J. Solid-State Circuits*, vol. 32, no. 12, pp. 2048–2060, Dec. 1997.

[4] T. A. Riley, M. Copeland, and T. Kwasniewski,"Delta-sigma modulation in fractional-N frequency synthesis'', *IEEE J. Solid-State Circuits,* vol. 28, no. 5, pp. 553–559, May 1993.

[5] W. Rhee, B. Song, and A. Ali,"A 1.1-GHz CMOS fractional-N frequency synthesizer with a 3-b third-order modulator'', *IEEE J. Solid-State Circuits,* vol. 35, no. 10, pp. 1453–1460,Oct. 2000.

[6] H. Lee, J. Cho, K. Lee, I. Hwang, T. Ahn, K. Nah, and B. Park,"A fractional-N frequency synthesizer using a wide-band integrated VCO and a fast AFC technique for GSM/GPRS/WCDMA applications",*IEEE J. Solid-State Circuits,* vol. 39, no. 7, pp. 1164–1169, Jul. 2004.

[7] Ko-Chi Kuo, Chi-Wei Wu,"A 5 GHz LC-VCO frequency synthesizer for unlicensed band of WiMAX',*Expert Systems with Applications 41*, pp. 622–634, 2014.

[8] T. P. Kenny, T. A. D. Riley, N. M. Filiol,M. A. Copeland, "Design and realization of a digital modulator for fractional-N frequency synthesis'', *IEEE Trans. Veh. Technol.,* vol. 48, no. 2, pp. 510 521, Mar. 1999.

[9] Chun-Yi Kuo , Jung-Yu Chang,Shen-Iuan Liu,"A Spur-Reduction Technique for a 5-GHz Frequency Synthesizer'',*IEEE transactions on circuits and systems—I: regular papers,* vol. 53, no. 3, March 2006.

[10] Gowthami A.,Premanand V. Chandramani," Phase Noise analysis of Fractional-N frequency synthesizer with Higher order MASH Delta sigma modulator'',*National Conference on Information and Communication Technology* June 2015.

[11] Singh Patel. G., and Sharma. S.,"Comparative Study of PLL, DDS and DDS-based PLL Synthesis Techniques for Communication System'', *International Journal of Electronics Engineering,* Vol. 2, No.1, pp. 35-40,2010.

[12] Kameche. S., Feham. M., and Kameche. M.,"PLL Synthesizer Tunes DCS 1800 Band'', *Microwave & RF,* Vol.46, No. 6, pp. 84-90, June 2007.

Authorized licensed use limited to: The Open University. Downloaded on April 24,2026 at 09:08:15 UTC from IEEE Xplore. Restrictions apply.