Third International Conference on Information Science and Technology
March 23-25, 2013; Yangzhou, Jiangsu, China

The Design of a High Speed and High Precision Sigma-Delta Modulator

Shuangwei Han and Yuliang Wang

***Abstract*—A 4-order single-loop single-bit digital sigma-delta modulator with 16-bit-precision and its interpolation filters are designed in this paper. Furthermore, behavioral simulations of the design are verified in Simulink. A top-down system design methodology that can be used to determine the degree of influence of the modulator structure parameters on the performance of the modulator is provided. This approach not only provides important guiding significance on implement of the modulator in an FPGA processor, but also reduces the design complexity and shortens the integrated circuit(IC) design cycle of the modulation system. Finally, circuit design of the digital sigma-delta modulator with an input signal bandwidth of 20kHz and over-sampling rate of 64 , that is the sampling rate of 2.56MHz, was initially realized in an FPGA processor, based on behavioral simulations, which provides some guiding significance for future high-speed design and application of the digital sigma-delta modulator.**

I. Introduction

SIGMA-DALTA(Σ △)modulator(SDM) uses oversampling and noise-shaping-technology to suppress the quantization noise within the baseband, which allows signal-to-noise-ratio(SNR) in the baseband significantly increased. Design requirements of the anti-aliasing filter is also greatly reduced because of using oversampling technique in the analog-to-digital converter(ADC), which lowers the design requirements of the analog circuits and increases the design requirements of the digital circuits which can take advantage of the digital integrated-circuit(IC) technology that is developing rapidly now. The sigma-delta modulation technique is compatible with CMOS IC design process especially and is the first choice technology to achieve high-precision ADC and digital-to-analog converter (DAC). Therefore, it has been widely used in MEMS sensors[1]-[4]; audio[5],[6]; ultrasound[7],[8] and many other fields. However, it has been only used in the low-frequency and IF fields so far that is mainly because in the high-frequency applications, the clock is difficult to design to meet the demand of the high frequency clock of the SDM and other reasons are standard CMOS process and power consumption limitations. Field programmable gate array (FPGA) is a kind of parallel and pipelined processors developed and matured recently. FPGA is produced generally using technology of SRAM or Flash production process, so the sigma-delta modulator designed in FPGA expected to be utilized in high-frequency fields. And FPGA is proposed as a semi-custom circuit in the field of application specific integrated circuit (ASIC). Its programmability leads to the design and verification of a SDM is more convenient, which can not only reduce design costs and shorten the design cycle, but also contribute to the conversion from design in FPGA to ASIC. But there are a relatively small number of the reported papers on the SDM based on FPGA. Only the RCC Cheung and his partners designed a 3-5 order configurable SDM in paper[5]. SS Abeysekera and his partners presented a 7 order band-pass SDM in paper[9]. C. Dick and F. Harris described a 4 order SDM in paper[10]. Except that there are no other reports. From above considerations, a 4-order digital SDM is designed by a top-down system design method. At first behavioral simulations of the SDM is verified in Simulink. Then circuit design of the SDM is initially realized in an FPGA processor, based on behavioral simulation, which provides some guiding significance for future high-speed design and application of the digital SDM.

II. Digital SDM Structure & Working Principle

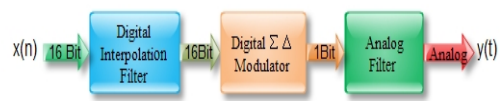

Fig. 1. Block diagram of an oversampling and noise-shaping DAC.

Digital SDM is not only widely used in oversampling and noise-shaping DAC but also the most critical component of the DAC. It has a direct impact on the performance and stability of the DAC. Oversampling and noise-shaping DAC is composed of three parts: digital interpolation filter, digital SDM and analog filter and its system structure is shown in Fig. 1.

A. Digital SDM Structure

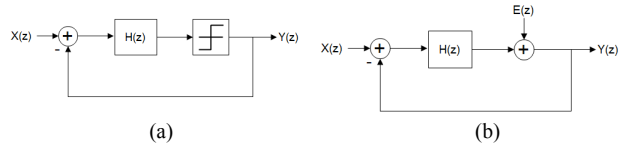

Fig. 2. Overall block diagram of an SDM.

An overall block diagram of the digital SDM is shown in Fig.2(a). To simplify the analysis process, a linear representation shown in Fig.2 (b) of the overall block diagram is obtained through approximating the unit quantizer by a unity gain amplifier and an additive noise source, where x(n) is the input signal e(n) is the quantization error. Suppose x(n)

Manuscript received October 9, 2012. This work was supported by the Unit 17, Navy 91267 and the Institute of Acoustics, Chinese Academy of Sciences.

S Han is with the Unit 17, Navy 91267, Fuzhou, 350600, PRC(e-mail: hsw1984_2008@163.com).

Y Wang, corresponding author, is with the Institute of Acoustics, Chinese Academy of Sciences, Beijing 100190, PRC(phone: 010-82547722; e-mail: wang_career@163.com).

Authorized licensed use limited to: The Open University. Downloaded on April 24,2026 at 09:06:51 UTC from IEEE Xplore. Restrictions apply.

and e(n) are not relevant, the transfer function S(z) and N(z) are easy to get by the Mason formula.

$$S(z)=\frac{Y(z)}{X(z)}=\frac{H(z)}{1+H(z)} \tag{1}$$

$$N(z)=\frac{Y(z)}{E(z)}=\frac{1}{1+H(z)} \tag{2}$$

$$Y(z)=S(z)\cdot X(z)+N(z)\cdot E(z) \tag{3}$$

The above formulas show that the design of a SDM is to design transfer function H(z) tending to be infinity as far as possible when the input signal within the baseband, so that its SNR in the baseband is maximized. The paper [11] mentioned single loop, cascade, and error feedback three structures of the SDM in the form. But single-loop feed-forward structure together with single-loop distributed feedback structure is the most widely used ones. And there have been programs dedicated to the design of structural parameters of the SDM reported in paper[12, 13]. The reason why these two structures (shown in Fig.3) have been widely used mainly because performance of the SDM is not sensitive to the structural parameters of them, that is, subtle changes in the structural parameters of the SDM have little effect on its performance.

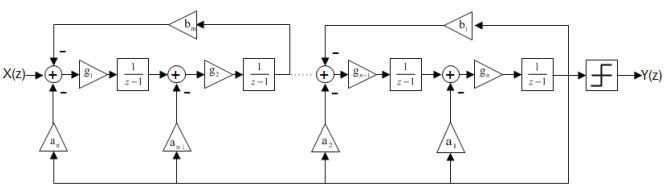

(a) Distributed feedback structure

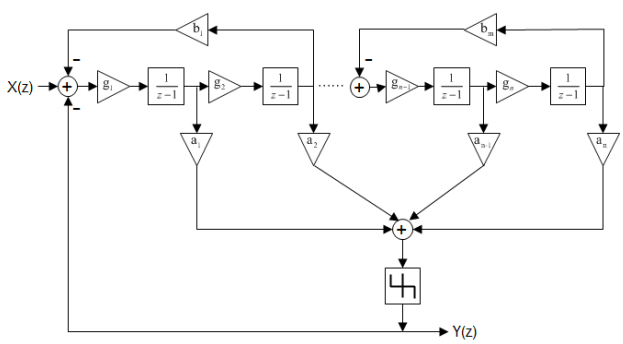

(b) Feed-forward structure

Fig. 3. Block diagram of an oversampling and noise-shaping DAC.

B. Digital SDM Working Principle

1)Oversampling technology: Quantization noise e(n) based on the quantization noise model mentioned in literature[14] is uniformly distributed in $(-\Delta/2,\Delta/2]$ and its power P is $\Delta^2/12$, where Δ is quantization spacing. Suppose quantization noise is a kind of white noise, so its power is not relevant with sampling frequency and a constant to a constant quantization spacing. Therefore if sampling rate is increased, the quantization noise would be extended to a wider band, and baseband is fixed, which is equivalent to lowering the noise power and increasing the SNR within the baseband. Based on the above analysis, it shows that power density function of the quantization noise k_e is:

$$k_e=\frac{P}{f_s}=\frac{\Delta^2}{12}\cdot\frac{1}{f_s} \tag{4}$$

Its power-within-the-baseband P_e is:

$$P_e=\int_{-f_b}^{f_b}k_e\,df=\frac{\Delta^2}{12}\cdot\frac{1}{OSR} \tag{5}$$

where $OSR=f_s/2f_b$ is the oversampling rate. Thus, when the input signal has a maximum power, the signal-quantization-noise-ratio SQNR is:

$$SQNR=10\lg\frac{P_s}{P_e}=6.02N+10\lg OSR \tag{6}$$

where N is the quantization bits. From the above results it can be seen that the SNR in the baseband is changed at the speed of $3dB/octave$.

2)Noise shaping technology: Noise shaping technology is similar to the modulation technique, and its basic idea is to move the quantization noise out of the baseband and thereby improve the SNR in the baseband through designing the noise transfer function. Assume that the filter shown in Fig.1 is an ideal filter, the baseband quantization noise power P_e is:

$$P_e=\int_{-f_b}^{f_b}k_e\left|N(f)\right|^2df\approx\frac{\Delta^2}{12}\cdot\frac{\pi^{2L}}{2L+1}\left(\frac{1}{OSR}\right)^{2L+1} \tag{7}$$

where L is the order of the SDM. The SQNR when the input signal has a maximum power is:

$$\begin{aligned}SQNR&=10\lg\frac{P_s}{P_e}\\&=6.02N-10\lg\frac{\pi^{2L}}{2L+1}+10(2L+1)\lg(OSR)\end{aligned} \tag{8}$$

Therefore, when OSR is constant, the higher the modulator's order is, the better the noise shaping and the higher the baseband SNR.

III. Digital SDM Design

A. Parameter Design

1)Determine the number of bits of the output signal: 1- bit modulator has excellent linearity, while the multi-bit one has to use digital correction or dynamic matching technology to increase its linearity and to suppress its harmonic distortion, which will increase the complexity of system. So 1- bit modulator is chosen in this paper.

2) Consider the OSR: Considering the high-speed clock not easy to achieve and the high-speed application requirements, OSR is selected as 64 in this paper.

3)Determine the orders: The output of the first and second order modulator exist serious pseudo sound or jitter noise problems, and compared with the higher order modulation they have to use higher sampling rate to achieve the same SNR. In additions, high-speed clock is difficult to achieve, which is bound to affect the applications of the modulator in the high-speed systems. So this article selected the single-loop feed-forward high-order modulator structure.

Authorized licensed use limited to: The Open University. Downloaded on April 24,2026 at 09:06:51 UTC from IEEE Xplore. Restrictions apply.

4)Calculate the parameters: Because the baseband quantization noise characteristics of the modulator is mainly determined by the zero distribution of the noise transfer function, so the modulator's SNR can be further enhanced by optimizing of the parameters b in Fig.3 and distributing of zeros of the modulator in the range of the interest frequency.

According to the requirements, a 16-Bit DAC will be designed, that is, the accuracy of the digital SDM has to be at least 97dB. Since there are other noise sources in the system, the deduced formula 8 is the maximum SNR expression as well as non-ideality factor of the filter inevitably exists, the SDM's order is obtained L=4 when the N and OSR in the formula 8 are replaced by 1 and 64. So this system has 40dB of design margin, which is sufficient to meet the design requirements.

B. Stability Analysis

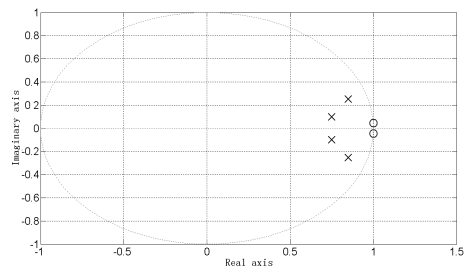

(a) Pole-zero plot of N(z)

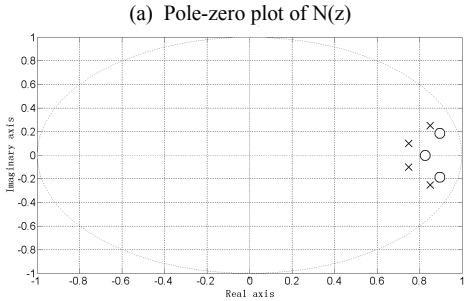

(b) Pole-zero plot of S(z)

Fig. 4. Pole-zero plots of a 4-order SDM.

As the above design processes are based on the approximate model, so it is necessary to do stability analysis for the designed SDM. As literature[11] reported, although the high-order SDM has been successfully designed and market-oriented, its stability analysis is still lack of rigorous theoretical foundation. In this paper, the root locus of the linear control theory is introduced to analyze its stability. Pole-zero plots of the error transfer function N(z) and signal transfer function of S(z) of the designed SDM are shown in Fig. 4, where pole-zero plot of N(z) is shown in Fig. (a) and pole-zero plot of S(z) is shown in Fig. (b). The figures show that the poles of the N(z) and S(z) are same and symmetrical distribution in the unit circle, so the designed system is under damped stable system. While the root locus diagram of the SMD's open-loop transfer function H(z) is shown in Fig. 5. It shows that the system is not always stable, when the gain of the unit quantize is reduced to a certain value, there will be two roots out of the unit circle, then the system will become unstable.

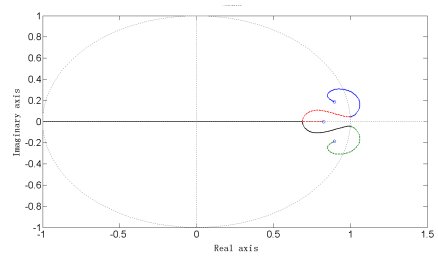

Fig. 5. Root locus diagram of a 4-order SMD's open-loop transfer function H(z).

C. Filter Design

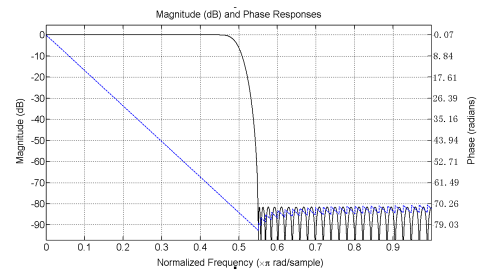

(a) Frequency response of the half-band filter

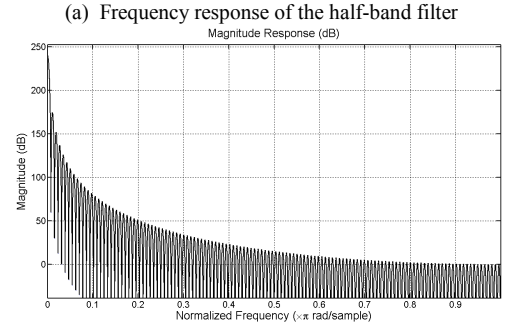

(b) Frequency response of the CIC filter.

Fig. 6. Frequency responses of the designed digital filters.

Filtering is necessary on both ends of the digital SDM, input and output, this is because the input end requires a digital interpolation filter to prevent frequency aliasing problems caused by increasing the sampling rate due to oversampling technique and the output end requires a analog filter to eliminate the quantization error that has been noise-shaped by the modulator to improve the baseband SNR. In this paper, the analog filter is a 4-order, cutoff frequency 20 kHz, Butterworth low-pass filter. According to the literature[11], the digital interpolation filter is using two cascaded structure, the pre- stage filter interpolated by 2 using half-band filter and the last stage filter interpolated by 32 using CIC filter, in this paper. The CIC filter is a kind of digital sliding mean filter, its transfer function is expressed as equation 9:

$$H(z)=\left(\frac{1}{RD}\frac{1-z^{-RD}}{1-z^{-1}}\right)^{S} \tag{9}$$

where D is the delay number of the comb-like part, R is the interpolation factor and S is the cascade number. The side lobe suppression of the single-stage CIC filter is only 13.46dB, filtering effect is not good, and so a 5-order CIC structure is used in this paper. And make RD equal to $f_s/2f_0$ as far as possible, where f_s is the sampling frequency and f_0 is the center frequency of the input signal. Frequency

Authorized licensed use limited to: The Open University. Downloaded on April 24,2026 at 09:06:51 UTC from IEEE Xplore. Restrictions apply.

responses of the designed half-band filter and CIC filter are shown in Fig. 6 where the frequency response of the half-band filter is shown in Fig.(a) and the frequency response of the CIC filter is shown in Fig.(b).

IV. Digital SDM Simulation & Implementation

After the above system-level design, the structural parameters of the modulator are obtained. To validate whether the SDM can be implemented in FPGA and reach the projected performance and design objectives or not, in this paper, behavioral simulations of designed modulator have been done in Simulink. Its simulation block diagram is shown in Fig.7. The above mentioned behavioral simulations can also be used to study the impact of various factors on the modulator performance, which not only helps to identify the bottlenecks of the design, but also contributes to using different implementations and optimization programs for the different degree of influence. And thus problems that some of the system modules are failed designed while others are designed over excellent are avoided, which are leading to increasing system design complexity and cost and extending the design cycle. That ensures products to market faster.

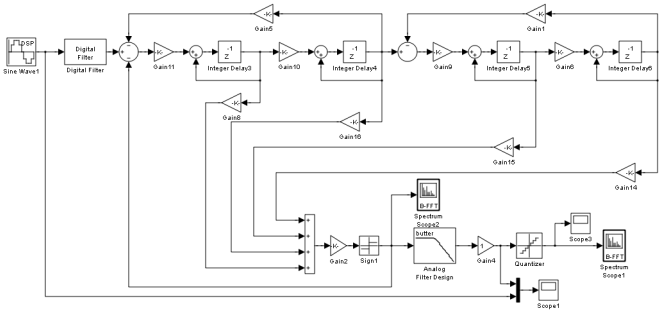

Fig. 7. Simulation block diagram of a 4-order SDM.

Fig. 8 depicts the modulator's output signal waveform and its input signal waveform that is 5 kHz sinusoidal signal whose amplitude is 0.3V and sampling frequency is 40 kHz, where the input sinusoidal signal waveform is depicted in the blue dotted line and the output signal waveform is depicted in the black solid line. The output signal waveform shows that a very good recovery of the input signal can be obtained by the modulator.

Fig.9 and Fig.10 describe the frequency characteristics of the SDM's output signals, when the simulation conditions are the same as in Fig.8. Time domain waveform of the frequencies of the SDM's output signals is shown in Fig.9. It shows that the frequency of the output signals fluctuated between 4999.95Hz and 5000.06Hz, where the maximum fluctuation frequency was 0.11Hz. While Fig.10 describes Blackman-window periodogram of the SDM's output signals, where Fig.(a) shows spectrogram before analog-filtering of the output signals and Fig. (b) shows spectrogram after that. From Fig. 9 and Fig.10, it can be known that the SDM has an excellent noise shaping function. Its SNR is 112dB in baseband ranging 0-20kHz, but particularly poor out of the baseband.

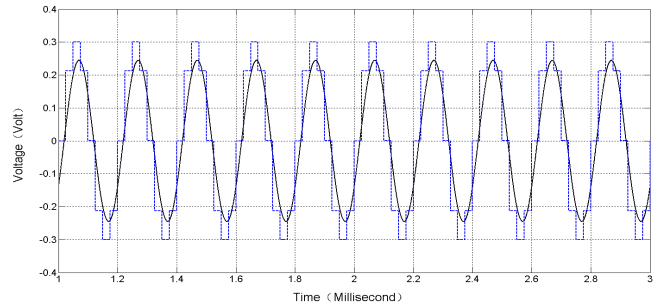

Fig. 8. Output signal and input signal waveforms of a 4-order SDM.

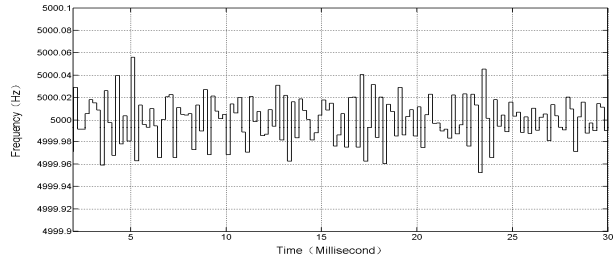

Fig. 9. Time domain waveform of the frequencies of a 4-order SDM's output signals.

System design of the SDM's was initially realized in an FPGA processor, based on above analysis, design and behavioral simulations, according to parallel and pipeline processing characteristics of the FPGA. In order to reduce the number of multipliers used in the system, the digital half-wave band interpolation filter was realized using a distributed algorithm[15]. And other multiplications, such as scale factors of the SDM, were implemented by the constant value multipliers in the FPGA in order to improve system speed. Stability of the SDM's quantizer is such a harsh requirement that the digital output port of the FPGA can not meet. Therefore regulator circuit is needed to design. However, at the present stage of the exploratory study, this part of the circuit has not been designed. So in this paper, the outputs of the FPGA in binary form were processed in Simulink, the results of the processing were similar to the outputs shown in Fig. 8 and Fig.10. Merely the approximation of the SDM's coefficients leaded to the baseband SNR decreasing to 106dB

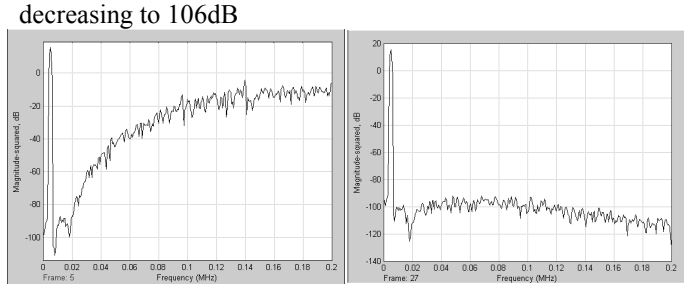

(a) Spectrogram before analog-filtering of the output signals (b) Spectrogram after analog-filtering of the output signals

Fig.10. Blackman-window periodogram of the SDM's output signals when its input signal is 5 kHz sinusoidal signal.

V. Conclusions

A 4-order single-loop single-bit digital SDM with 16-bit-precision and its interpolation filters were designed in this paper. And behavioral simulations of the design were also done in Simulink, which would be used to not only verify the design, but also determine the effects of the SDM's structure parameters on its performance, which is contributed

Authorized licensed use limited to: The Open University. Downloaded on April 24,2026 at 09:06:51 UTC from IEEE Xplore. Restrictions apply.

to the SDM's implementation in the FPGA and IC. Finally, circuit design of the digital SDM with an input signal bandwidth of 20kHz and OSR of 64 , that is the sampling rate of 2.56MHz, was initially realized in an FPGA processor, based on behavioral simulations, which provides some guiding significance for future high-speed design and application of the digital SDM.

REFERENCES

[1] J. Raman, E. Cretu, P. Rombouts, and L. Weyten, "A closed-loop digitally controlled MEMS gyroscope with unconstrained sigma-delta force-feedback," *Sensors Journal, IEEE* , March 2009, vol.9, no.3, pp.297-305.

[2] J. Raman, E. Cretu, P. Rombouts, and L. Weyten, "A digitally controlled MEMS gyroscope with unconstrained sigma-delta force-feedback architecture,"*Micro Electro Mechanical Systems(MEMSYS), 19th IEEE International Conference on Micro Electro Mechanical Systems* , May 2006, pp.710-713.

[3] R. Wilcock, and M. Kraft, "Genetic algorithm for the design of electro-mechanical sigma delta modulator MEMS," *Sensors*, 2011, vol.11, no.10, pp.9217-9232.

[4] T. Northemann, M. Maurer, S. Rombach, A. Buhmann, and Y. Manoli, "A digital interface for gyroscopes controlling the primary and secondary mode using bandpass sigma–delta modulation," *Sensors and Actuators A: Physical*, August 2010, vol.162, no.2, pp. 388-393.

[5] R.C.C. Cheung, K.P. Pun, S.C.L. Yuen, K.H. Tsoi, and P.H.W. Leong, "An FPGA-based re-configurable 24-bit 96kHz sigma-delta audio DAC," *Field-Programmable Technology (FPT), 2003 IEEE International Conference on Field-Programmable Technology*, Dec. 2003, pp.110-117.

[6] L.Y. Liu, R. Chen, and D.M. Li, "A 20-Bit sigma-delta D/A for audio applications in 0.13um CMOS," *Circuits and Systems(ISCAS) 2007, IEEE International Symposium on Circuits and Systems* , May 2007, pp.3622-3625.

[7] M. Inerfield, G.R. Lockwood, and S.L. Garverick, "A sigma-delta-based sparse synthetic aperture beamformer for real-time 3-D ultrasound," *Ultrasonics, Ferroelectrics and Frequency Control, IEEE Transactions on* , Feb. 2002, vol.49, no.2, pp.243-254.

[8] C.Q. Gao, J.Y. Thou, L.M.Koh, and E.M.C. Wong, "Oversampled delta-sigma beamformer with modified zone-based dynamic focusing," *Biomedical Imaging: Nano to Macro, 2006. 3rd IEEE International Symposium on Biomedical Imaging: Nano to Macro*, April 2006, pp.892-895.

[9] S.S. Abeysekera, and C. Charoensak, "FPGA implementation of a sigma-delta (Σ-Δ) architecture based digital I-F stage for software radio,"*ASIC/SOC Conference, 2002 15th Annual IEEE International*, Sept. 2002, pp. 341- 345.

[10] C. Dick, and F. Harris, "FPGA signal processing using sigma-delta modulation," *Signal Processing Magazine, IEEE* , Jan 2000, vol.17, no.1, pp.20-35.

[11] S.R. NORSWORTHY, R. SCHREIER, and G.C. TEMES, "Delta-sigma data converters -theory, design and simulation," New York: IEEE Press Marketing, 1996.

[12] T.H. Kuo, K.D. Chen, and J.R. Chen, "Automatic coefficients design for high-order sigma-delta modulators," *Circuits and Systems II: Analog and Digital Signal Processing, IEEE Transactions on* , Jan 1999, vol.46, no.1, pp.6-15.

[13] H.M. Wang, and T.H. Kuo, "An automatic coefficient design methodology for high-order bandpass sigma-delta modulator with single-stage structure," *Circuits and Systems II: Express Briefs, IEEE Transactions on*, July 2006, vol.53, no.7, pp. 580-584.

[14] A.V. Oppenheim, and R.W. Schafer, "Digital signal processing ," USA:IEEE Trans, 1980

[15] U.M. Baese, "Digital Signal Processing with Field Programmable Gate Arrays(3rd Ed) ," USA: Springer, 2011.

Authorized licensed use limited to: The Open University. Downloaded on April 24,2026 at 09:06:51 UTC from IEEE Xplore. Restrictions apply.