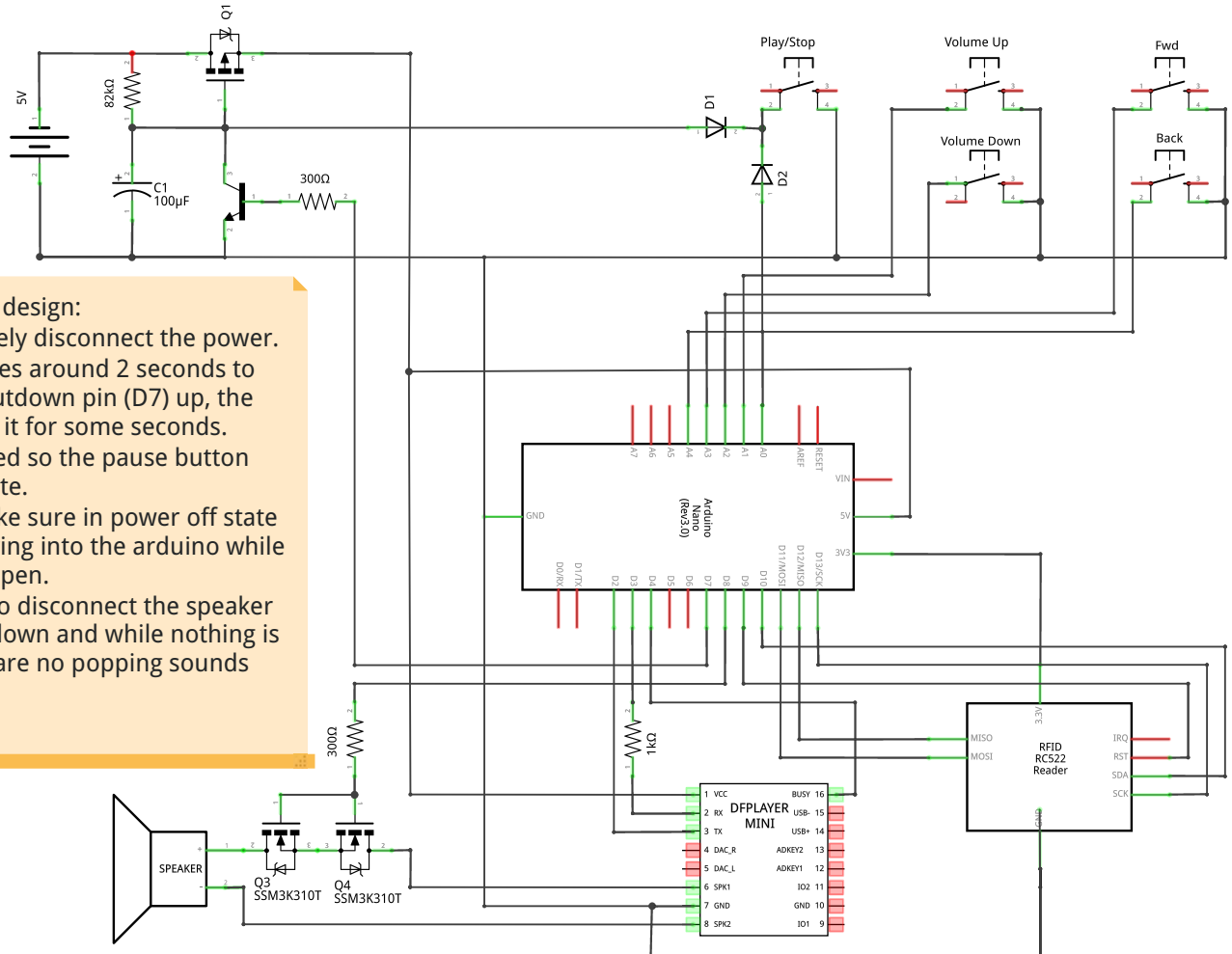


Changes to the original design:
- Q1 is used to completely disconnect the power.
- Since the software takes around 2 seconds to startup and pull the shutdown pin (D7) up, the capacitor C1 paypasses it for some seconds.
- The diode D1 is needed so the pause button still can normally operate.
- The diode D2 is to make sure in power off state there is no current flowing into the arduino while the Q1 is still partially open.
- Q3 and Q4 are used to disconnect the speaker at startup, before shutdown and while nothing is played. This way there are no popping sounds and no noise in inde.

fritzing