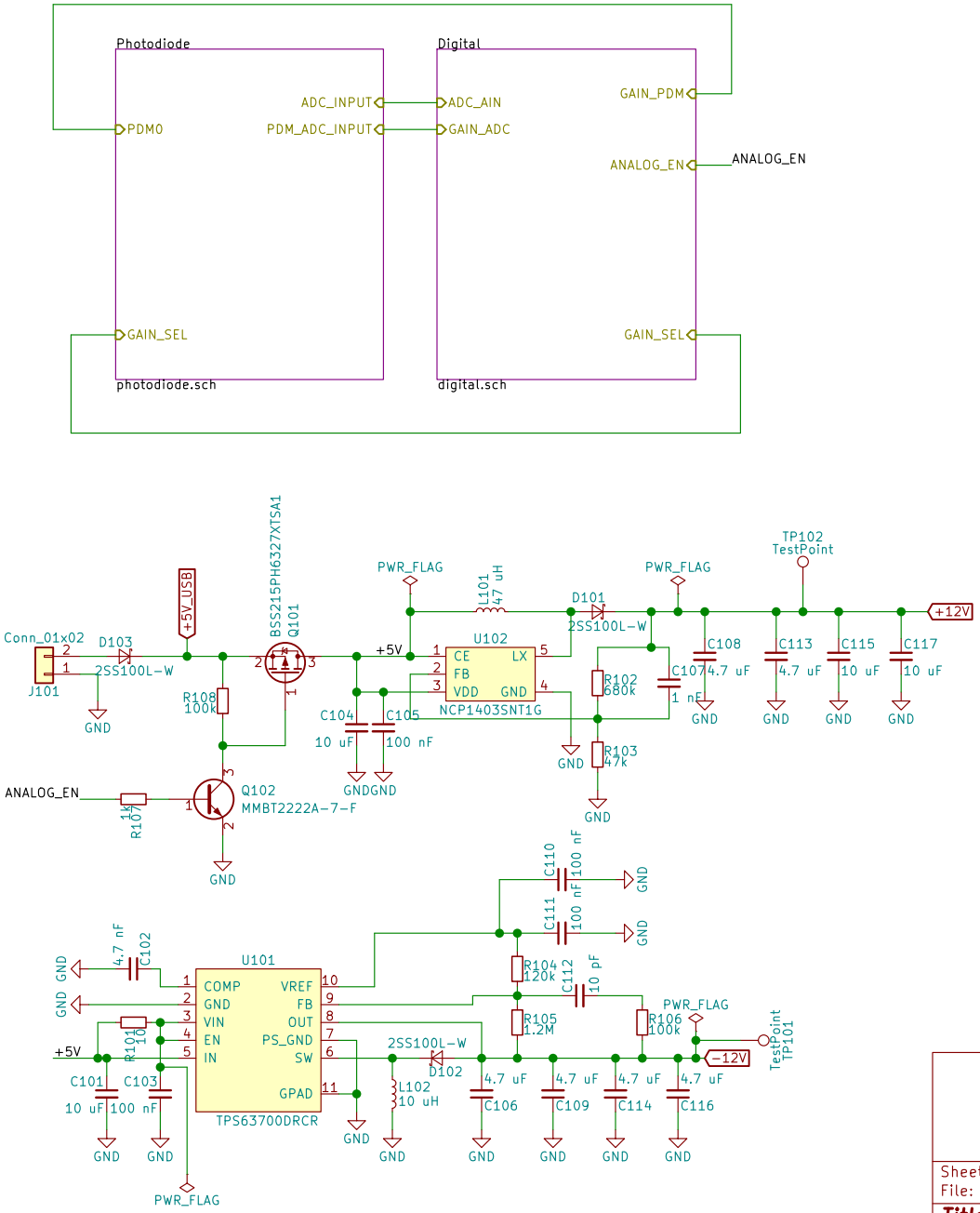

Sheet: /
File: receiver.sch

Title:

Size: USLetter	Date:	Rev:
KiCad E.D.A. kicad 5.0.1		Id: 1/3

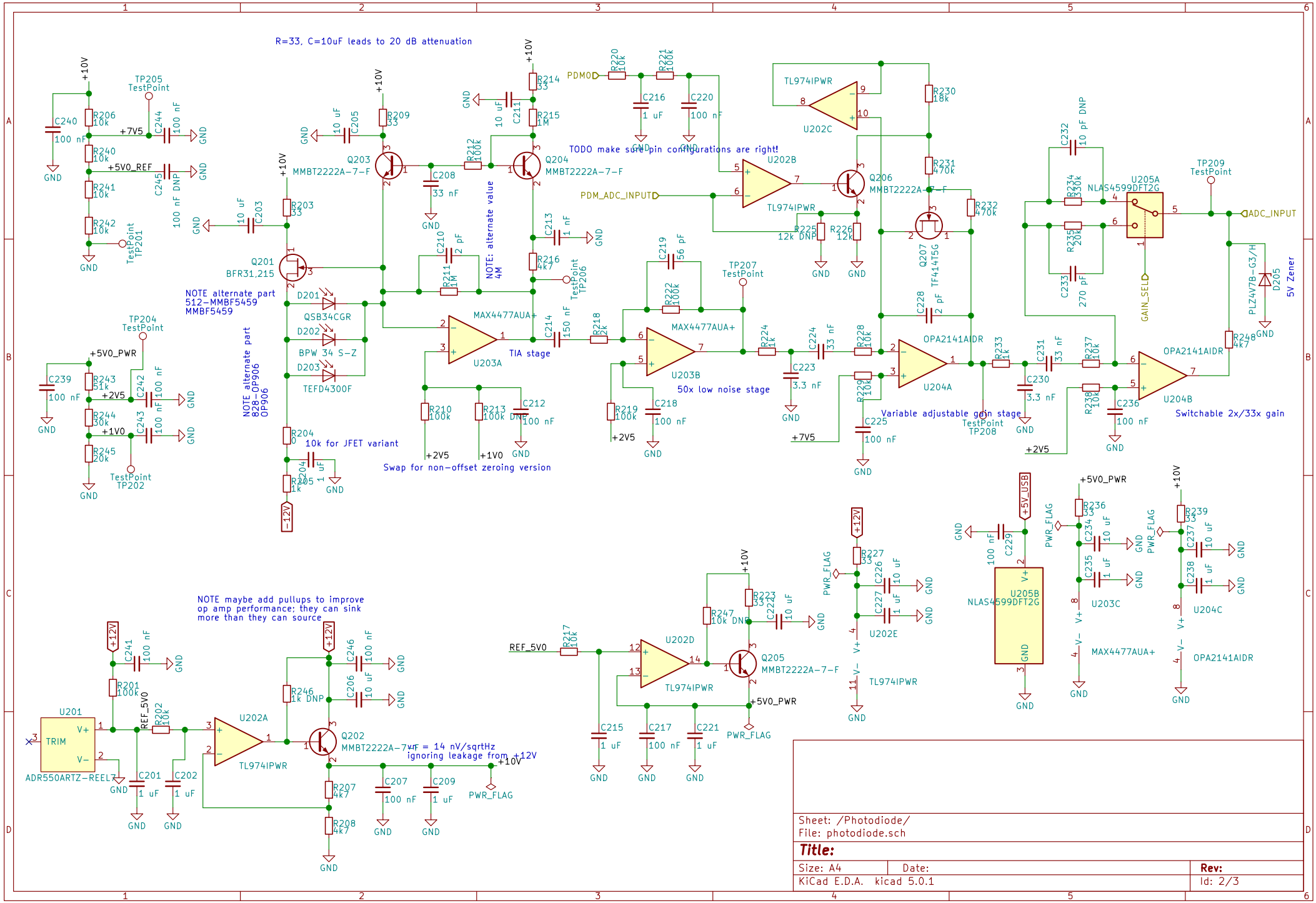
R=33, C=10uF leads to 20 dB attenuation
TODO make sure pin configurations are right!
NOTE alternate part
512-MMBF5459
MMBF5459
NOTE alternate part
828-OP906
OP906
NOTE: alternate value
4M
10k for JFET variant
Swap for non-offset zeroing version
TIA stage
50x low noise stage
Variable adjustable gain stage
Switchable 2x/33x gain
5V Zener
NOTE maybe add pullups to improve
op amp performance; they can sink
more than they can source
vn = 14 nV/sqrtHz
ignoring leakage from +12V
PDM0
PDM_ADC_INPUT
ADC_INPUT
GAIN_SEL0
REF_5V0
+5V_USB
+5V0_PWR
PWR_FLAG
TP205 TestPoint
TP204 TestPoint
TP202 TestPoint
TP201 TestPoint
TP206 TestPoint
TP207 TestPoint
TP208 TestPoint
TP209 TestPoint
Q203 MMBT2222A-7-F
Q204 MMBT2222A-7-F
Q201 BFR31.215
Q202 MMBT2222A-7-F
Q205 MMBT2222A-7-F
Q206 MMBT2222A-7-F
Q207 TF4414T5G
U201 ADR550ARTZ-REEL7
U202A TL974IPWR
U202B TL974IPWR
U202C TL974IPWR
U202D TL974IPWR
U202E TL974IPWR
U203A MAX4477AUA+
U203B MAX4477AUA+
U203C MAX4477AUA+
U204A OPA2141AIDR
U204B OPA2141AIDR
U204C OPA2141AIDR
U205A NLAS4599DFT2G
U205B NLAS4599DFT2G
D201 QSB34CGR
D202 BPW 34 S-Z
D203 TEFD4300F
D205 PLZ4V7B-G3/H
Sheet: /Photodiode/
File: photodiode.sch
Title:
Size: A4
Date:
Rev:
KiCad E.D.A. kicad 5.0.1
Id: 2/3

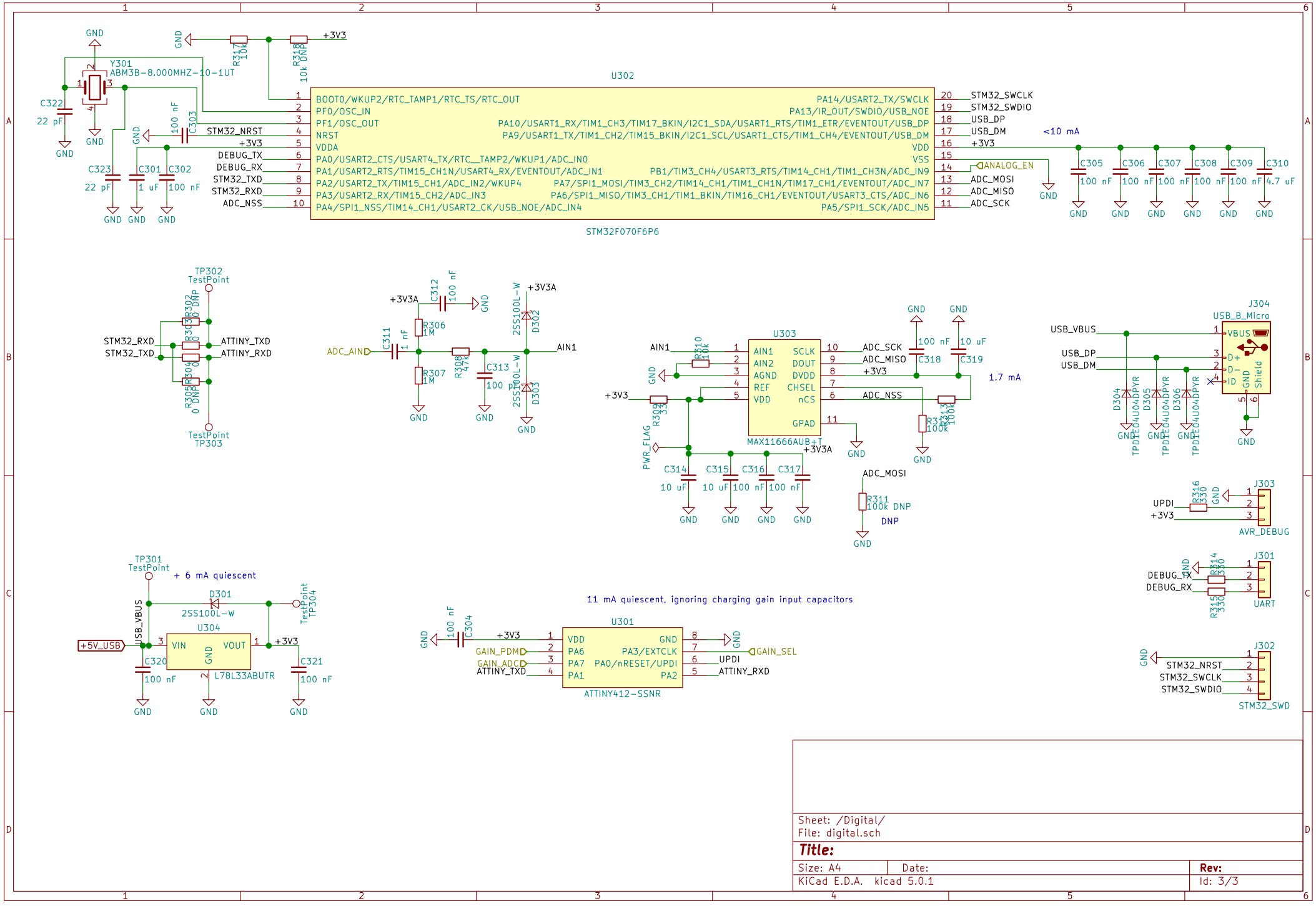

Sheet: /Digital/
File: digital.sch

Title:

Size: A4	Date:	Rev:
KiCad E.D.A. kicad 5.0.1		Id: 3/3