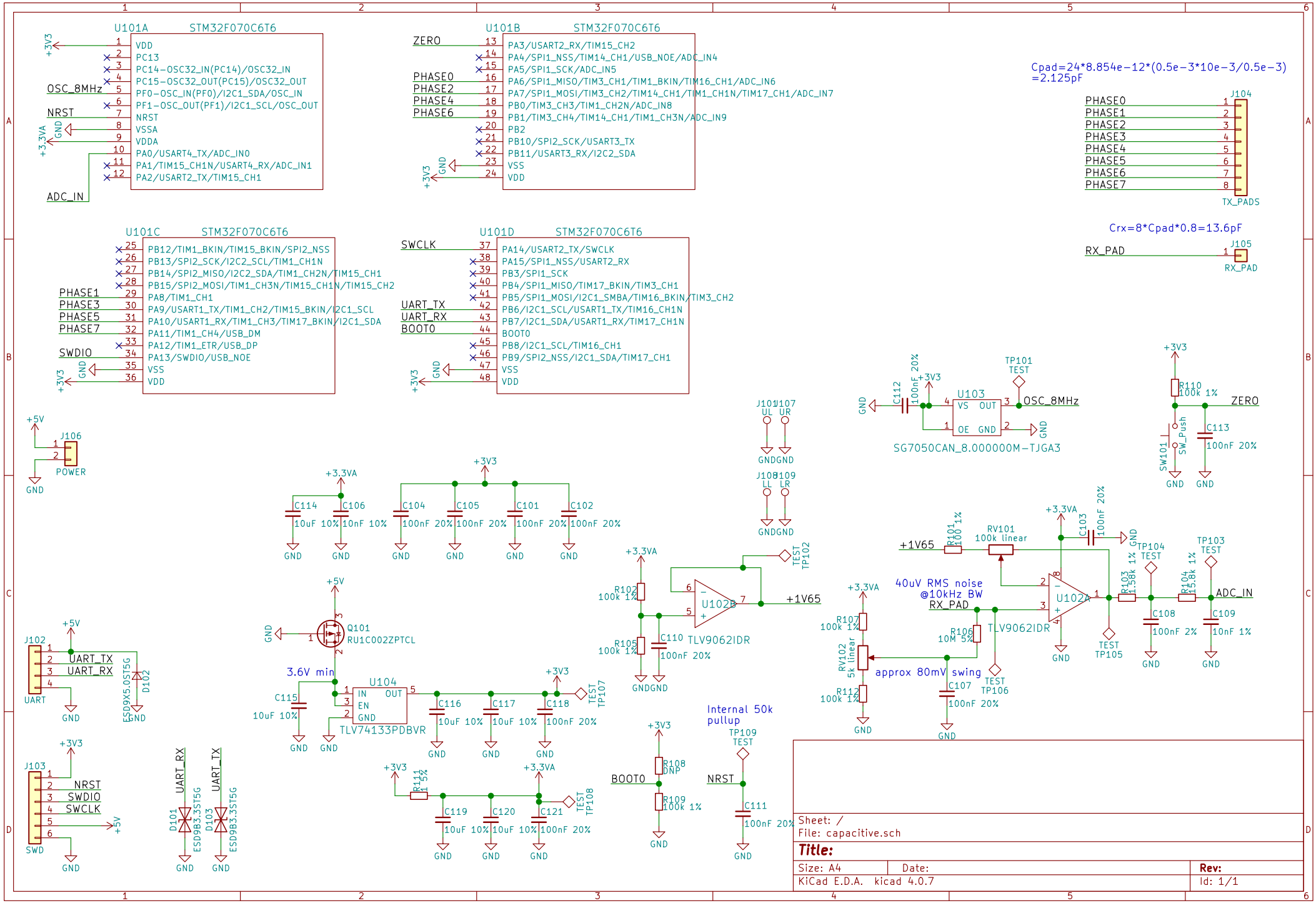
U101A STM32F070C6T6
VDD
PC13
PC14-OSC32_IN(PC14)/OSC32_IN
PC15-OSC32_OUT(PC15)/OSC32_OUT
PF0-OSC_IN(PF0)/I2C1_SDA/OSC_IN
PF1-OSC_OUT(PF1)/I2C1_SCL/OSC_OUT
NRST
VSSA
VDDA
PA0/USART4_TX/ADC_IN0
PA1/TIM15_CH1N/USART4_RX/ADC_IN1
PA2/USART2_TX/TIM15_CH1
OSC_8MHz
NRST
ADC_IN
+3V3
+3.3VA
GND
U101B STM32F070C6T6
PA3/USART2_RX/TIM15_CH2
PA4/SPI1_NSS/TIM14_CH1/USB_NOE/ADC_IN4
PA5/SPI1_SCK/ADC_IN5
PA6/SPI1_MISO/TIM3_CH1/TIM1_BKIN/TIM16_CH1/ADC_IN6
PA7/SPI1_MOSI/TIM3_CH2/TIM14_CH1/TIM1_CH1N/TIM17_CH1/ADC_IN7
PB0/TIM3_CH3/TIM1_CH2N/ADC_IN8
PB1/TIM3_CH4/TIM14_CH1/TIM1_CH3N/ADC_IN9
PB2
PB10/SPI2_SCK/USART3_TX
PB11/USART3_RX/I2C2_SDA
VSS
VDD
ZERO
PHASE0
PHASE2
PHASE4
PHASE6
U101C STM32F070C6T6
PB12/TIM1_BKIN/TIM15_BKIN/SPI2_NSS
PB13/SPI2_SCK/I2C2_SCL/TIM1_CH1N
PB14/SPI2_MISO/I2C2_SDA/TIM1_CH2N/TIM15_CH1
PB15/SPI2_MOSI/TIM1_CH3N/TIM15_CH1N/TIM15_CH2
PA8/TIM1_CH1
PA9/USART1_TX/TIM1_CH2/TIM15_BKIN/I2C1_SCL
PA10/USART1_RX/TIM1_CH3/TIM17_BKIN/I2C1_SDA
PA11/TIM1_CH4/USB_DM
PA12/TIM1_ETR/USB_DP
PA13/SWDIO/USB_NOE
VSS
VDD
PHASE1
PHASE3
PHASE5
PHASE7
SWDIO
U101D STM32F070C6T6
PA14/USART2_TX/SWCLK
PA15/SPI1_NSS/USART2_RX
PB3/SPI1_SCK
PB4/SPI1_MISO/TIM17_BKIN/TIM3_CH1
PB5/SPI1_MOSI/I2C1_SMBA/TIM16_BKIN/TIM3_CH2
PB6/I2C1_SCL/USART1_TX/TIM16_CH1N
PB7/I2C1_SDA/USART1_RX/TIM17_CH1N
BOOT0
PB8/I2C1_SCL/TIM16_CH1
PB9/SPI2_NSS/I2C1_SDA/TIM17_CH1
VSS
VDD
SWCLK
UART_TX
UART_RX
BOOT0
Cpad=24*8.854e-12*(0.5e-3*10e-3/0.5e-3)
=2.125pF
J104
PHASE0
PHASE1
PHASE2
PHASE3
PHASE4
PHASE5
PHASE6
PHASE7
TX_PADS
Crx=8*Cpad*0.8=13.6pF
J105
RX_PAD
RX_PAD
J106
POWER
+5V
GND
J101 UL
J107 UR
J108 LL
J109 LR
U103
VS OUT
OE GND
OSC_8MHz
TP101
TEST
C112
100nF 20%
SG7050CAN_8.000000M-TJGA3
R110
100k 1%
ZERO
SW101
SW_Push
C113
100nF 20%
C114
10uF 10%
C106
10nF 10%
C104
100nF 20%
C105
100nF 20%
C101
100nF 20%
C102
100nF 20%
Q101
RU1C002ZPTCL
3.6V min
U104
IN OUT
EN
GND
TLV74133PDBVR
C115
10uF 10%
C116
10uF 10%
C117
10uF 10%
C118
100nF 20%
TP107
TEST
R102
100k 1%
R105
100k 1%
C110
100nF 20%
U102B
TLV9062IDR
TP102
+1V65
R101
100 1%
RV101
100k linear
C103
100nF 20%
TP104
TEST
TP103
TEST
R103
1.58k 1%
R104
15.8k 1%
ADC_IN
C108
100nF 2%
C109
10nF 1%
40uV RMS noise
@10kHz BW
RX_PAD
R106
10M 5%
U102A
TLV9062IDR
TP105
TEST
TP106
TEST
R107
100k 1%
RV102
5k linear
R112
100k 1%
approx 80mV swing
C107
100nF 20%
J102
UART
UART_TX
UART_RX
D102
ESD9X5.0ST5G
J103
SWD
NRST
SWDIO
SWCLK
D101
ESD9B3.3ST5G
D103
ESD9B3.3ST5G
R111
1 5%
C119
10uF 10%
C120
10uF 10%
C121
100nF 20%
TP108
TEST
R108
DNP
R109
100k 1%
Internal 50k
pullup
TP109
TEST
C111
100nF 20%
Sheet: /
File: capacitive.sch
Title:
Size: A4
Date:
Rev:
KiCad E.D.A. kicad 4.0.7
Id: 1/1