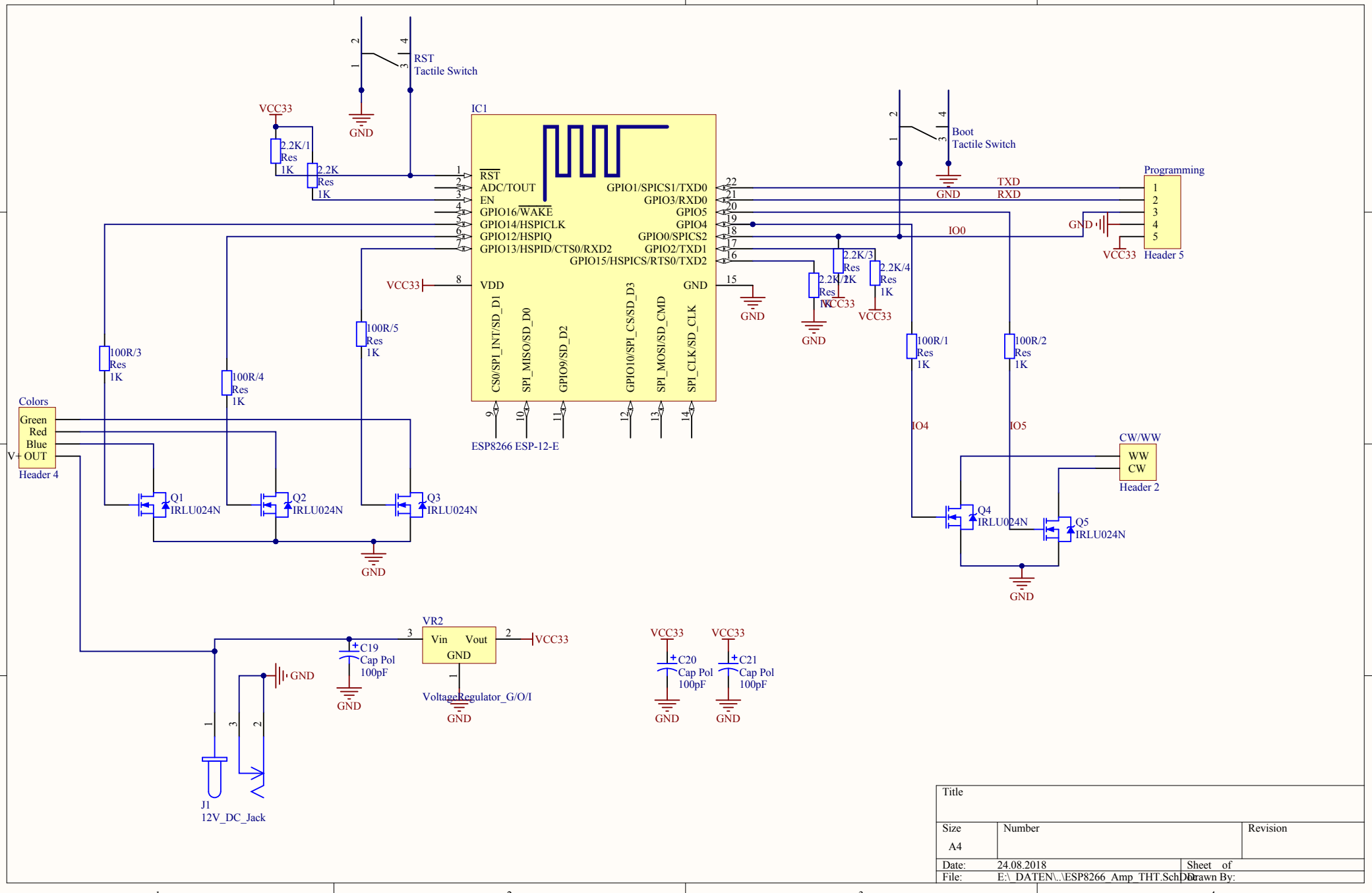

Title		
Size A4	Number	Revision
Date: 24.08.2018	Sheet of	
File: E:\ DATEN\..\ESP8266_Amp_THT.SchDoc	Drawn By:	