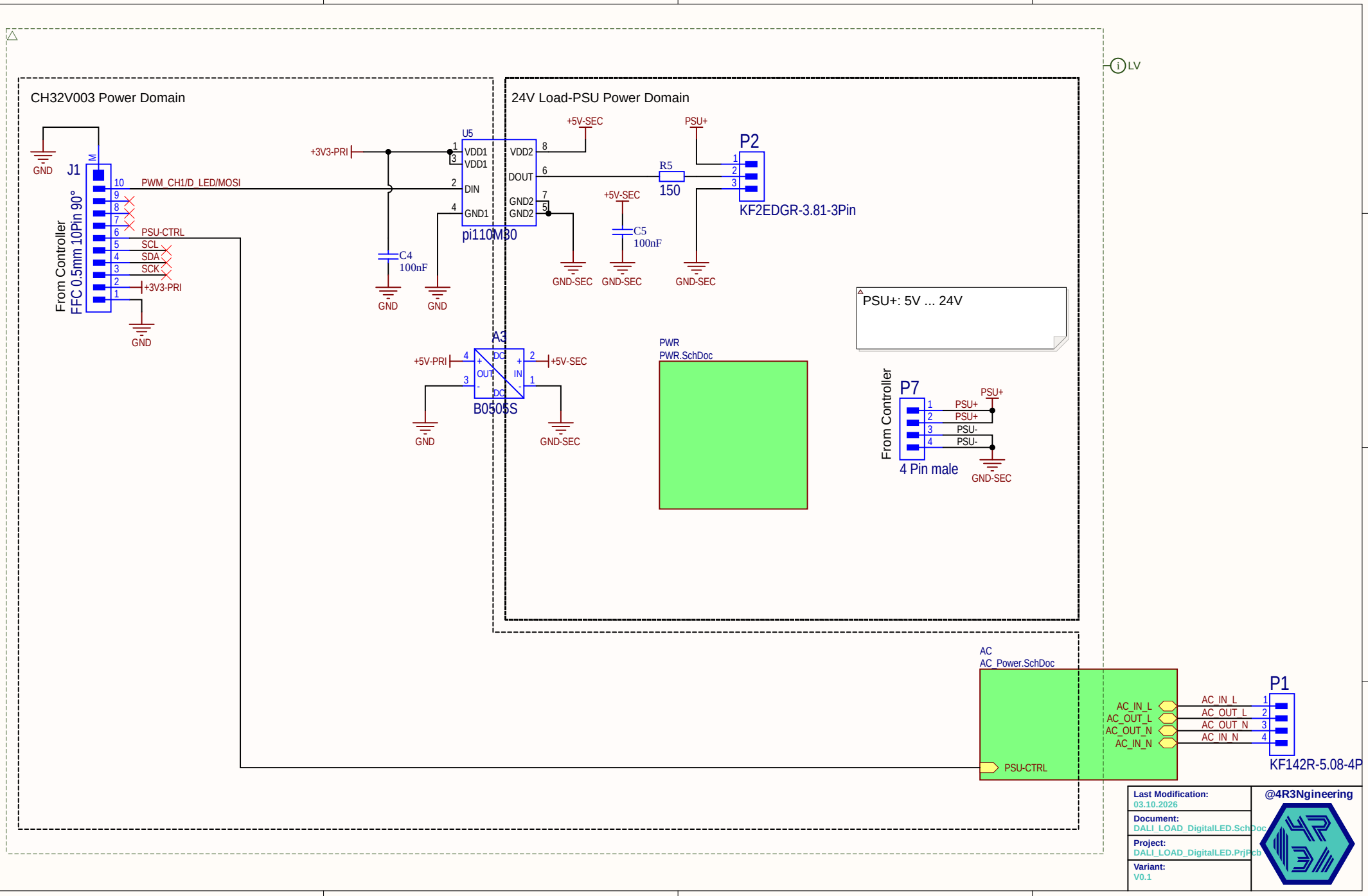
CH32V003 Power Domain
24V Load-PSU Power Domain
LV
J1
From Controller
FFC 0.5mm 10Pin 90°
PWM_CH1/D_LED/MOSI
PSU-CTRL
SCL
SDA
SCK
+3V3-PRI
GND
U5
VDD1
VDD1
DIN
GND1
VDD2
DOUT
GND2
GND2
pi110M30
C4
100nF
+5V-SEC
PSU+
R5
150
C5
100nF
GND-SEC
P2
KF2EDGR-3.81-3Pin
PSU+: 5V ... 24V
A3
+5V-PRI
+5V-SEC
B0505S
PWR
PWR.SchDoc
P7
From Controller
PSU+
PSU-
4 Pin male
AC
AC_Power.SchDoc
AC_IN_L
AC_OUT_L
AC_OUT_N
AC_IN_N
PSU-CTRL
P1
KF142R-5.08-4P
Last Modification:
03.10.2026
Document:
DALI_LOAD_DigitalLED.SchDoc
Project:
DALI_LOAD_DigitalLED.PrjPcb
Variant:
V0.1
@4R3Ngineering

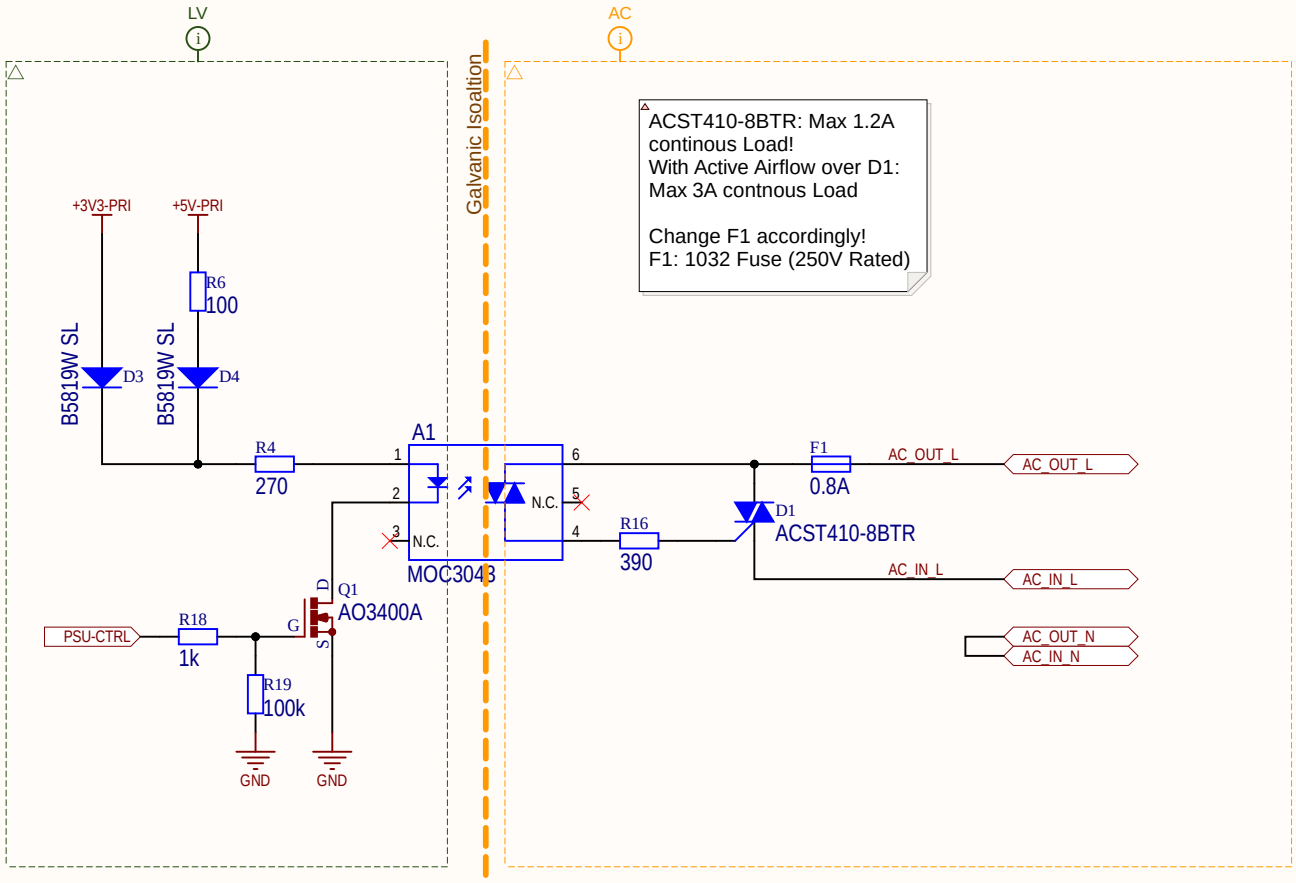

Last Modification: 03.10.2026	@4R3Ngineering
Document: AC_Power.SchDoc	
Project: DALI_LOAD_DigitalLED.PrjPcb	
Variant: V0.1	

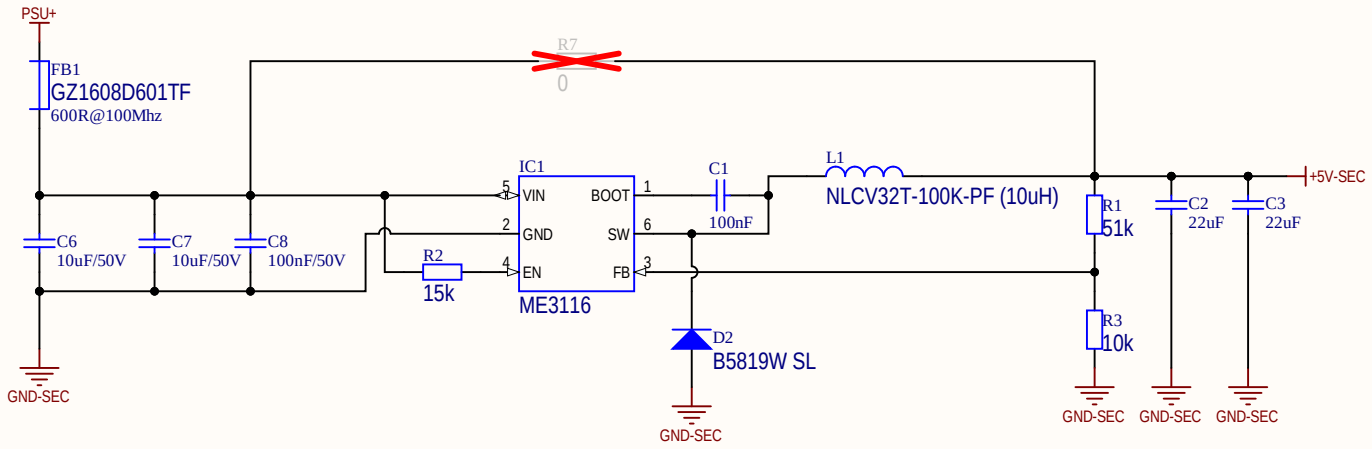

Last Modification: 03.10.2026	@4R3Ngineering
Document: PWR.SchDoc	
Project: DALI_LOAD_DigitalLED.PrjPcb	
Variant: V0.1	