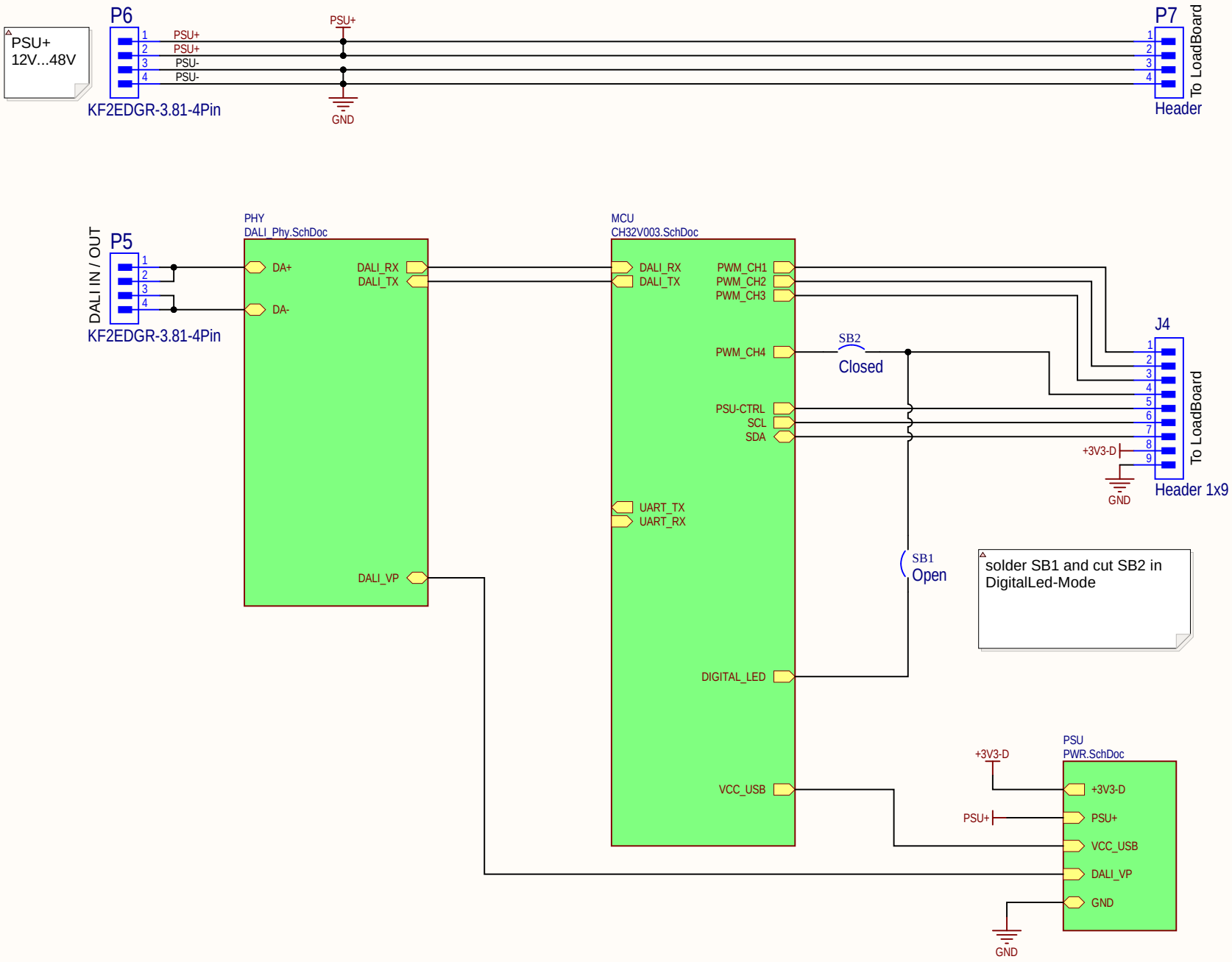

Last Modification: 20.03.2026	@4R3Ngineering
Document: EVG_Controller.SchDoc	
Project: DALI_EVG_Controller.PrjPcb	
Variant: V0.1	

USB HID Bootloader from CNLohr Compiled with:
<bootloader.c>
#define DISABLE_BOOTLOAD

#define BOOTLOADER_BTN_PORT D
#define BOOTLOADER_BTN_PIN 0
#define BOOTLOADER_BTN_TRIG_LEVEL 0

#define BOOTLOADER_TIMEOUT_PWR 0

<usb_config.h>
#define USB_PORT D
#define USB_PIN_DP 4
#define USB_PIN_DM 3

#define USB_PIN_DPU 0

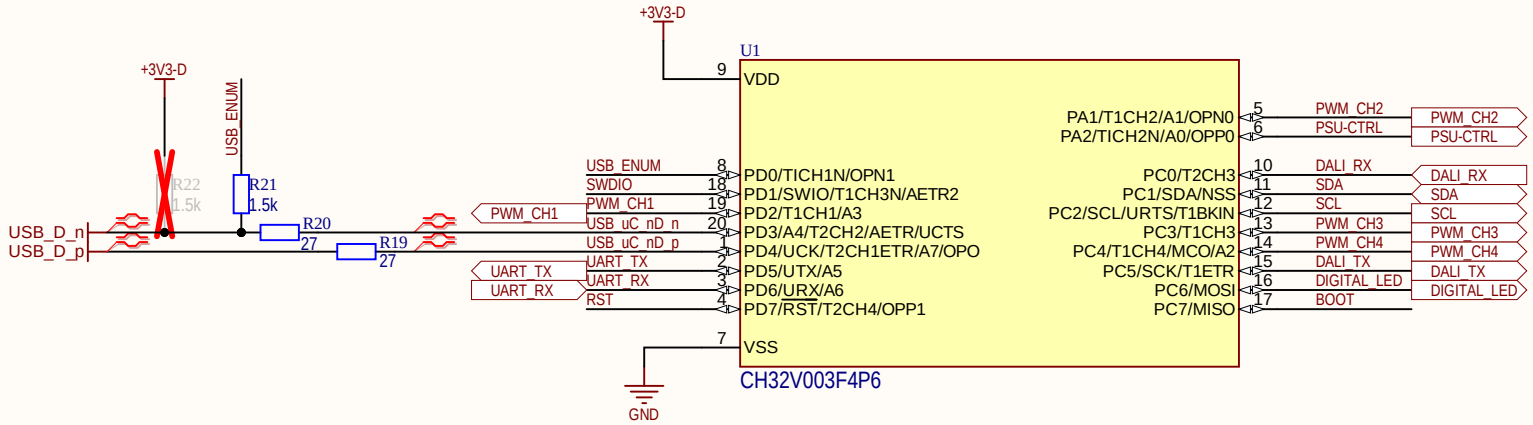

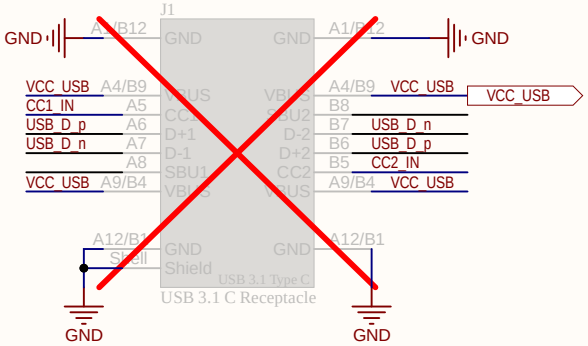

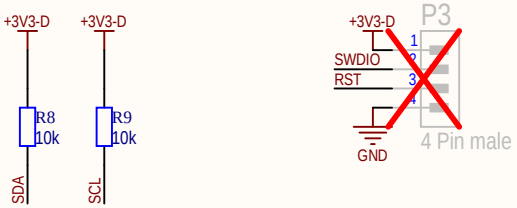

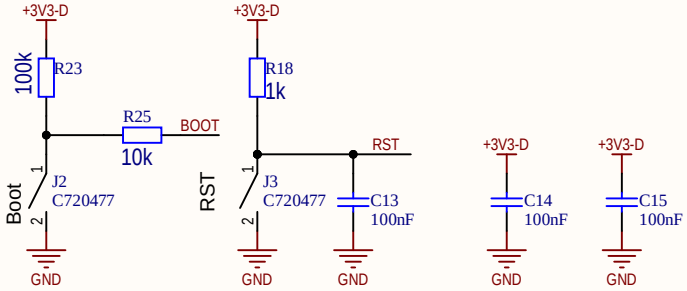

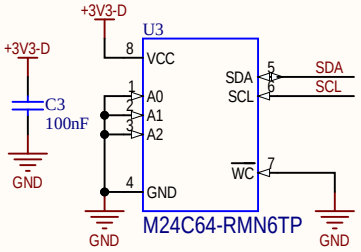

Last Modification: 20.03.2026	@4R3Ngineering
Document: CH32V003.SchDoc	
Project: DALI_EVG_Controller.PrjPcb	
Variant: V0.1	

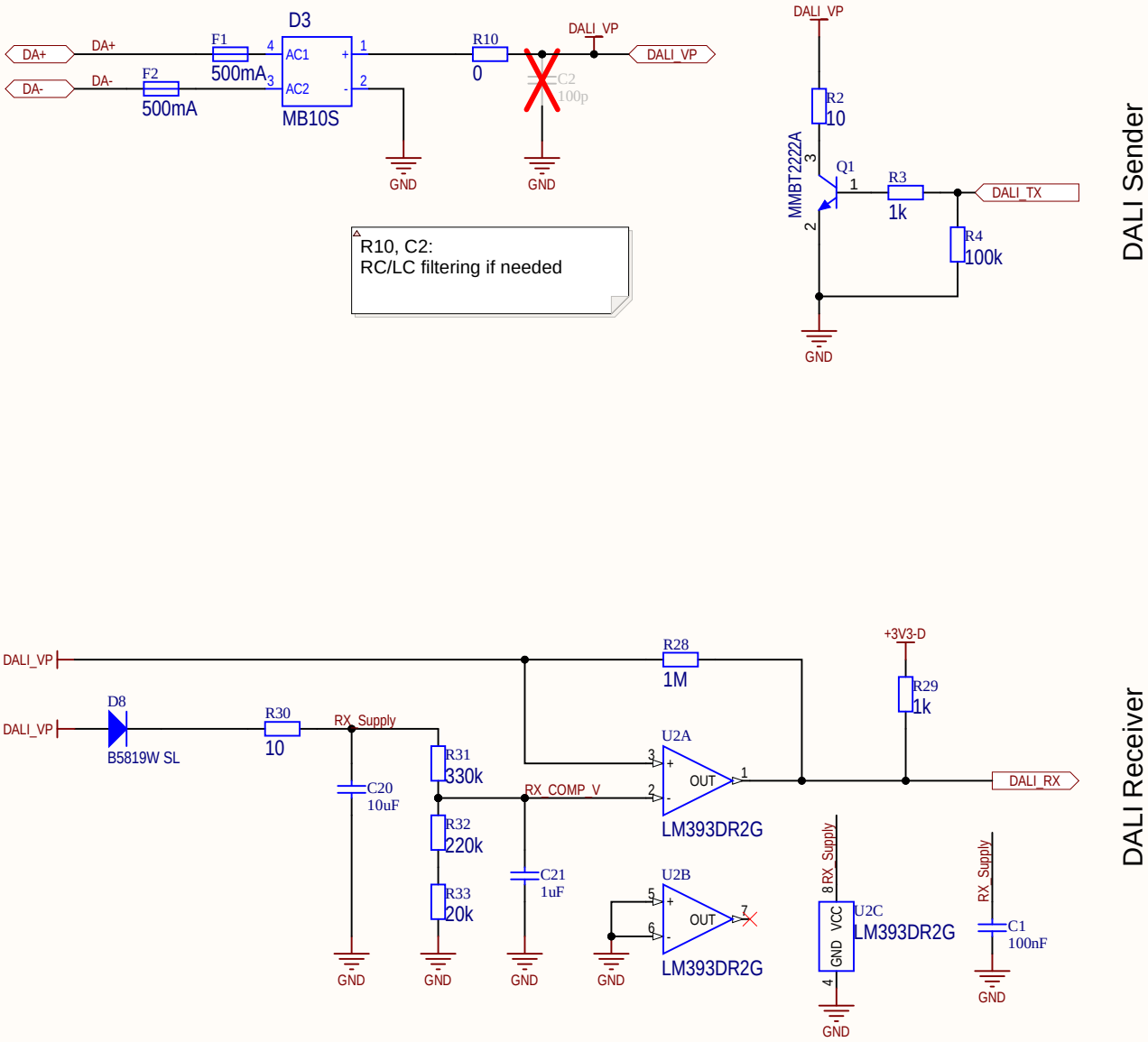

R10, C2:
RC/LC filtering if needed

Last Modification: 20.03.2026	@4R3Ngineering
Document: DALI_Phy.SchDoc	
Project: DALI_EVG_Controller.PrjPcb	
Variant: V0.1	

Active Bus Disconnect:
When PSU+ is Powered, Q4 will conduct, puling base from Q3 low. Q3 conduct, shunting Gate-Q2 to Source-Q2.

This ensures that the whole system is powered by it's own PSU once the EVG wakes up, EVEN if PSU+ is lesser than DALI_VP.

D1 ensures gate voltage does not exceed 18V, D2 ensures in case of DALI-Voltage >18V no additional load current is flowing via DALI_VP.

System is designed to stay under 2mA standby current (can be measured via R27)

R27 doubles as inrush limiter

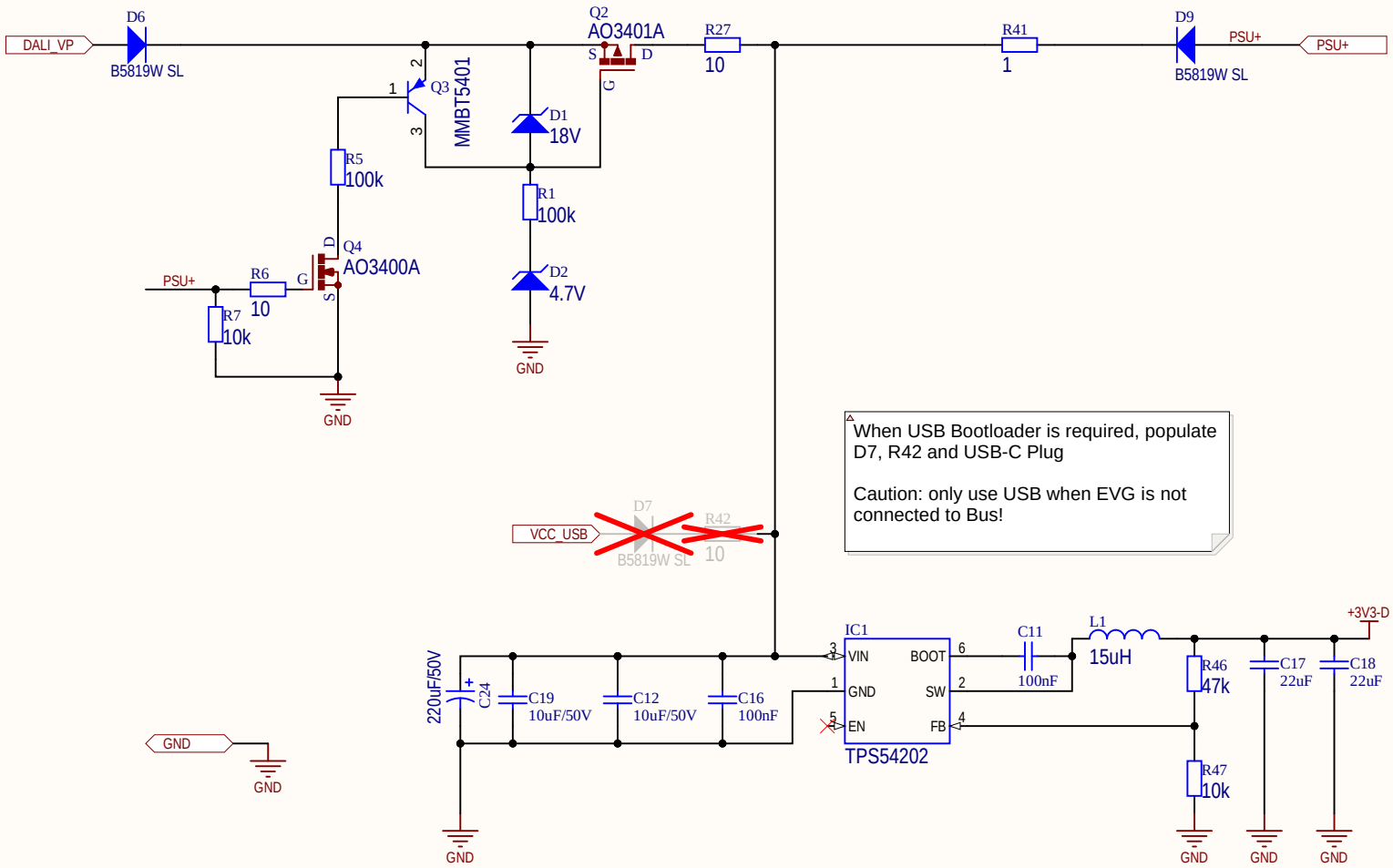

When USB Bootloader is required, populate D7, R42 and USB-C Plug

Caution: only use USB when EVG is not connected to Bus!

Last Modification: 20.03.2026	@4R3Ngineering
Document: PWR.SchDoc	
Project: DALI_EVG_Controller.PrjPcb	
Variant: V0.1	