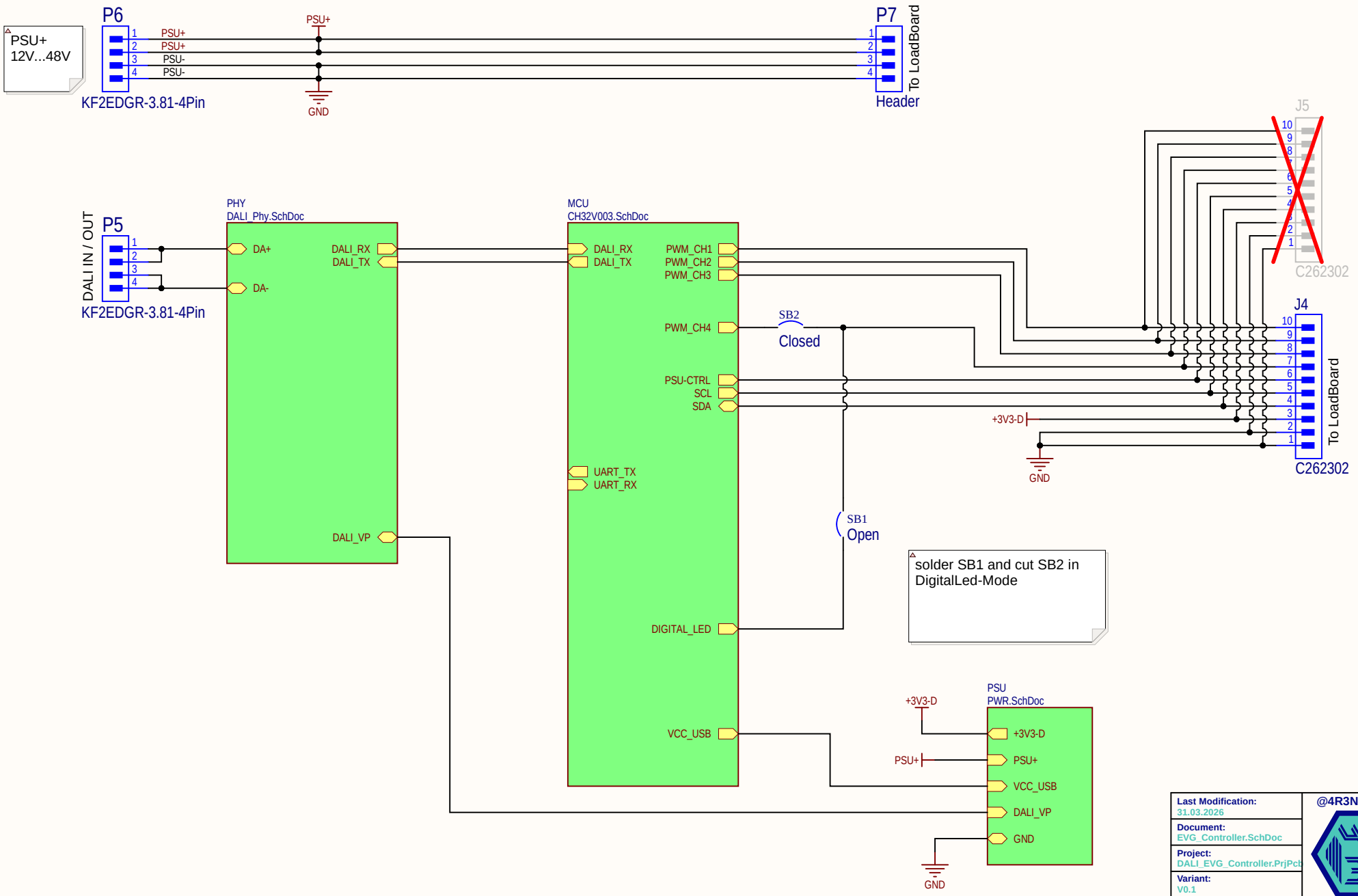
PSU+
12V...48V
P6
KF2EDGR-3.81-4Pin
PSU+
PSU+
PSU-
PSU-
GND
P7
To LoadBoard
Header
P5
DALI IN / OUT
KF2EDGR-3.81-4Pin
PHY
DALI_Phy.SchDoc
DA+
DA-
DALI_RX
DALI_TX
DALI_VP
MCU
CH32V003.SchDoc
DALI_RX
DALI_TX
PWM_CH1
PWM_CH2
PWM_CH3
PWM_CH4
PSU-CTRL
SCL
SDA
UART_TX
UART_RX
DIGITAL_LED
VCC_USB
SB2
Closed
SB1
Open
J5
C262302
J4
To LoadBoard
C262302
+3V3-D
GND
solder SB1 and cut SB2 in DigitalLed-Mode
PSU
PWR.SchDoc
+3V3-D
PSU+
VCC_USB
DALI_VP
GND
+3V3-D
PSU+
GND
Last Modification:
31.03.2026
Document:
EVG_Controller.SchDoc
Project:
DALI_EVG_Controller.PrjPcb
Variant:
V0.1
@4R3Ngineering

USB HID Bootloader from CNLohr Compiled with:
<bootloader.c>
#define DISABLE_BOOTLOAD

#define BOOTLOADER_BTN_PORT D
#define BOOTLOADER_BTN_PIN 0
#define BOOTLOADER_BTN_TRIG_LEVEL 0

#define BOOTLOADER_TIMEOUT_PWR 0

<usb_config.h>
#define USB_PORT D
#define USB_PIN_DP 4
#define USB_PIN_DM 3

#define USB_PIN_DPU 0

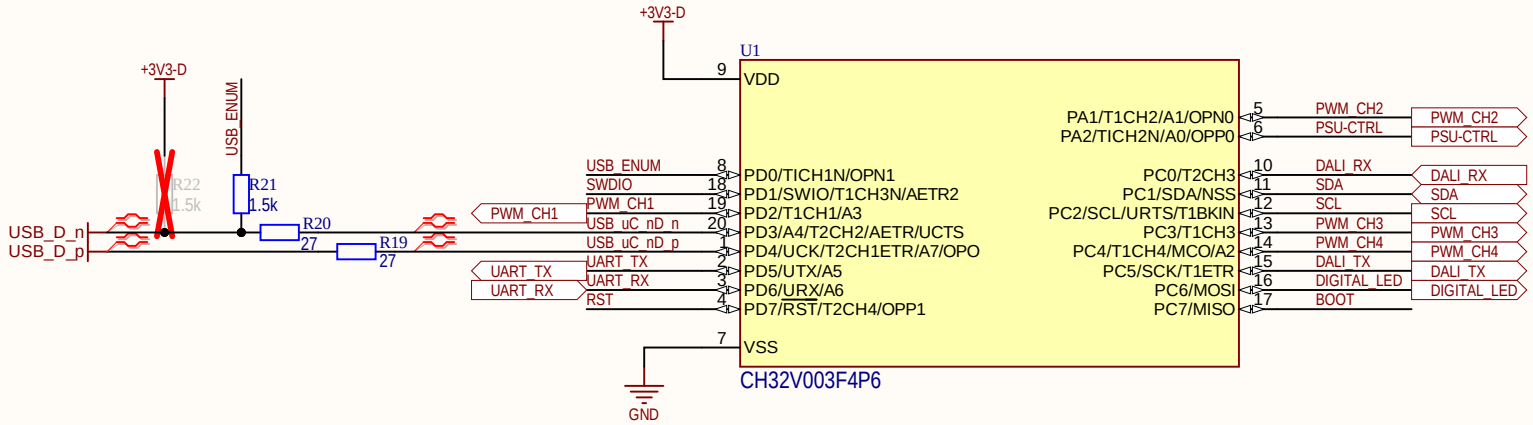

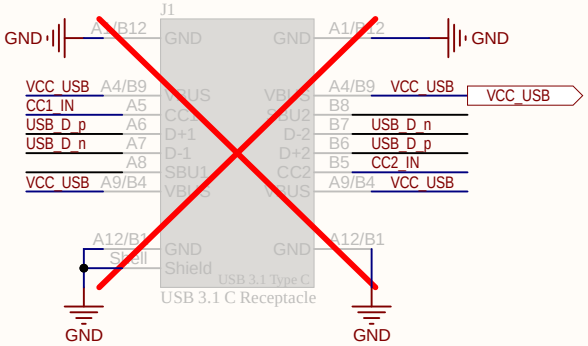

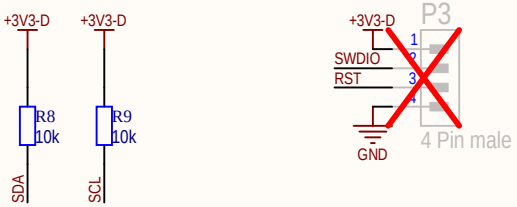

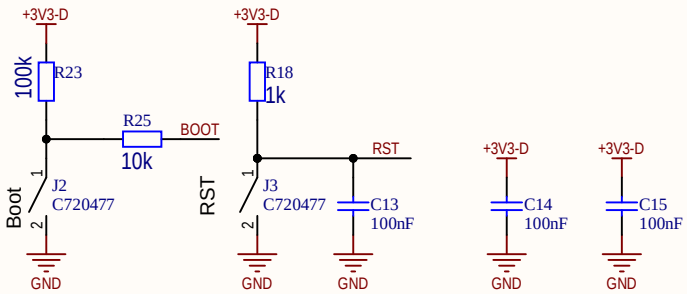

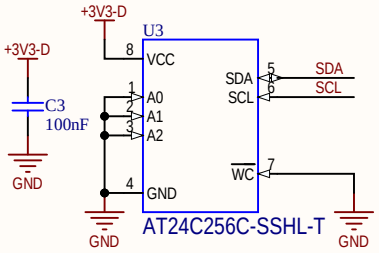

Last Modification: 31.03.2026	@4R3Ngineering
Document: CH32V003.SchDoc	
Project: DALI_EVG_Controller.PrjPcb	
Variant: V0.1	

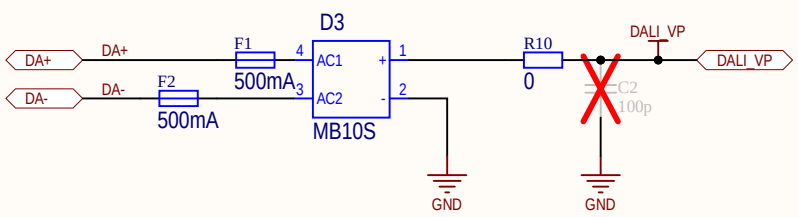

R10, C2:
RC/LC filtering if needed

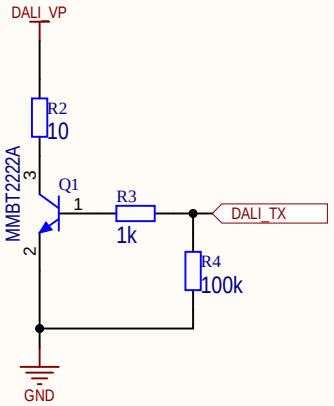

DALI Sender

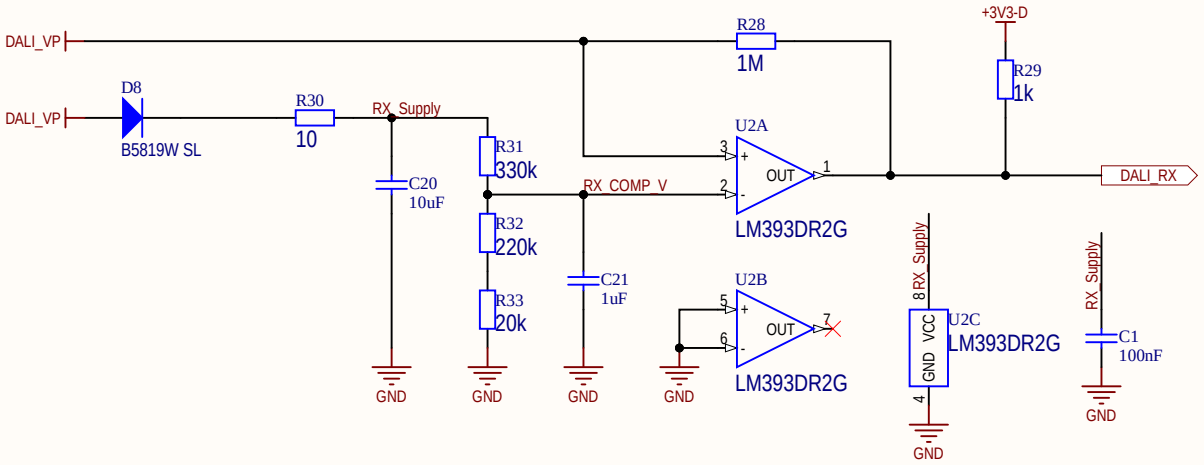

DALI Receiver

Last Modification: 31.03.2026	@4R3Ngineering
Document: DALI_Phy.SchDoc	
Project: DALI_EVG_Controller.PrjPcb	
Variant: V0.1	

Active Bus Disconnect:
When PSU+ is Powered, Q4 will conduct, puling base from Q3 low. Q3 conduct, shunting Gate-Q2 to Source-Q2.

This ensures that the whole system is powered by it's own PSU once the EVG wakes up, EVEN if PSU+ is lesser than DALI_VP.

D1 ensures gate voltage does not exceed 18V, D2 ensures in case of DALI-Voltage >18V no additional load current is flowing via DALI_VP.

System is designed to stay under 2mA standby current (can be measured via R27)

R27 doubles as inrush limiter

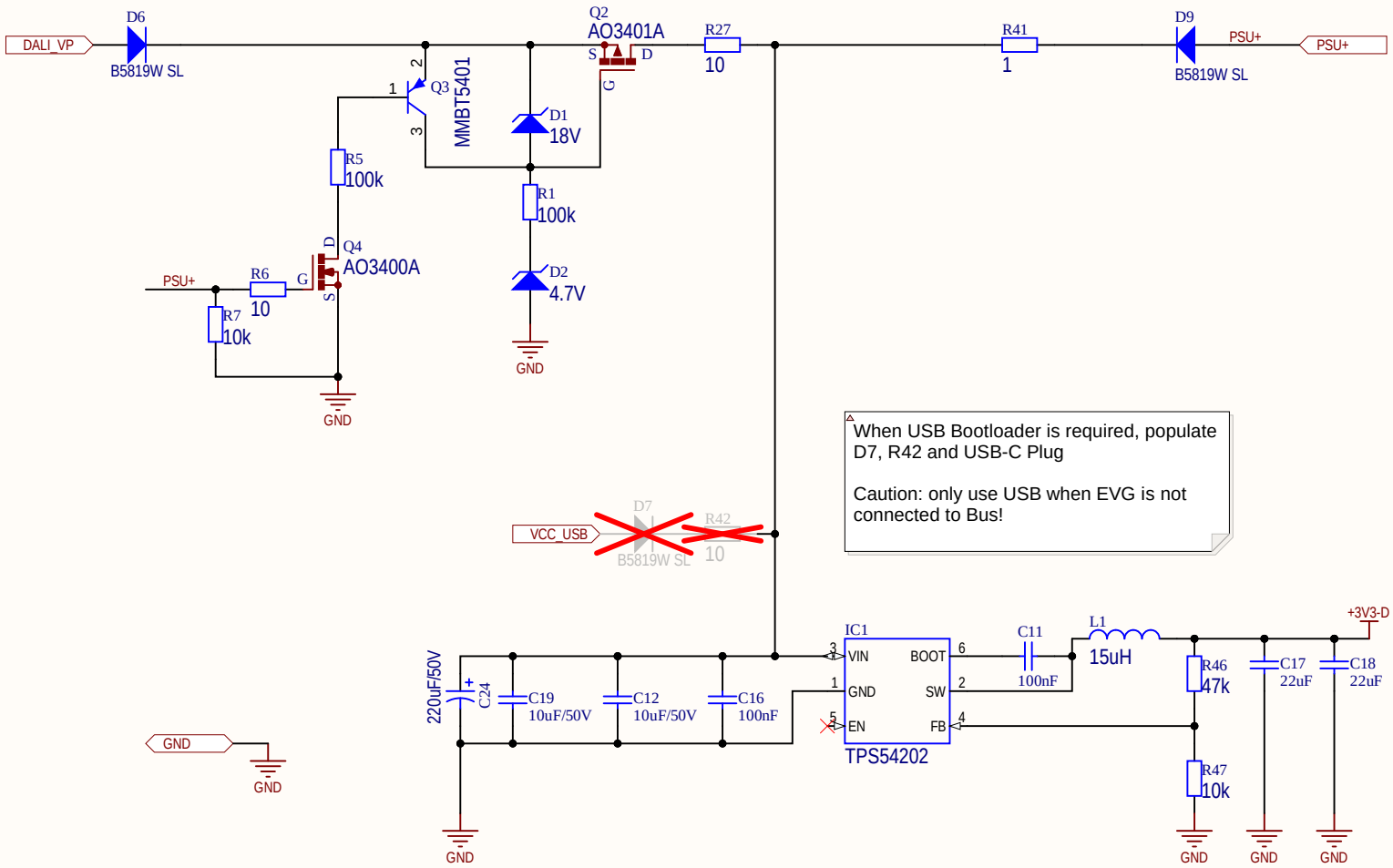

When USB Bootloader is required, populate D7, R42 and USB-C Plug

Caution: only use USB when EVG is not connected to Bus!

Last Modification: 31.03.2026	@4R3Ngineering
Document: PWR.SchDoc	
Project: DALI_EVG_Controller.PrjPcb	
Variant: V0.1	