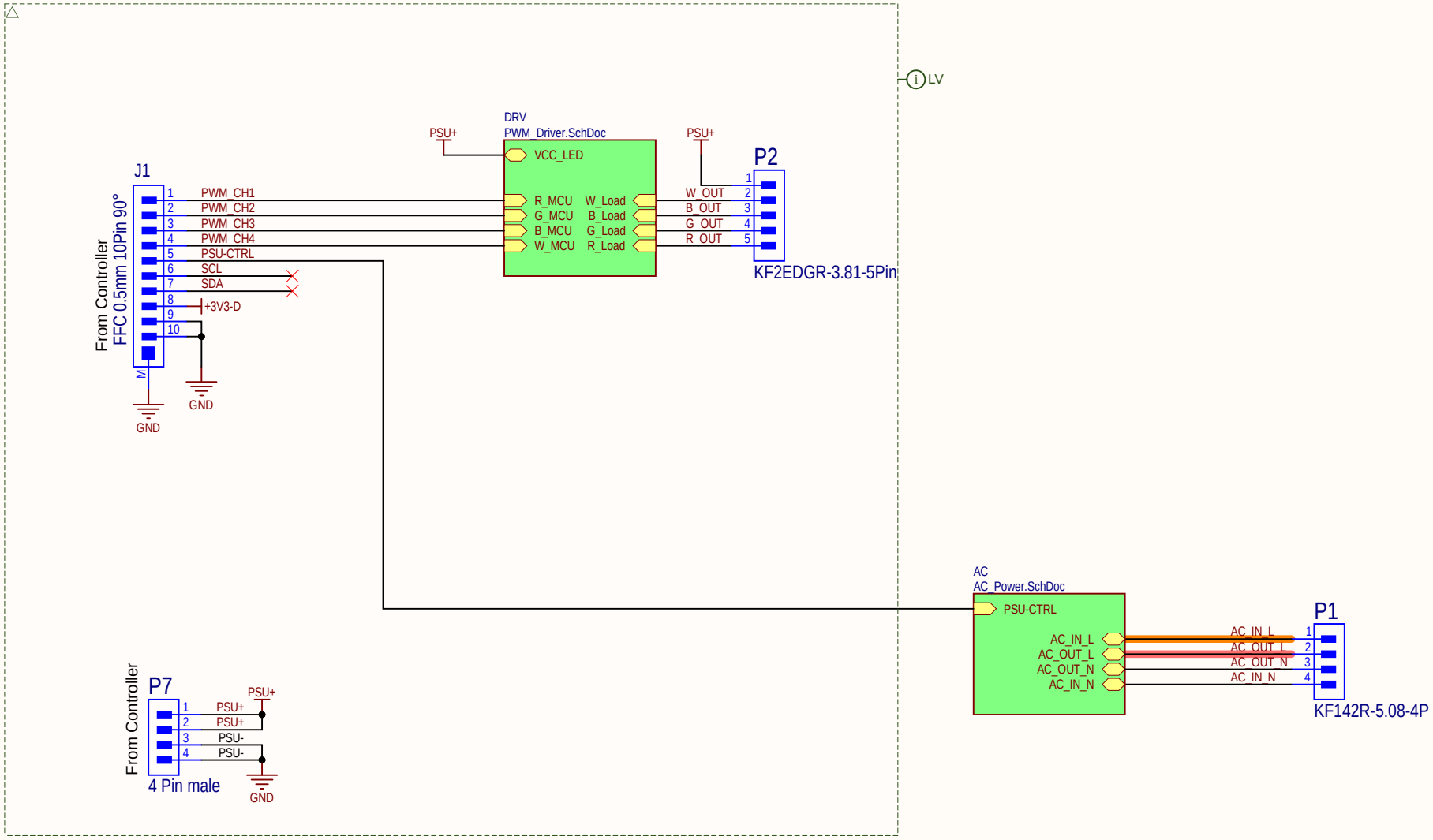

Last Modification: 24.03.2026	@4R3Ngineering
Document: DALI_LOAD_250W.SchDoc	
Project: DALI_EVG_LoadBoard.PrjPcb	
Variant: V0.1	

VCC_LED: 12V to 48V

VCC_LED — VCC_LED

Tapped into LED-PSU --> Crude 18V Regulation

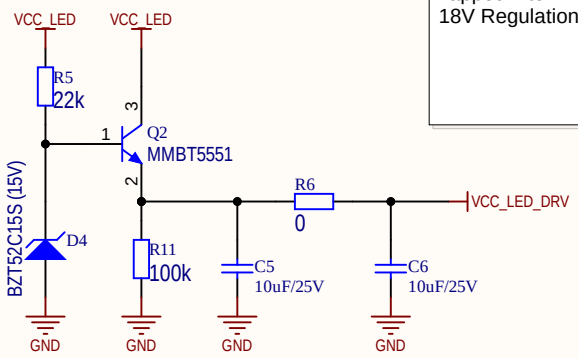

Output Stage

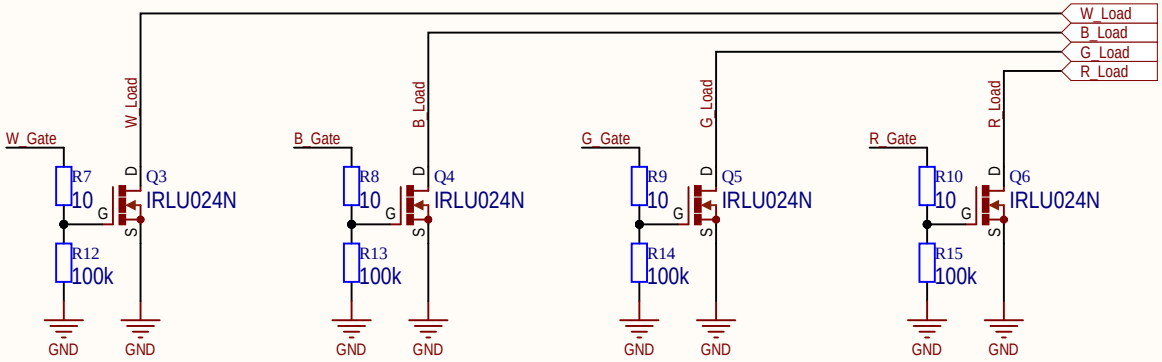

Output Driver

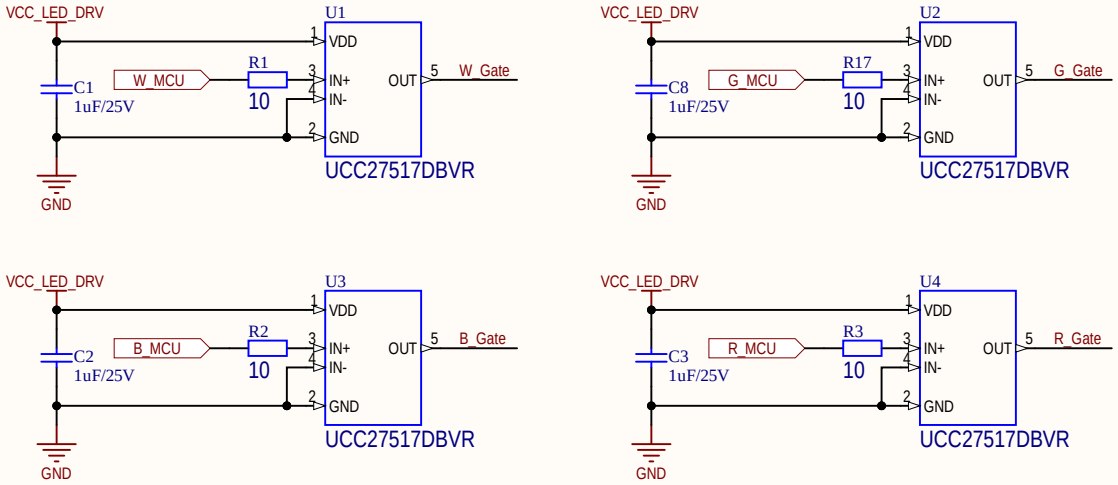

Last Modification: 24.03.2026	@4R3Ngineering
Document: PWM_Driver.SchDoc	
Project: DALI_EVG_LoadBoard.PrjPcb	
Variant: V0.1	

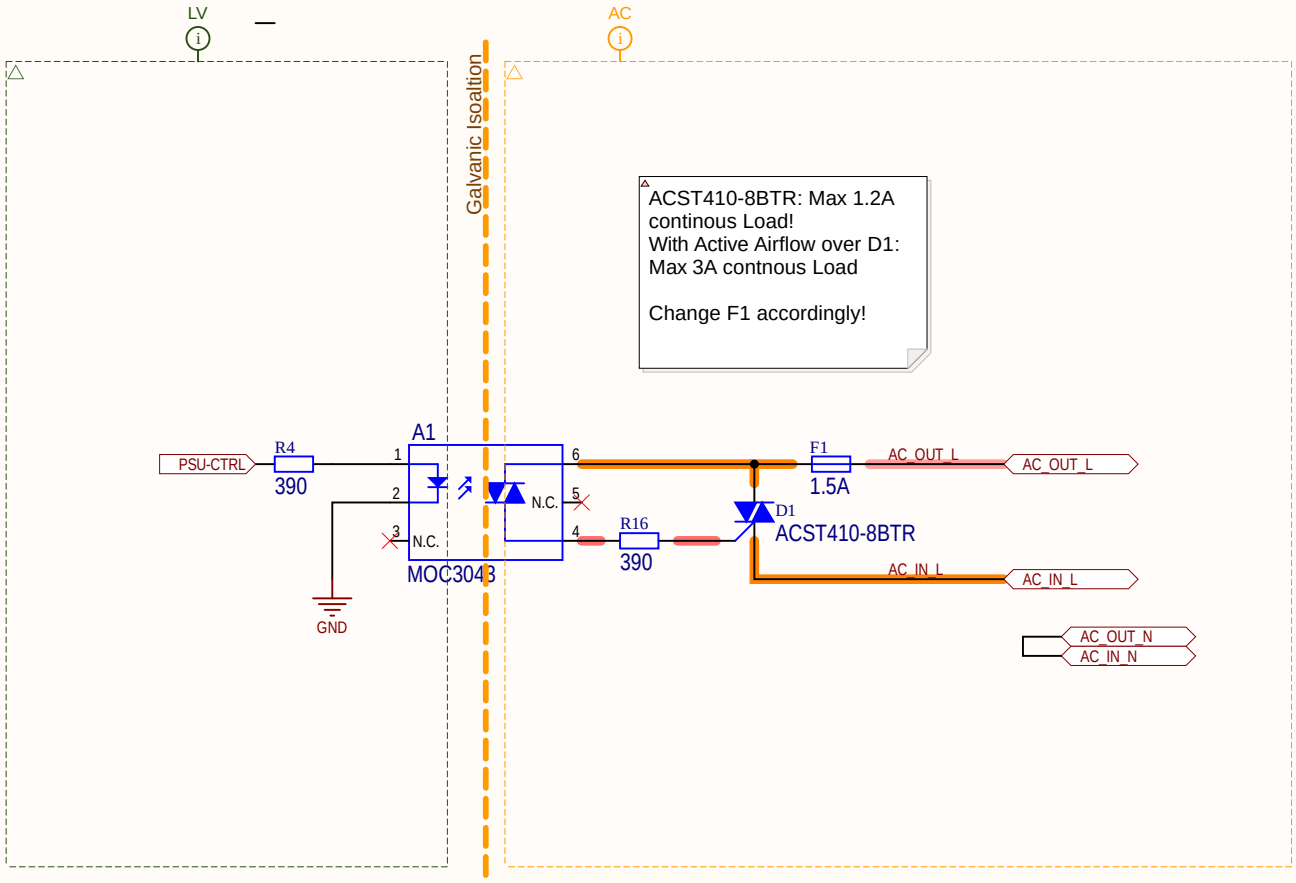

Last Modification: 24.03.2026	@4R3Ngineering
Document: AC_Power.SchDoc	
Project: DALI_EVG_LoadBoard.PrjPcb	
Variant: V0.1	