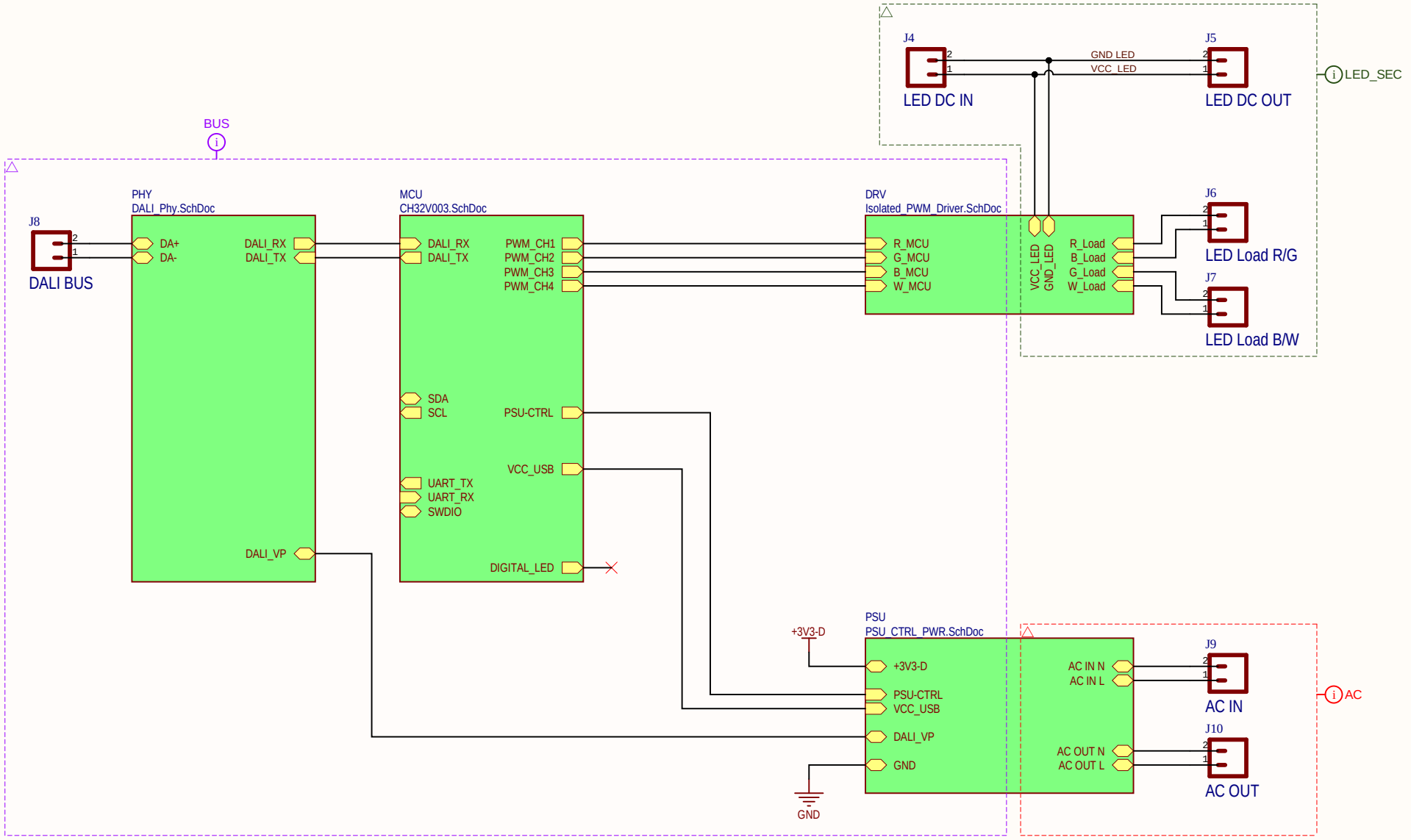

Last Modification: 11.03.2026	@4R3Ngineering
Document: DALI_EVG.SchDoc	
Project: DALI_EVG.PrjPcb	
Variant: V0.1	

USB HID Bootloader from CNLohr Compiled with:
<bootloader.c>
#define DISABLE_BOOTLOAD

#define BOOTLOADER_BTN_PORT D
#define BOOTLOADER_BTN_PIN 0
#define BOOTLOADER_BTN_TRIG_LEVEL 0

#define BOOTLOADER_TIMEOUT_PWR 0

<usb_config.h>
#define USB_PORT D
#define USB_PIN_DP 4
#define USB_PIN_DM 3

#define USB_PIN_DPU 0

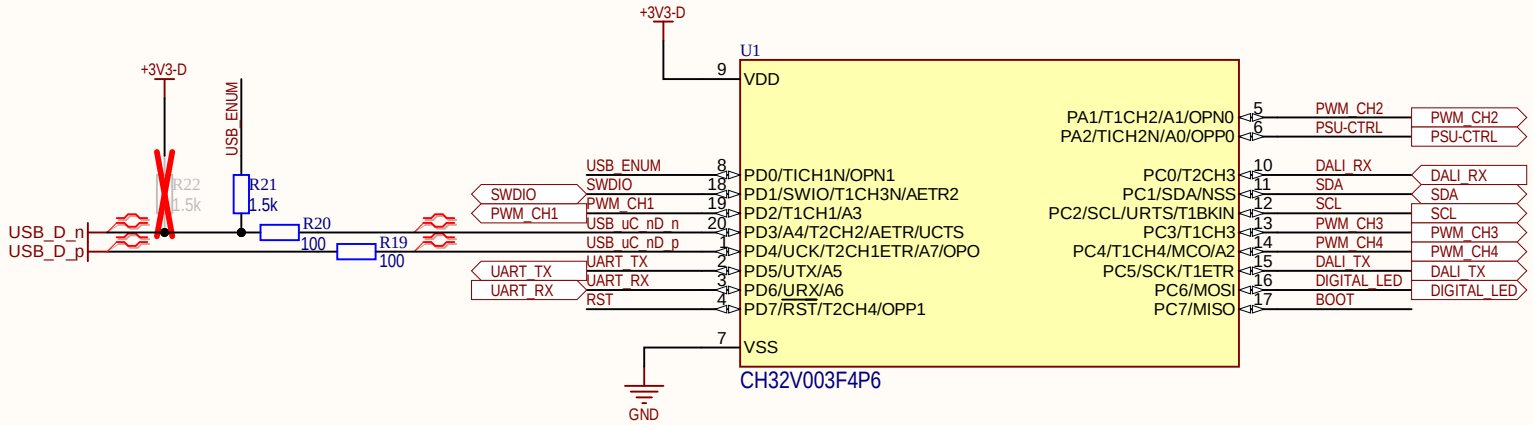

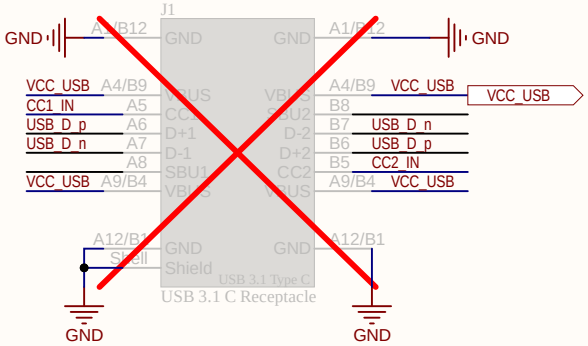

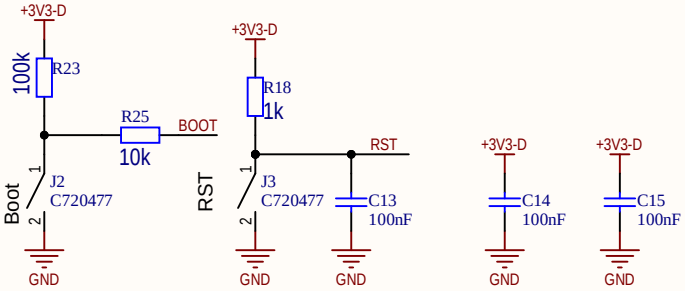

Last Modification: 11.03.2026	@4R3Ngineering
Document: CH32V003.SchDoc	
Project: DALI_EVG.PrjPcb	
Variant: V0.1	

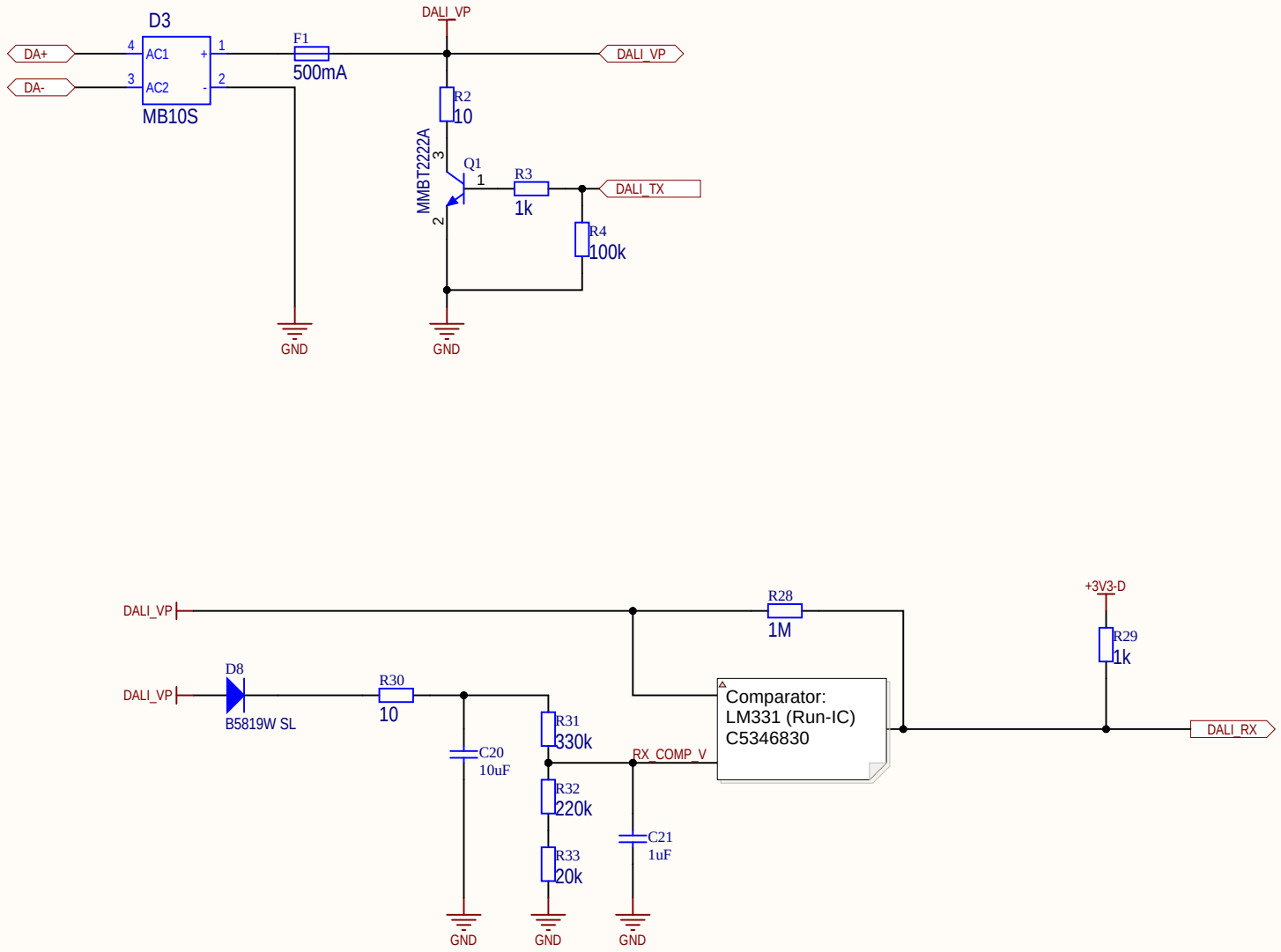

Last Modification: 11.03.2026	@4R3Ngineering
Document: DALI_Phy.SchDoc	
Project: DALI_EVG.PrjPcb	
Variant: V0.1	

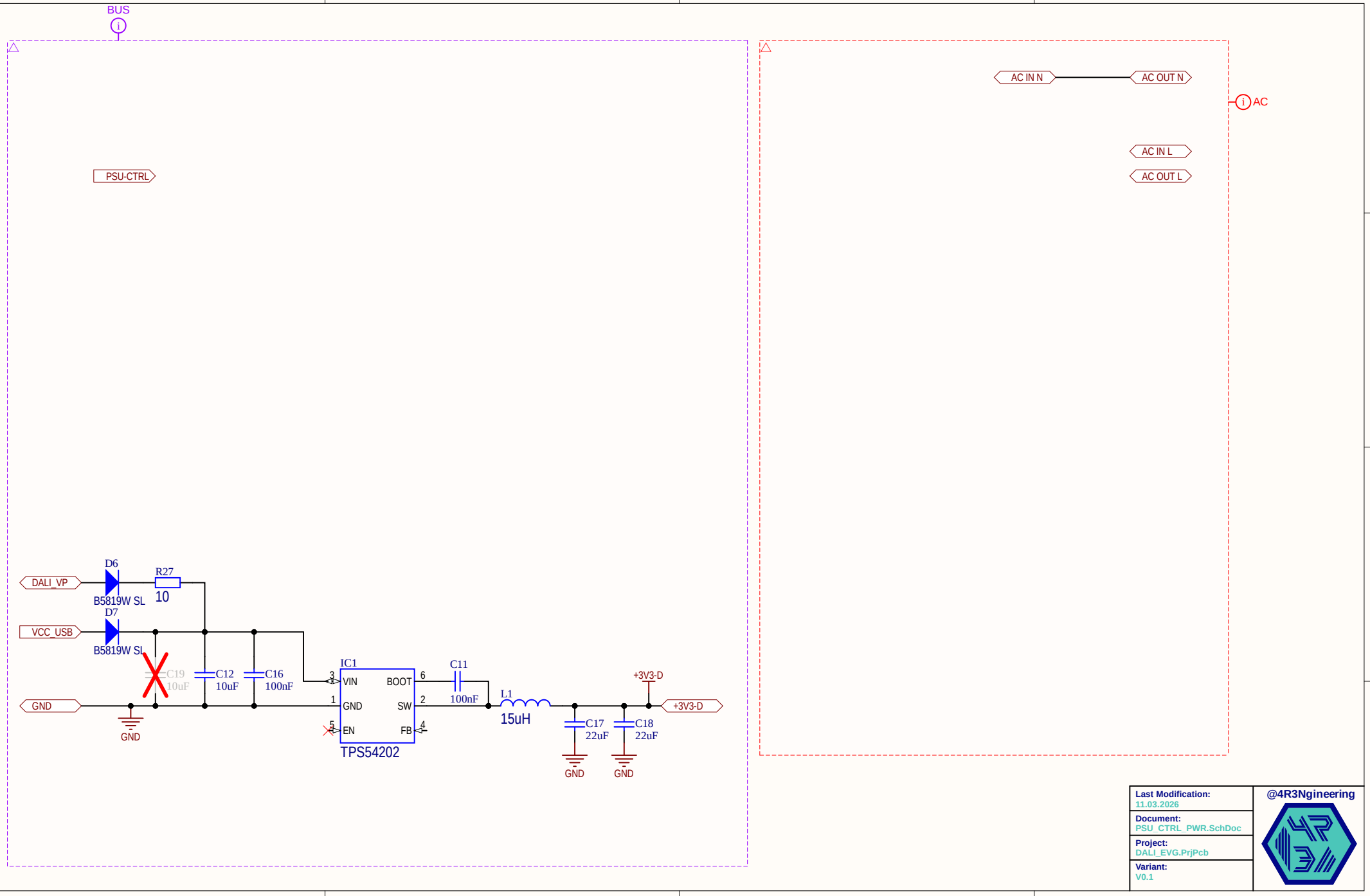
BUS
PSU-CTRL
DALI_VP
VCC_USB
GND
D6
B5819W SL
D7
B5819W SL
R27
10
C19
10uF
C12
10uF
C16
100nF
IC1
VIN
GND
EN
BOOT
SW
FB
TPS54202
C11
100nF
L1
15uH
C17
22uF
C18
22uF
+3V3-D
AC IN N
AC OUT N
AC
AC IN L
AC OUT L
Last Modification:
11.03.2026
Document:
PSU_CTRL_PWR.SchDoc
Project:
DALI_EVG.PrjPcb
Variant:
V0.1
@4R3Ngineering

VCC_LED: 12V to 48V

VCC_LED
GND_LED

Tapped into LED-PSU --> Crude 18V Regulation

VCC_LED
VCC_LED
R5
22k
Q2
MMBT5551
BZT52C18S (18V)
D4
R11
100k
R6
0
C5
10uF
C6
10uF
VCC_LED_DRV
GND_LED

Output Driver

LED_SEC

R_Load
G_Load
B_Load
W_Load

R_Gate
R7
10
R12
100k
Q3
IRLU024N

G_Gate
R8
10
R13
100k
Q4
IRLU024N

B_Gate
R9
10
R14
100k
Q5
IRLU024N

W_Gate
R10
10
R15
100k
Q6
IRLU024N

GND_LED

BUS
LED_SEC

R_MCU
R16
150
U3
Anode
N.C.
Cathode
VCC
V OUT
GND
SLM343CK-DG
VCC_LED_DRV
C7
100nF
R_Gate
GND
GND_LED

G_MCU
R24
150
U6
C10
100nF
G_Gate

B_MCU
R17
150
U4
C8
100nF
B_Gate

W_MCU
R26
150
U5
C9
100nF
W_Gate

Last Modification: 11.03.2026	@4R3Ngineering
Document: Isolated_PWM_Driver.SchDoc	
Project: DALI_EVG.PrjPcb	
Variant: V0.1	