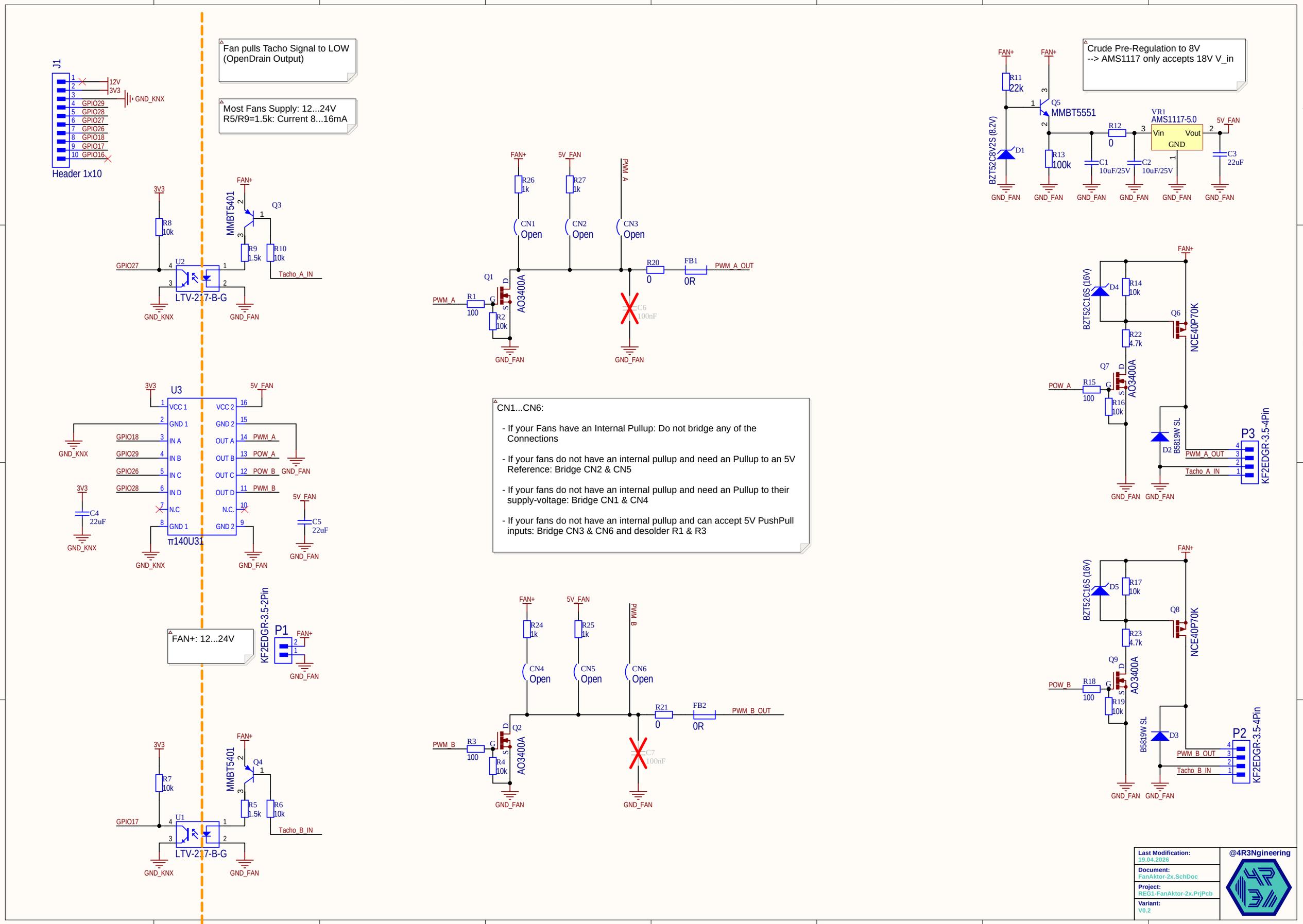

Last Modification: 19.04.2026	@4R3Ngineering
Document: FanAktor-2x.SchDoc	
Project: REG1-FanAktor-2x.PrjPcb	
Variant: V0.2	