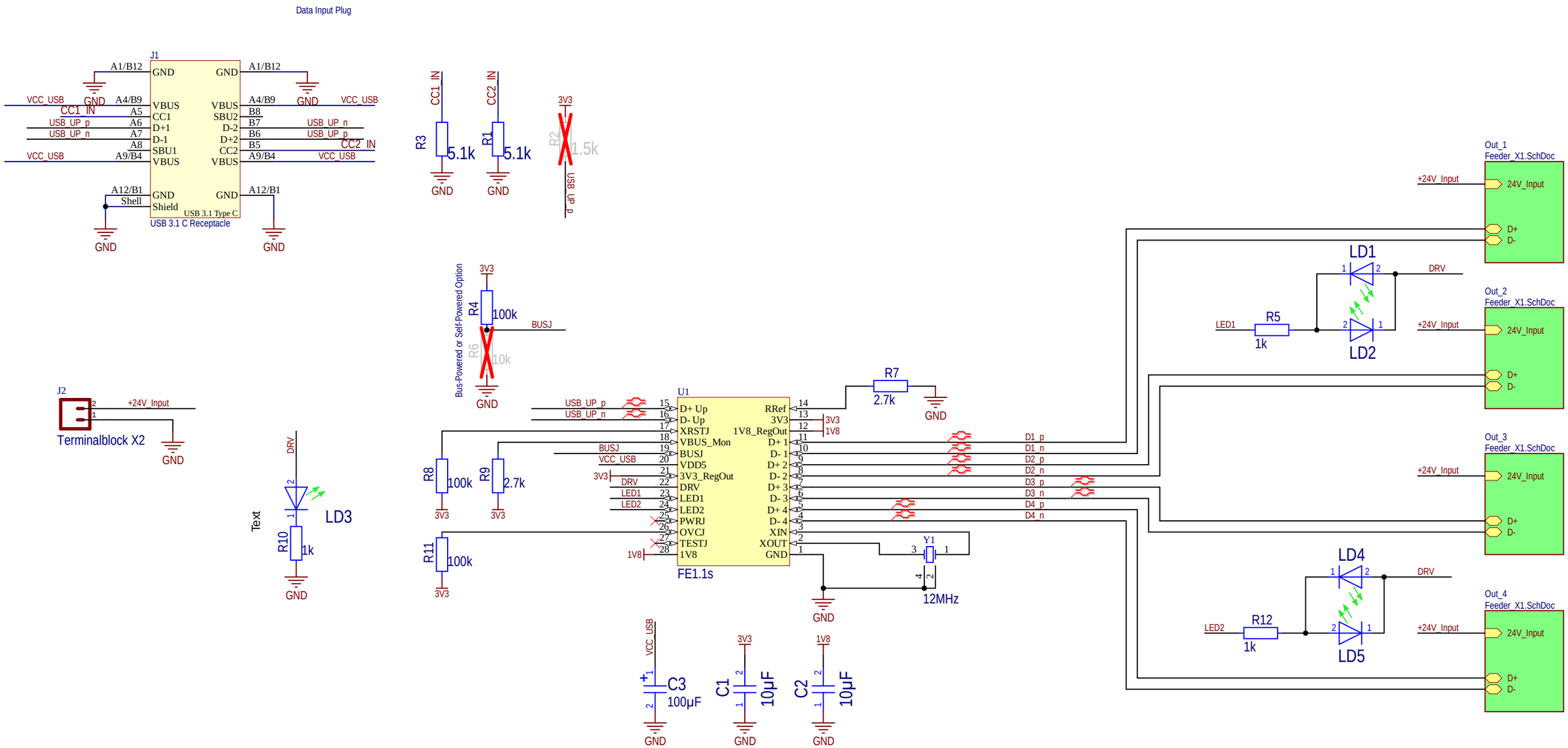

MP1 MP2 MP3 MP4 MP5 MP6

Marker IPC7351

open source hardware

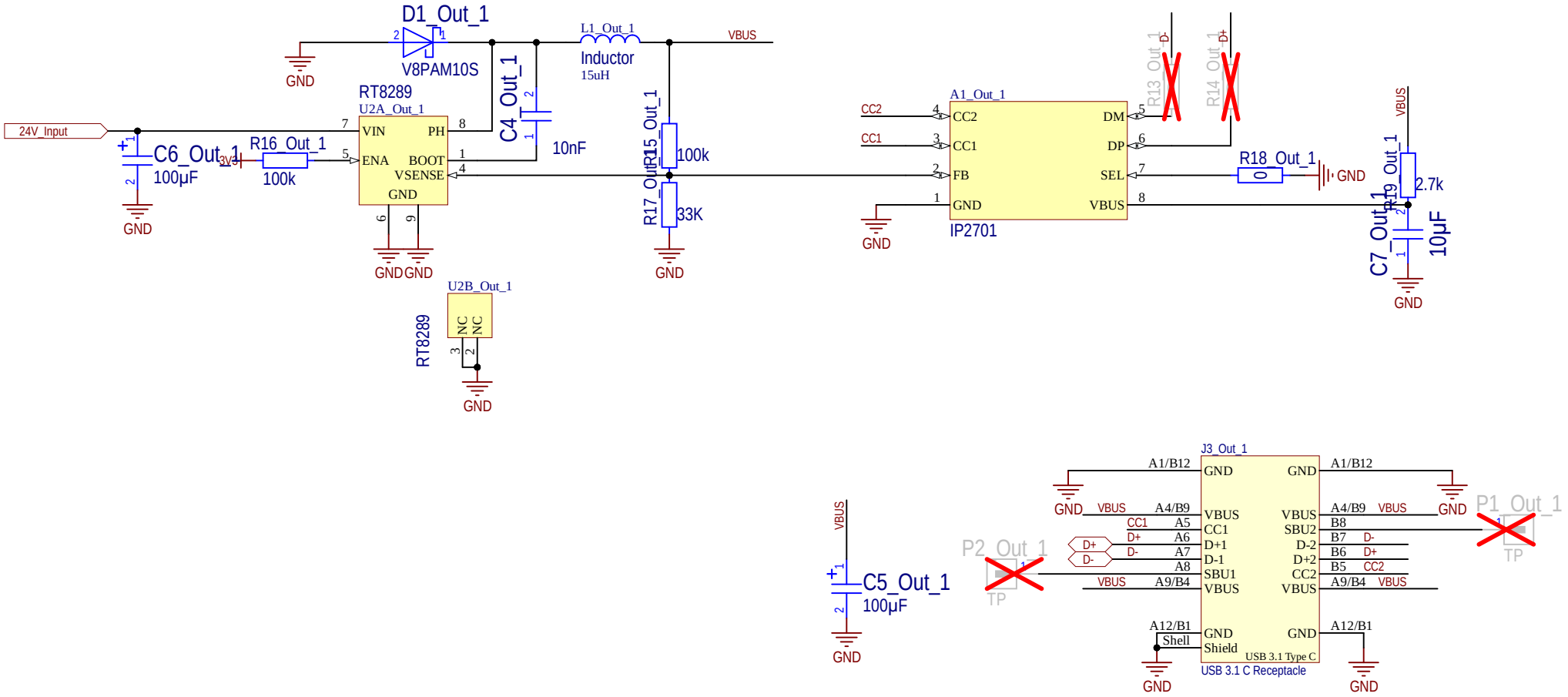

open source hardware

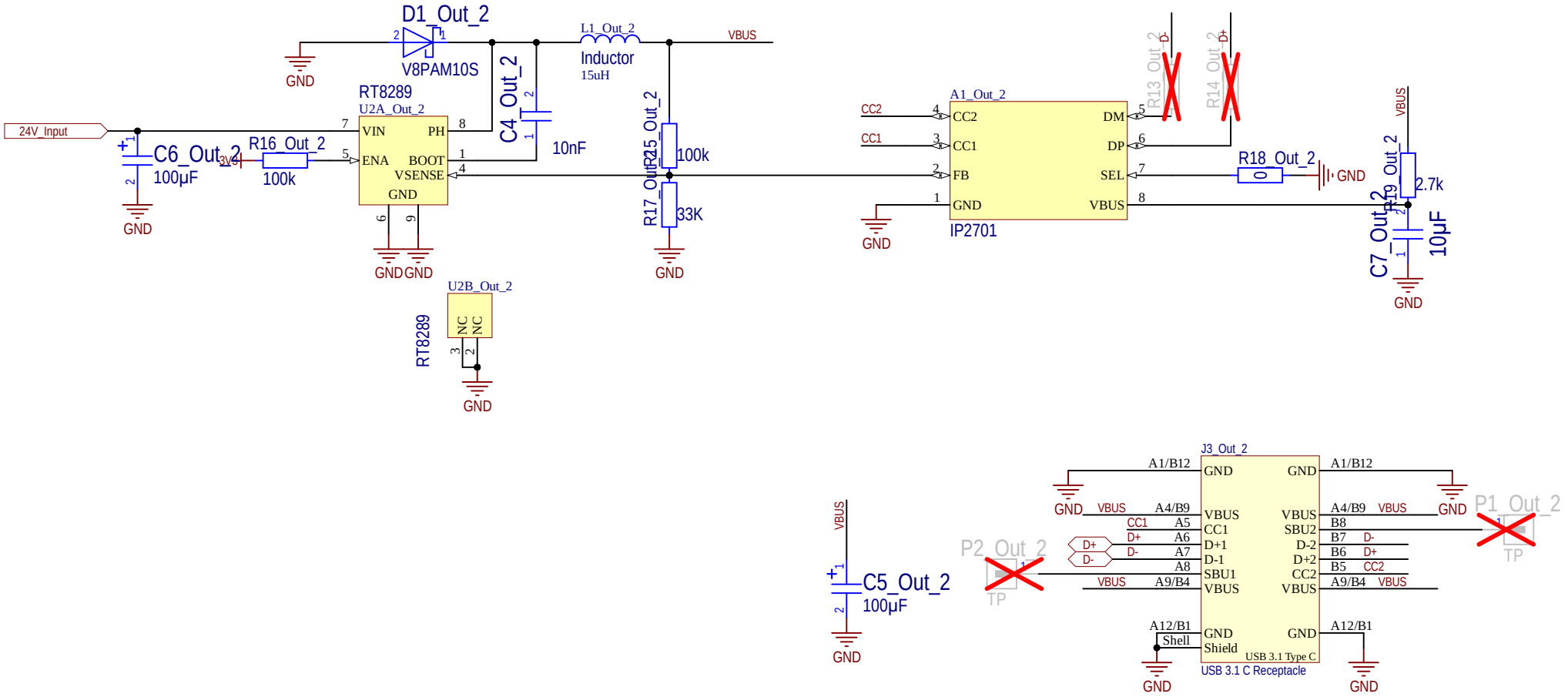

open source hardware

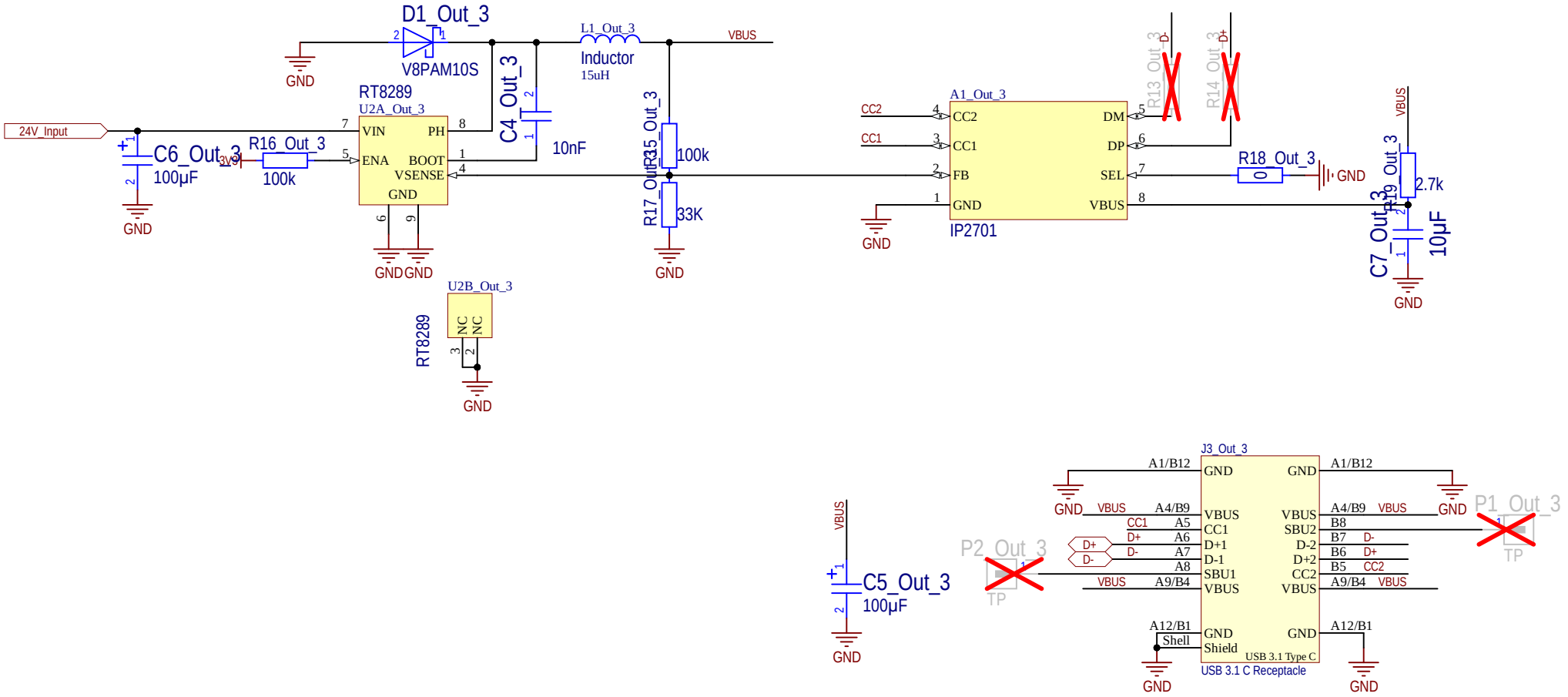

open source hardware

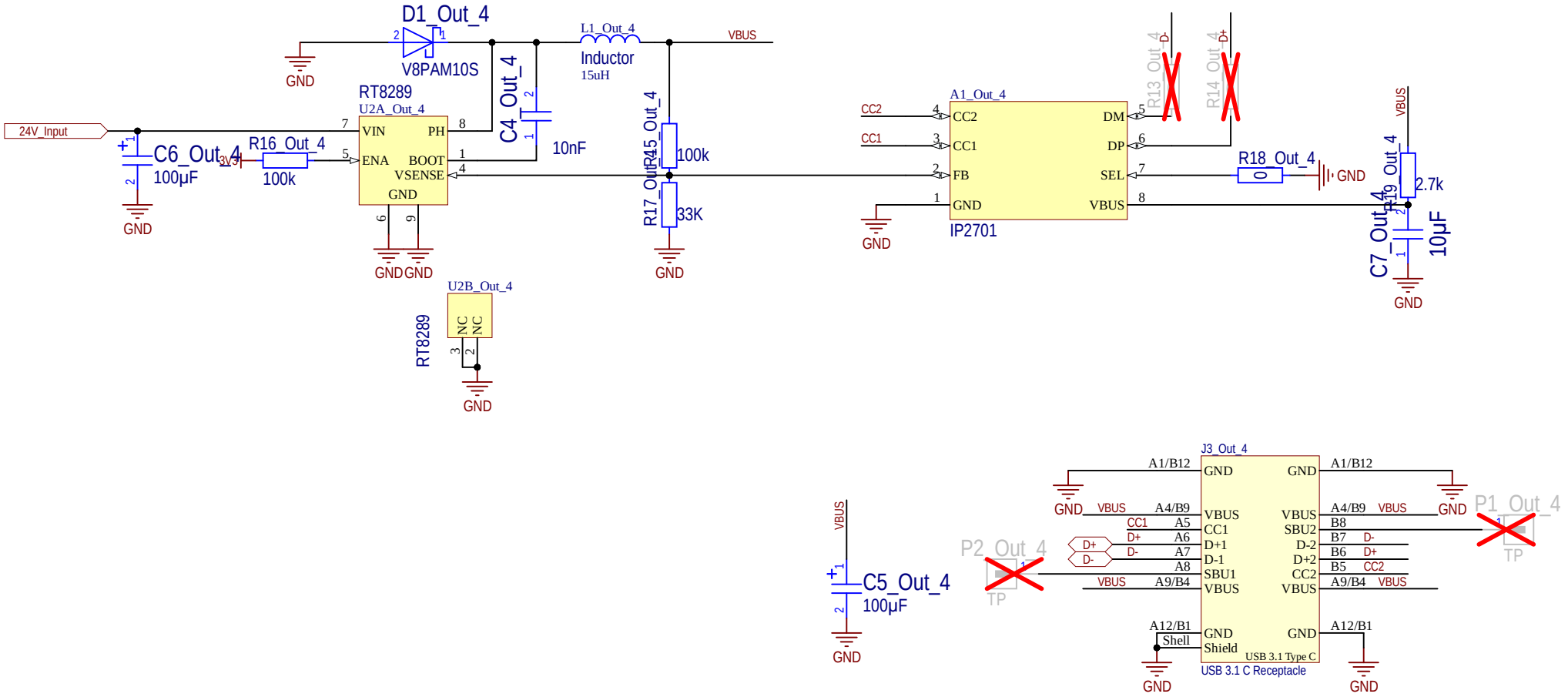

open source hardware