Engineering Portfolio

Caden Kuang

I am a student at Purdue University majoring in Industrial Engineering. I previously completed a seven-month Co-op at Belden as a Manufacturing Engineering. During my professional experience and my time in college of Engineering, I have worked with cross-functional teams such as composites, electrical, and mechanical engineers. I have facilitated communication across technical teams and contributed to problem solving in complex engineering environments.

This portfolio presents a selection of my projects that demonstrate my engineering, analytical, and collaborative experience.

Robotics and AI Simulation Software

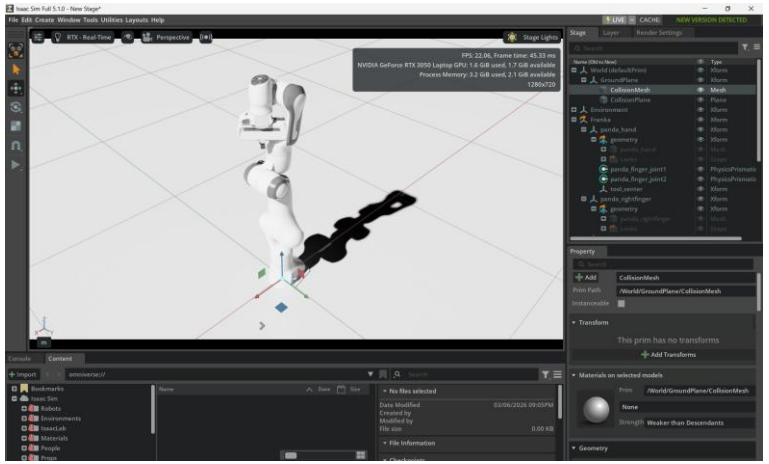

Isaac Sim

- Create a digital twin of manufacture floor
- Utilizing AI to simulate physical environment
- Simulated robot physics to identify and resolve issues to ensuring realistic interactions

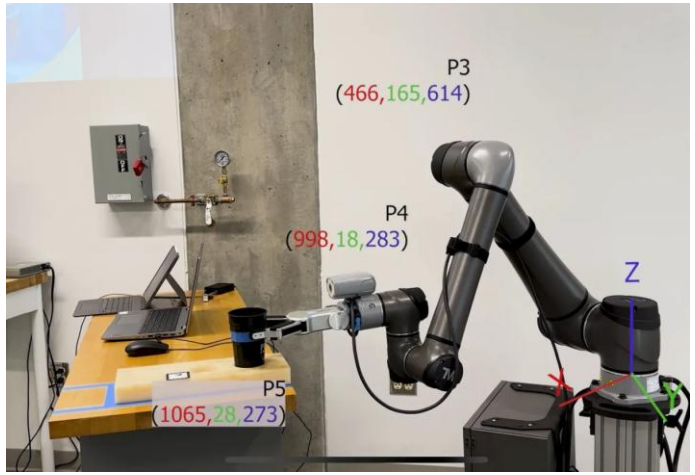

Coppelia Sim

- Using data and algorithms to simulate working environment
- Pick and sort objects utilizing camera vision

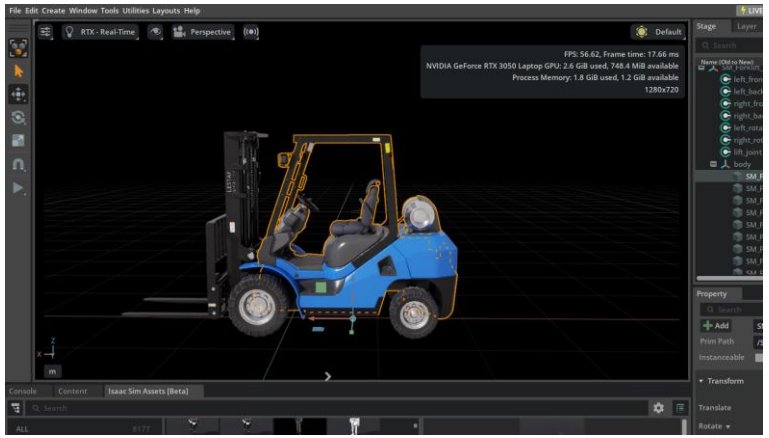

Fetch Core

- Program path for robots to be used in real environment
- Generate work orders to ensure all robots work cohesively

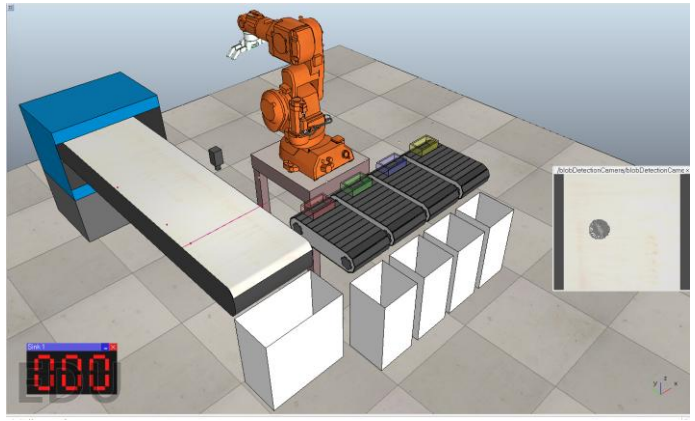

Industrial Robotics & Flexible Assembly

Goal: Developed technical knowledge in industrial robotics integration within flexible manufacturing systems, focusing on motion control, perception systems, and intelligent automation to improve efficiency, accuracy, and adaptability.

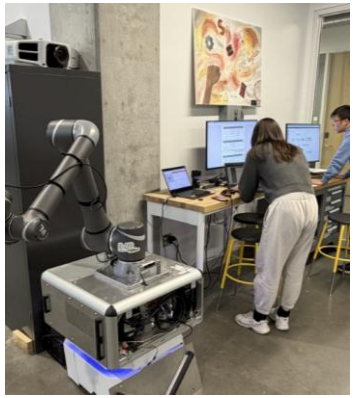

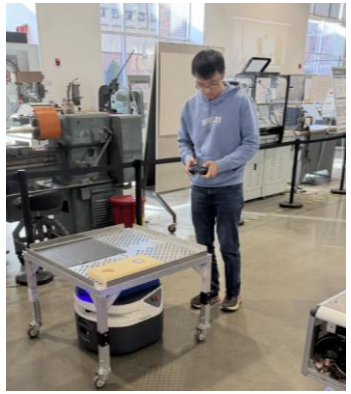

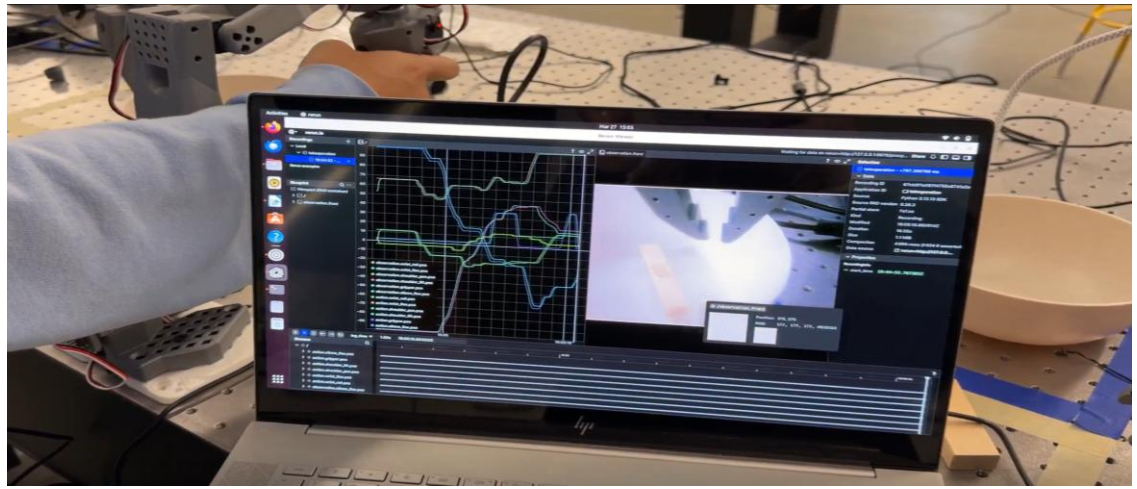

- Path Planning: Generated collision-free robot trajectories using motion optimization.
- Machine Vision: Applied image processing for object detection, positioning, and inspection automation.
- Artificial Intelligence (AI): Created data-driven models to optimize robotic workflows and robotic coordination.
- Deep learning in industrial robotics: Applied CNN-based models for automated visual inspection and repositioning of robotic systems

Software | Tools: Python, Fetchcore, NodeRed, Matlab, TM Flow

Design & Development of a Fiber Cable Submersion Device

Goal: Design and manufacture a device capable of securely submerging fiber cable underwater to ensure protection and reliability.

- **Scalable Production:** The design must be straightforward to manufacture efficiently at larger volumes.
- **Operator Usability:** The device must allow operators to install and remove it with minimal effort and without specialized tools.
- **Material Integrity:** All materials must withstand prolonged underwater exposure without rusting, corroding, or degrading.

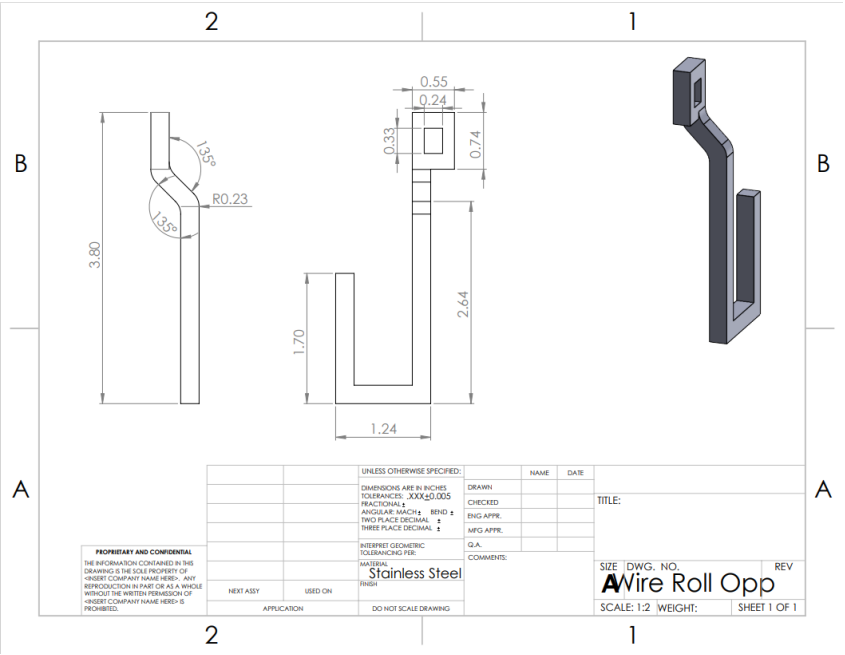

Above: Over 200+ parts were manufactured to placed on assembly line

Above: SolidWorks Drawing of design given to subtractor to manufacture my design

Left: Fiber Cable Submerge Device being used in fiber extrusion assembly line

Improving Fiber Cable Polishing Consistency Through Pad Optimization

Goal: Apply Six Sigma methodology to identify and implement a solution for inconsistent fiber cable end polishing.

- Operators were spending multiple times to polish fiber cable ends
- Quality analysis revealed that some cables had incompletely polished ends

Observation:

- Watched operators and analyzed their workflow.
- Recorded data on fiber cables with unfinished ends.

Problem Identification:

- Polishing pucks were collecting dust, causing inconsistent polishing.

Design & Implementation:

- Designed and built a storage device to keep polishing pucks clean.
- Created a standardized work procedure for operators.

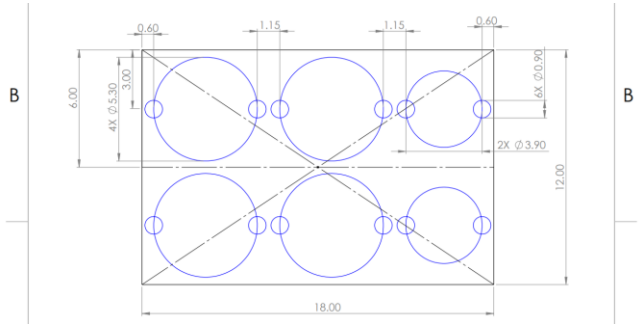

Drawing of the Storage device with SolidWorks

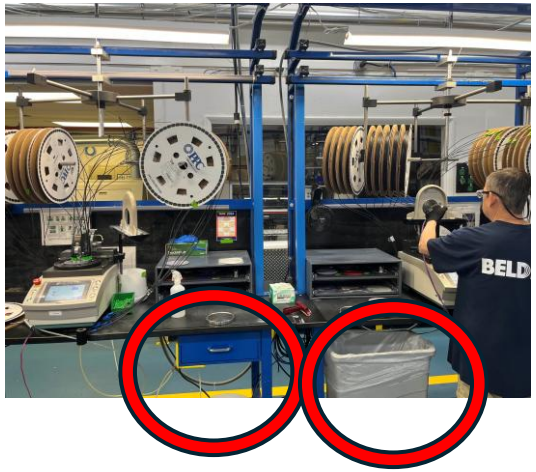

Polishing Storage device being using during operation hours

Software Used: SolidWorks | **Skills:** Six Sigma, Workflow Analysis, Process Improvement, Layout Optimization

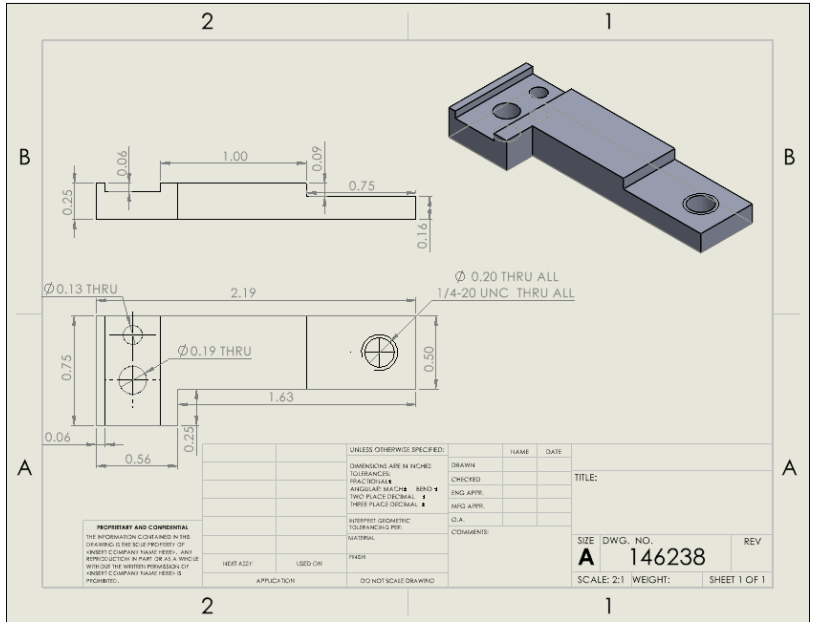

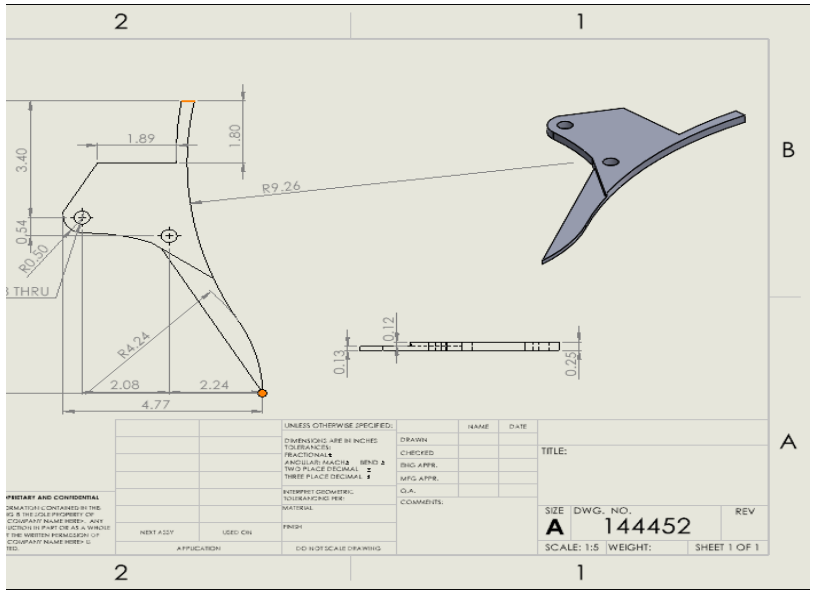

Reverse Engineering

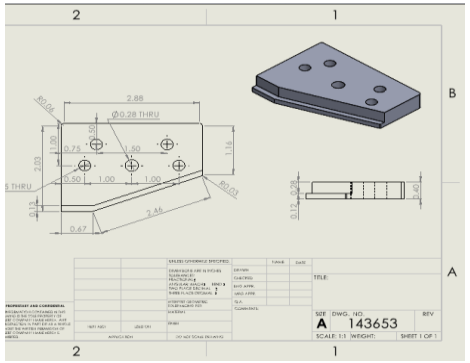

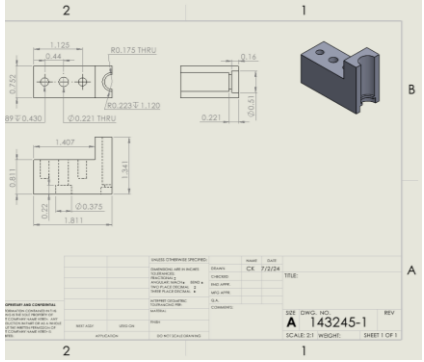

Software Used: SolidWorks | **Skills:** Reverse Engineering, CAD Modeling, Part Modeling for Manufacturing

Time Study on Nozzle Assembly – Driving Productivity & Efficiency

							270	CURENT SAP RATE				#DIV/0!	#DIV/0!	#DIV/0!	
							#DIV/0!	TIME STUDY RATE	#DIV/0!	#DIV/0!					
MAI OP	Element	Parts	Total Sec	Sec/Part	Avg Sec	Rate	Avg Rate	Description	Operators	MINS/HR Busy	MINS/HR	Operators	MINS/HR Busy	% Busy	% Free
10	1	120	630.00	5.2500	3.58	686	#DIV/0!	HAI 14935-01 HFOC Nozzle Assembly	#DIV/0!	#DIV/0!	#DIV/0!	#DIV/0!	#DIV/0!	#DIV/0!	#DIV/0!
		120	659.00	5.4917		656									
		10		0.0000		#DIV/0!									

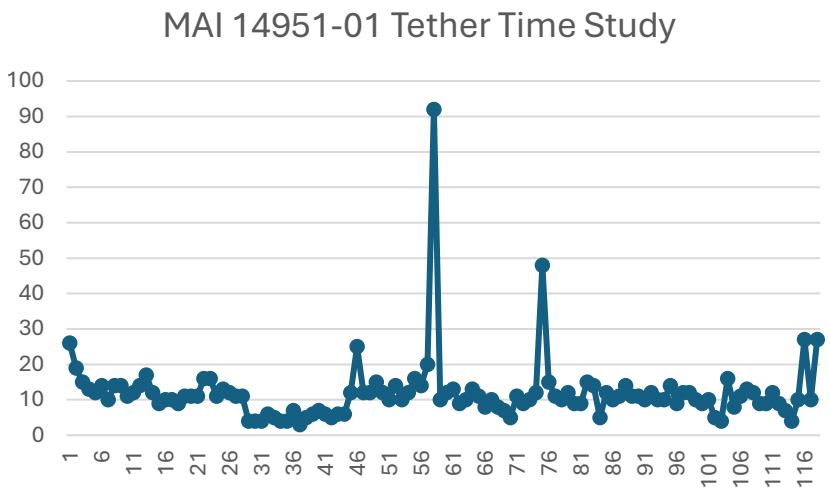

Goal: Systematically analyze and optimize the time it takes for a worker to complete a Nozzle Assembly.

Findings

- Average time assembly for each part
- Movement analysis of worker
- Feedback from workers for better ergonomics

Key Benefits for the Company

- **Productivity** – Balanced workloads, reduced bottlenecks
- **Cost Savings –** Less wasted time, lower labor costs
- **Ergonomics –** Improved worker comfort and safety
- **Data-Driven –** Benchmarks for staffing & scheduling

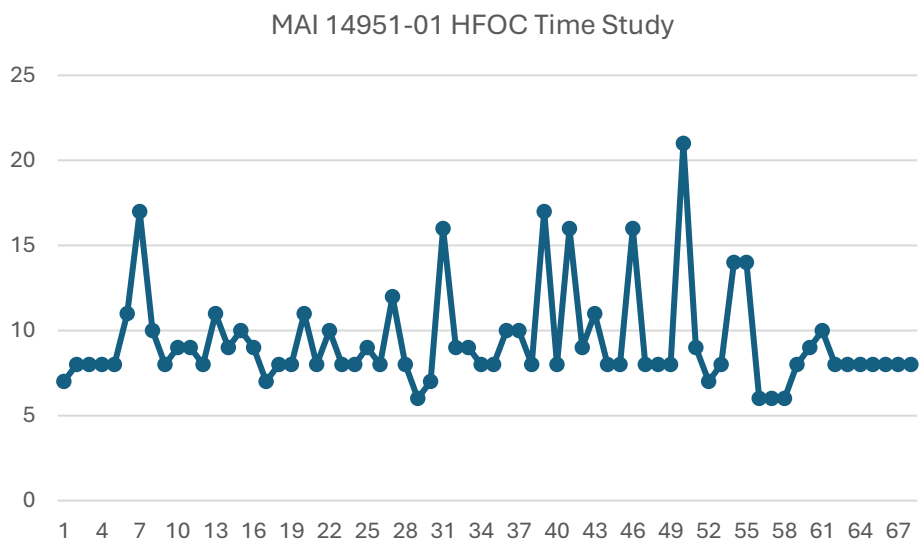

Software Used: Excel | **Skills:** Time Study, Data Analysis, Workflow Observation, Process Improvement

Plant and Electrical Layouts – Using AutoCAD for Smarter Manufacturing

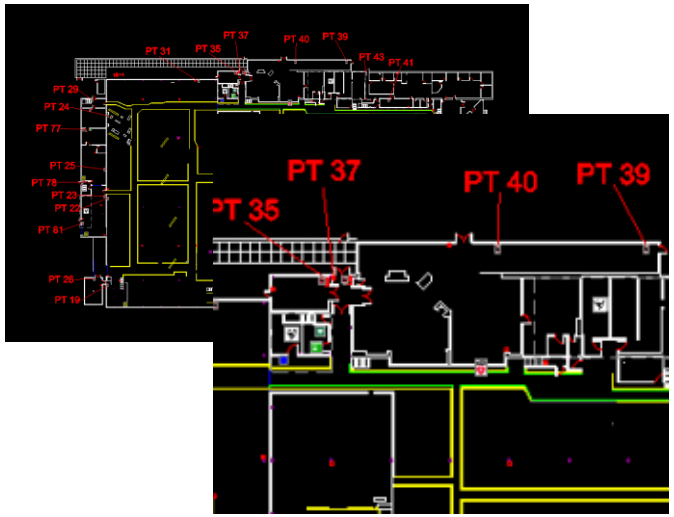

Safety Plant Layout

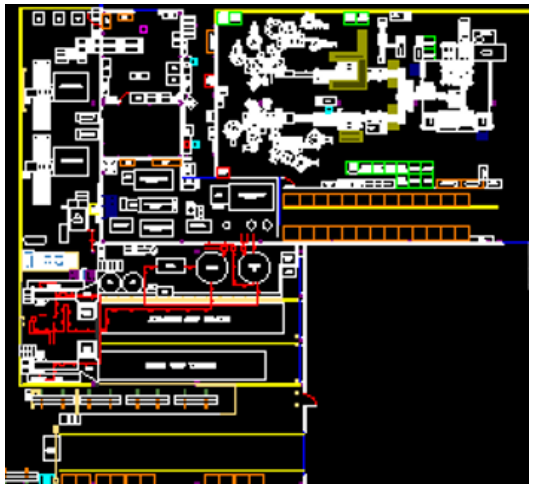

Molly Plant Layout

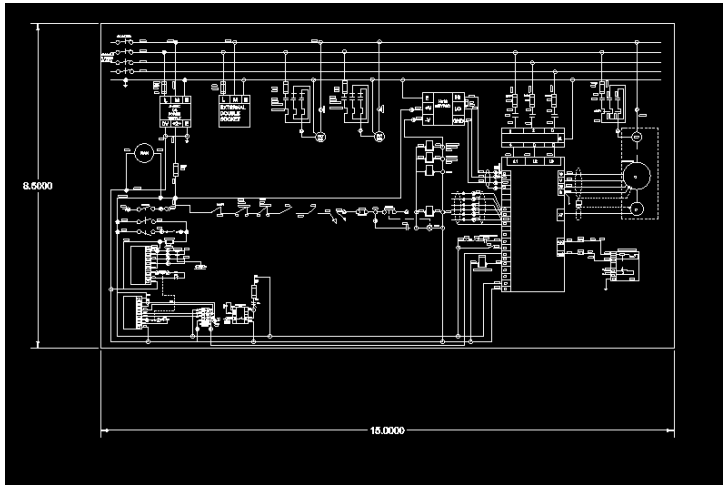

Electrical Layout

What I Did

- Revised and improved Safety Plant Layout, Molly Plant Layout, and Designed Electrical Layout in AutoCAD
- Updated layouts to reflect new machines and ergonomic improvements
- Ensured the accuracy and consistency of documentation across all relevant areas

Why It's Important

- **Safety** – Proper layout reduces hazards and ensures compliance
- **Efficiency** – Streamlined flow of people, equipment, and materials
- **Ergonomics** – Worker-friendly design reduces fatigue/injury risk
- **Communication** – Clear layouts keep engineers, operators, and managers aligned

Software Used: AutoCAD | Skills: CAD Design, Layout Optimization, Ergonomics, Process Improvement

Purdue Solar Racing

Create a World Class Solar Vehicle for competition

My Contributions

- Mechanical Steering Lead: lead team members to design a new steering system
- Designing and modeling for interior components
- Maintaining and fixing Mechanical components

Above: Testing out diver interface with steering wheel and door handles

Above: Fixing the solar car to comply with race regulation

Below: Creating new hardpoints to mount door latches for aeroshell

Right : Electrek Formula Sun Grand Prix 2025 – ASC & FSGP Team

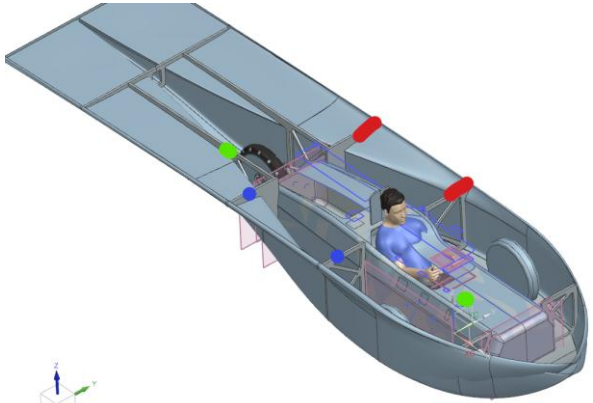

Designed using Siemens NX

Front Latch Design

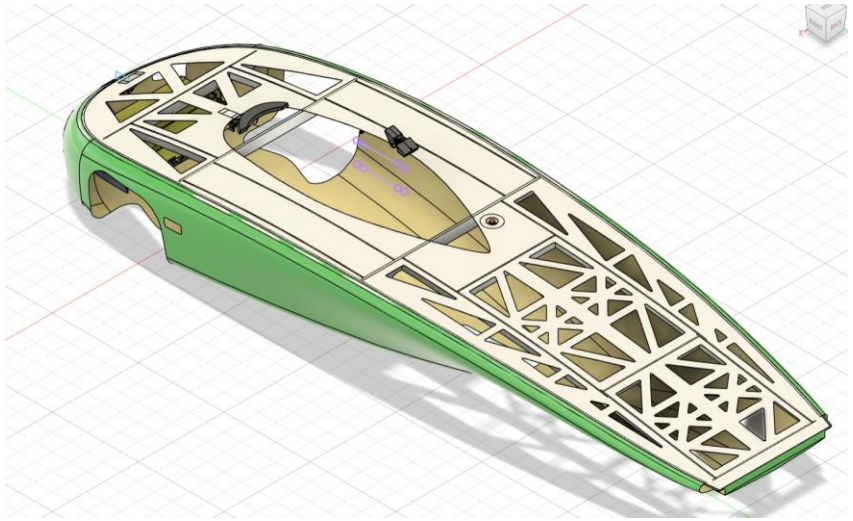

<u>Top Aeroshell Canopy</u>
Front Latch ensures that the top aeroshell canopy does not open while solar car is moving; testing showed that without the front latch design, the entire canopy will lift. This design ensure that driver can conformably operate the front latch without leaving the driver seat while securing the canopy.

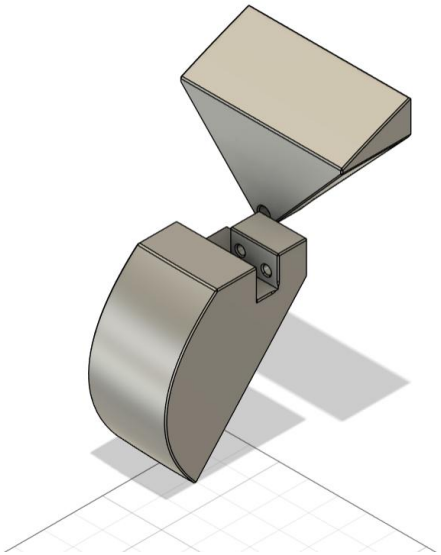

Front Latch Design with bear claw latches mounts

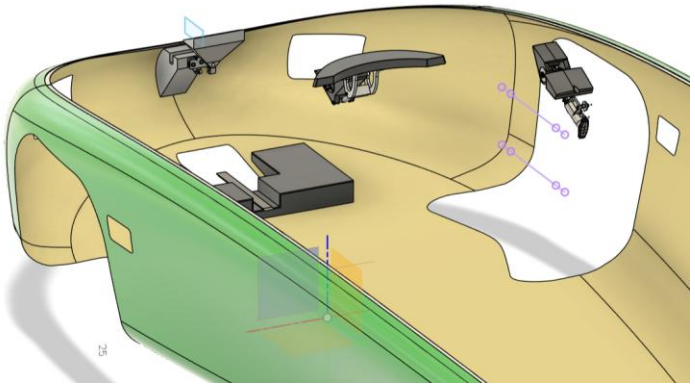

Mounting area where front latch will be placed in aeroshell

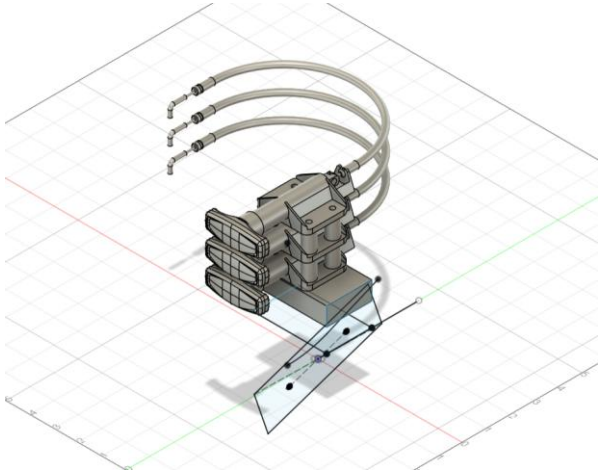

Bear claw latches driver uses to open the top aeroshell canopy

Altair's Solar Car Challenge 2025

- **Selected Among 18 Elite University Teams**
  Competed in a prestigious challenge focused on innovative solar car engineering.

- **Designed a Lightweight & Durable Roll Cage**
  Utilized Altair Inspire to engineer a high-performance roll cage optimized for strength and minimal weight.

- **Winner: Judges' Choice Award**
  Recognized for the Lightest Weight Design — demonstrating advanced efficiency and structural integrity

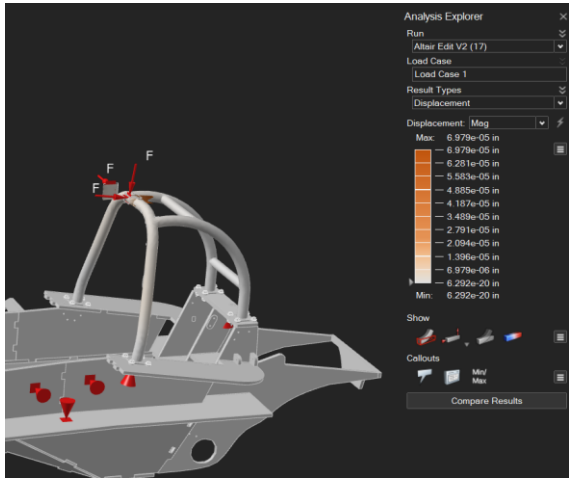

Altair Inspire to design roll cage

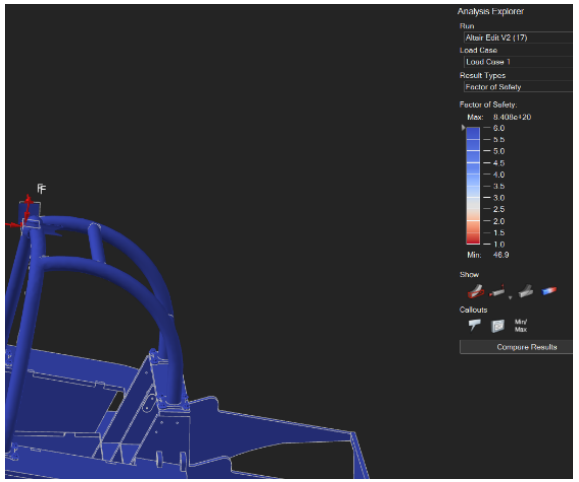

Holding award next to our solar car (Apollo)

Receiving Judges' Choice Award

Vertical Flight Systems: GoAreo

Create an Autonomy-Enabled Emergency Response Flyer

My Contributions:

- **Manufacturing Co-Lead :** Led the design and fabrication of structural components, including motor mounts and carbon fiber stands
- **Team Development:** Guided new members on CAD modeling, assembly techniques, and project workflows to accelerate hands-on learning.
- **Resource Management:** Sourced and organized materials, parts, and tools required for project development.

Above: Iteration V1 of Drone design

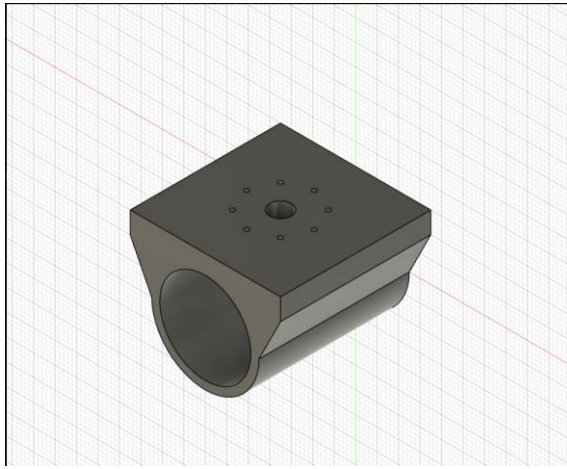

Above: Drone Motor mount

Left : Final Concept Design

Motor Mount Design

My Contribution

- Designed and modeled custom motor mounts in SolidWorks.
- Improved structural integrity by securing motors to carbon fiber arms.
- Integrated access holes for the electrical team to route battery wiring and components.

- **Problem Identified:** Directly mounting motors to carbon fiber arms caused stability and wiring issues.

- **Solution Developed:** Securely attach motors to arms while providing access holes for wiring.

Motor Mount Inner

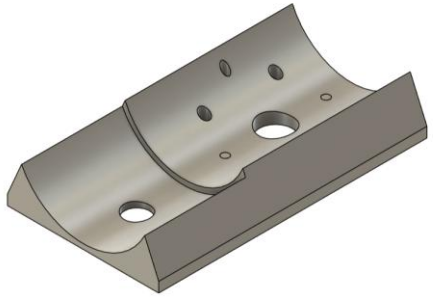

Motor Mount Outer

Above: Drone Iteration V1 being made

Left: Small 3D project new members make during on-boarding