Power Supply

File: control_brd_ps.kicad_sch

MCU

File: control_brd_mcu.kicad_sch

Bus Devices

File: control_brd_buses.kicad_sch

Level Shifters

File: control_brd_lvl_shift.kicad_sch

Luka Culic Viskota

Sheet: /
File: ControlBoard.kicad_sch

Title: IonGlow

Size: A4	Date: 09/10/2019	**Rev:**
KiCad E.D.A. kicad 7.0.7		Id: 1/5

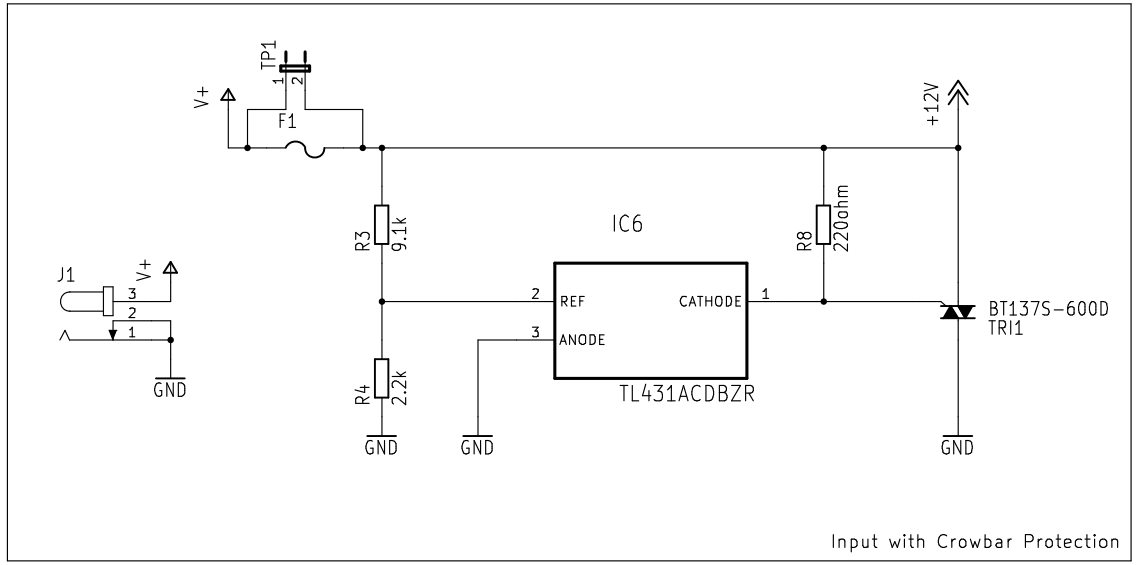

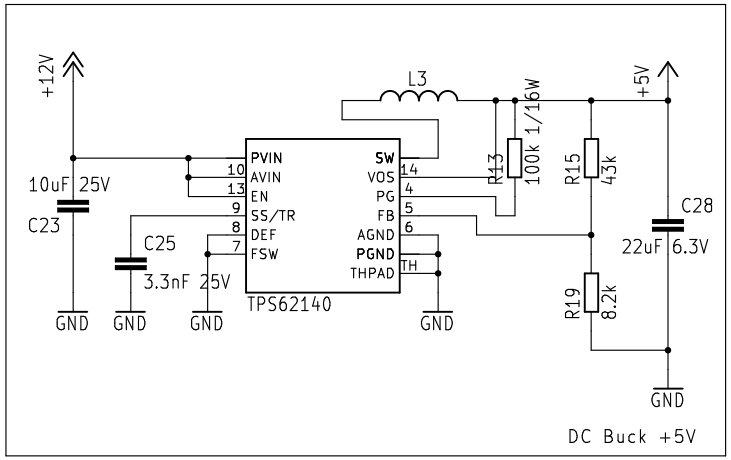

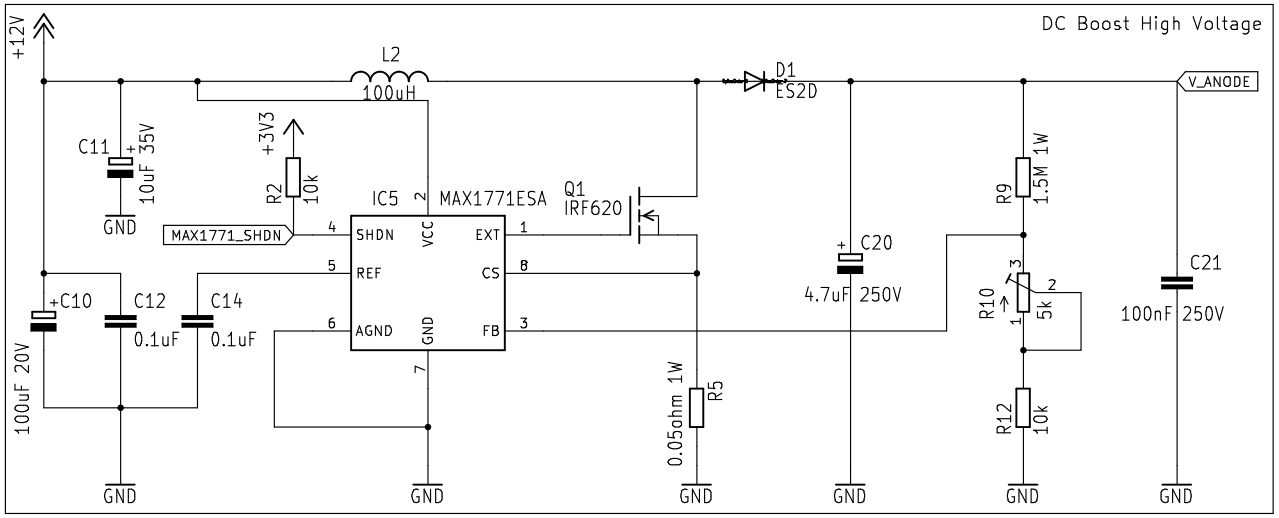

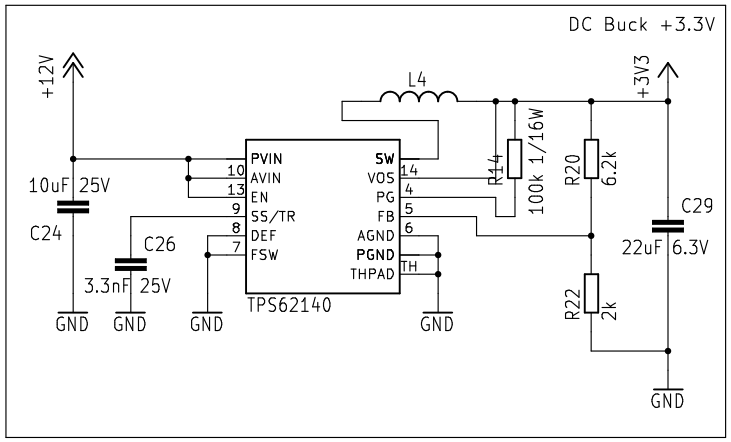

Luka Culic Viskota

Sheet: /Power Supply/

File: control_brd_ps.kicad_sch

Title: IonGlow – Power Supply

Size: A4	Date: 09/10/2019	**Rev:**
KiCad E.D.A. kicad 7.0.7		Id: 2/5

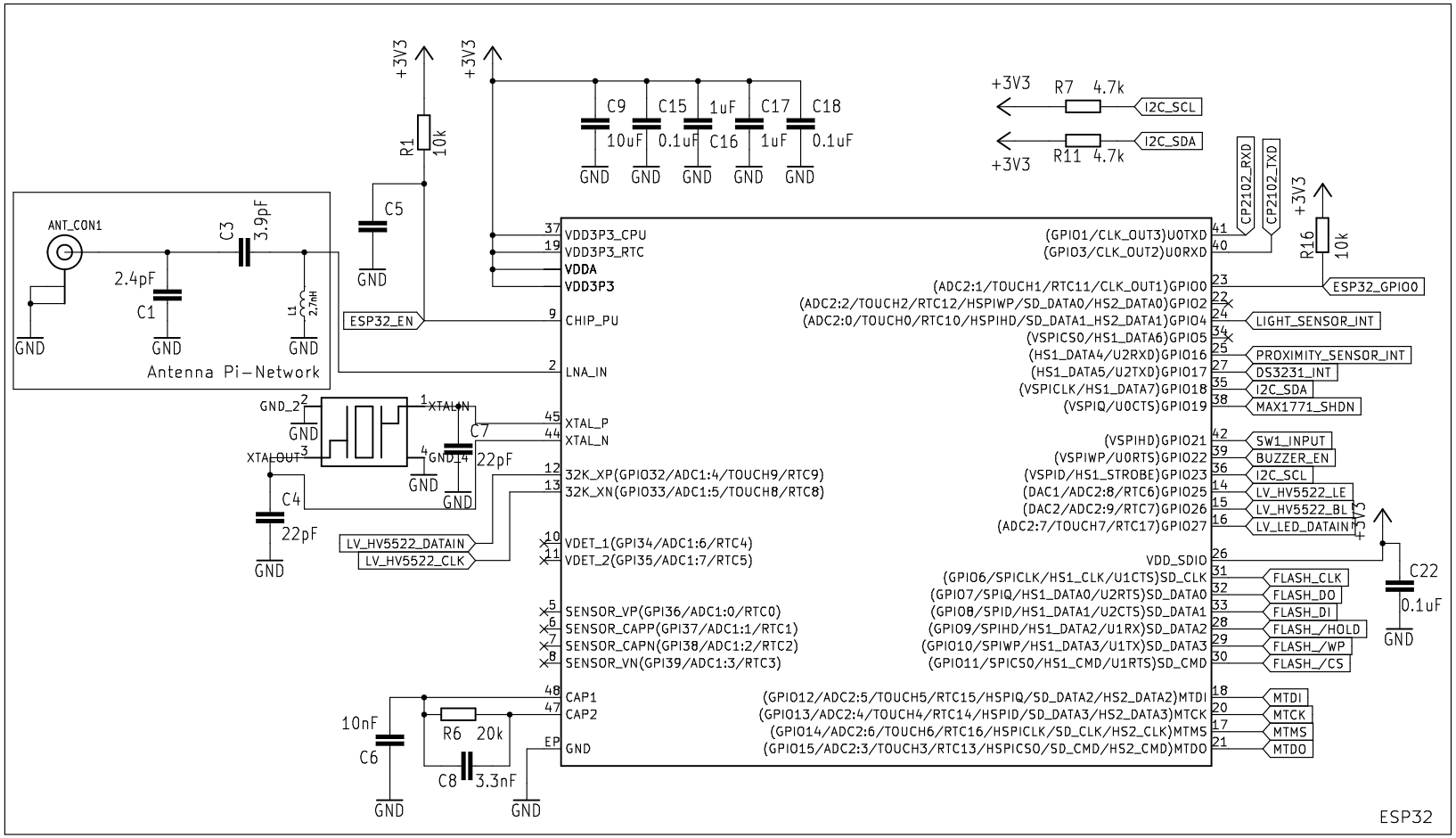

Luka Culic Viskota

Sheet: /MCU/

File: control_brd_mcu.kicad_sch

Title: IonGlow – MCU

Size: A4	Date: 09/10/2019	**Rev:**
KiCad E.D.A. kicad 7.0.7		Id: 3/5

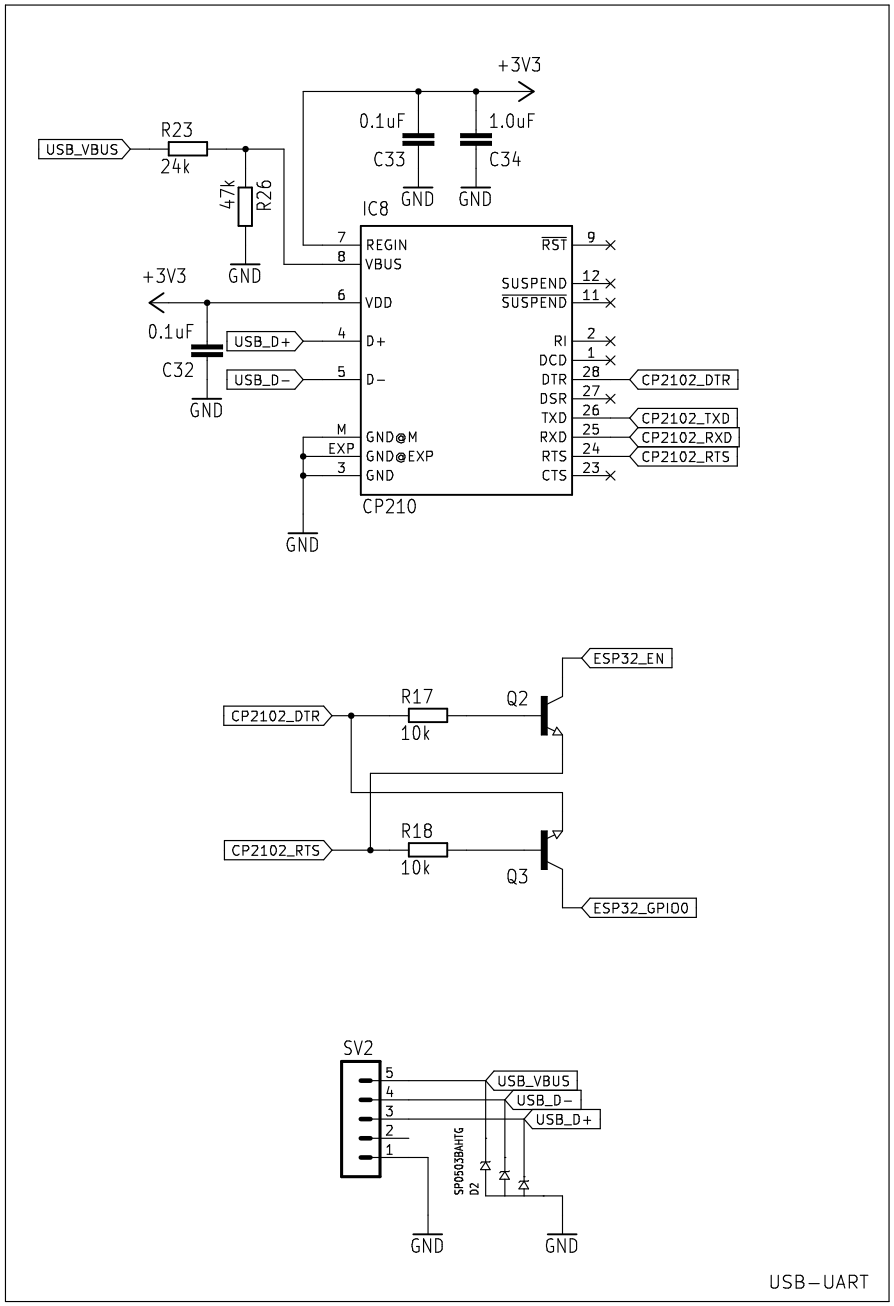

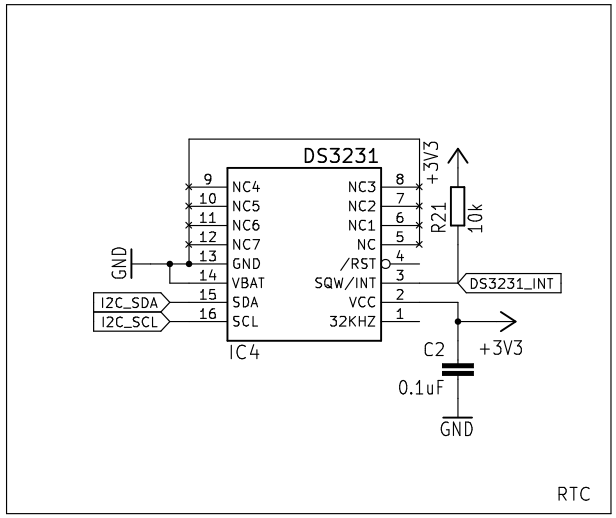

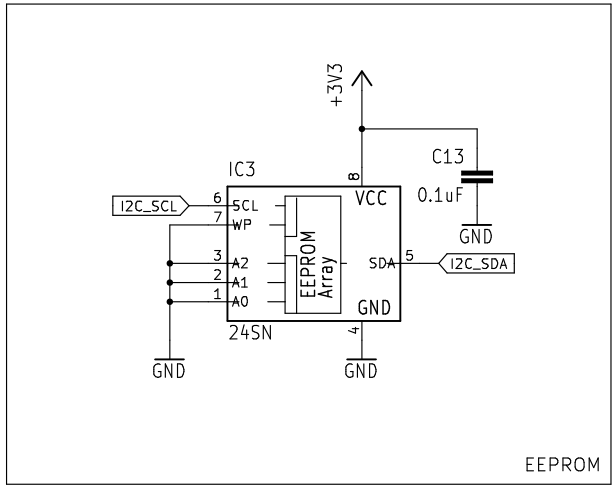

Luka Culic Viskota

Sheet: /Bus Devices/

File: control_brd_buses.kicad_sch

Title: IonGlow – Bus Devices

Size: A4	Date: 09/10/2019	**Rev:**
KiCad E.D.A. kicad 7.0.7		Id: 4/5

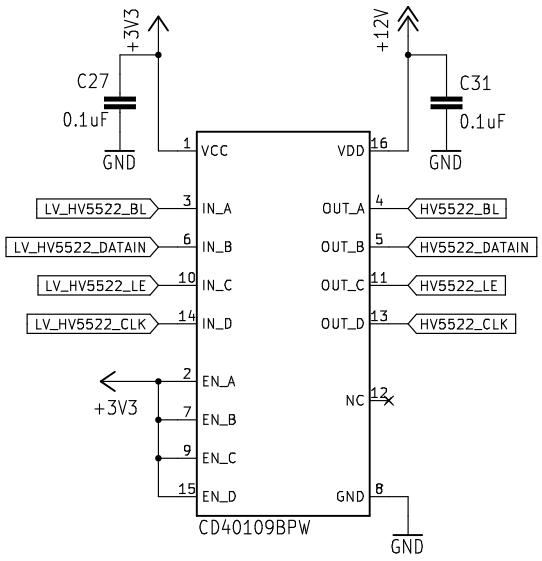

Level Shifter 3.3V -> 12V

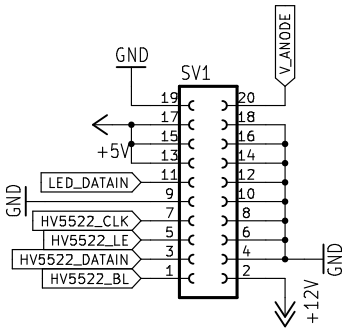

Connector to Display Tube Board

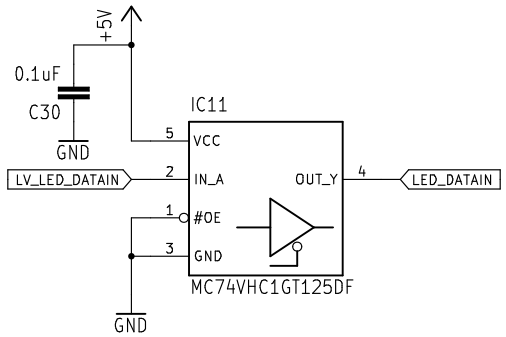

Level Shifter 3.3V -> 5V

Luka Culic Viskota

Sheet: /Level Shifters/
File: control_brd_lvl_shift.kicad_sch

Title: IonGlow – Level Shifters

Size: A4	Date: 09/10/2019	**Rev:**
KiCad E.D.A. kicad 7.0.7		Id: 5/5