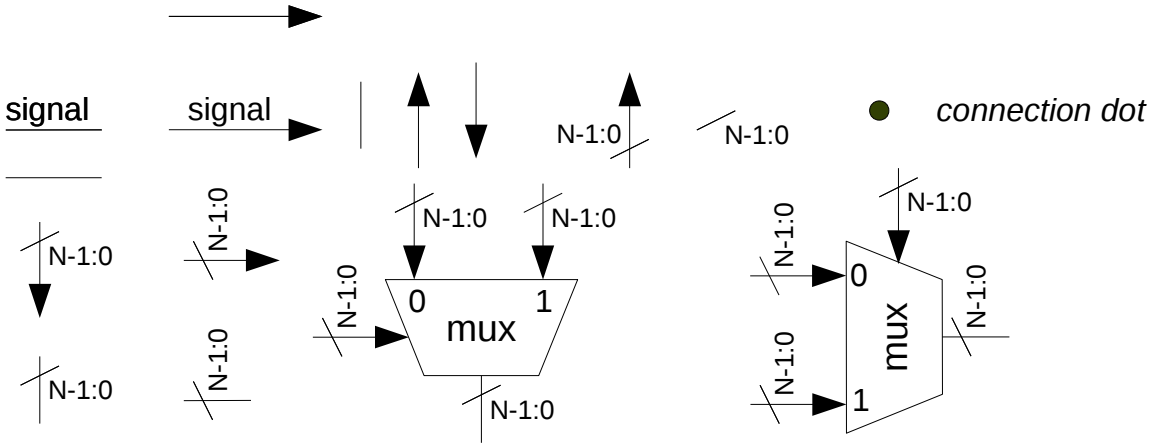

connection dot

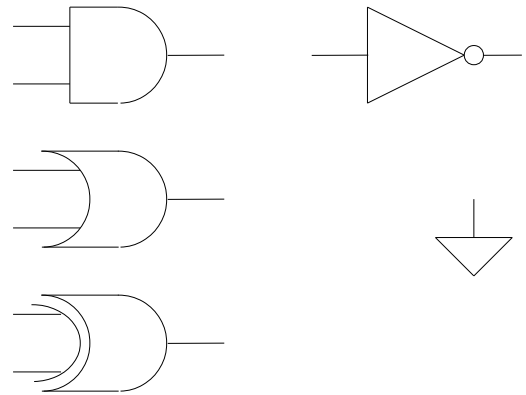

inversion bubble

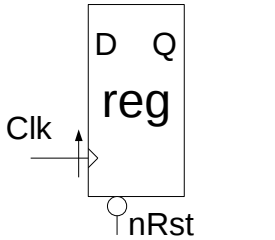

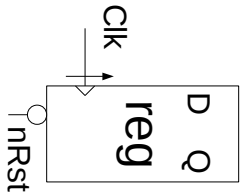

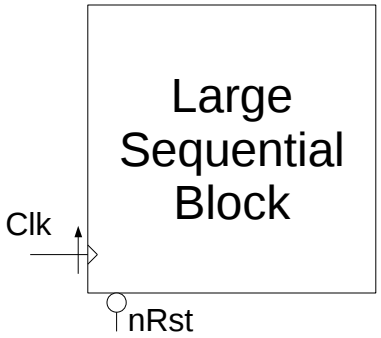

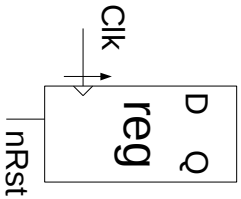

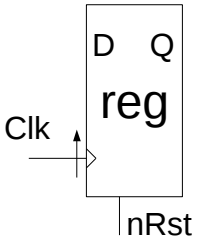

symbols for state tranisition diagrams

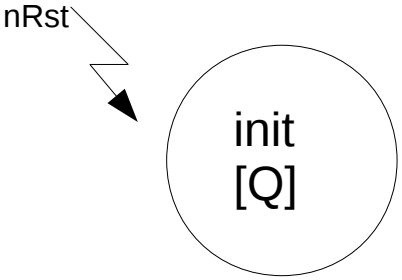

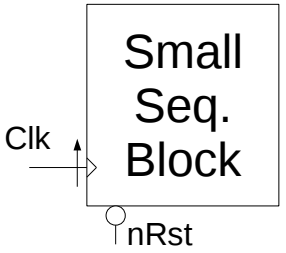

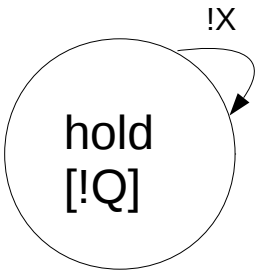

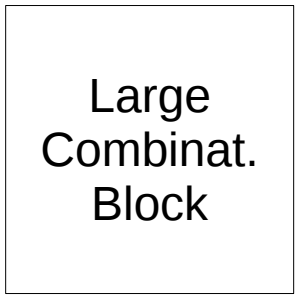

generic FSM block diagram

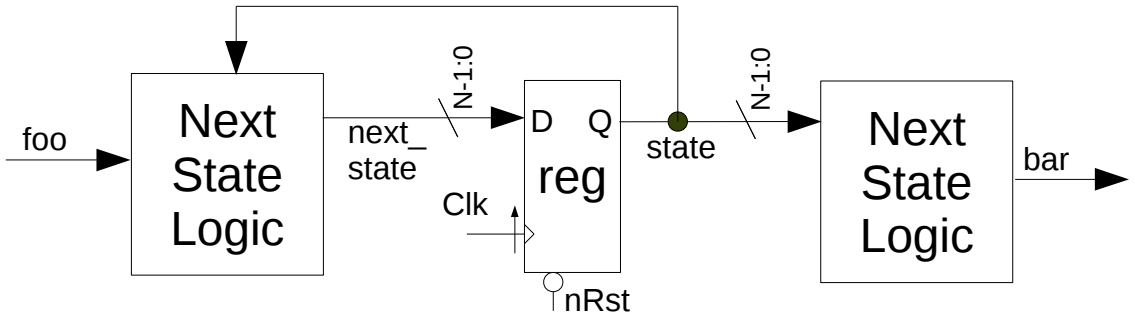

generic counter or clock divider block diagram

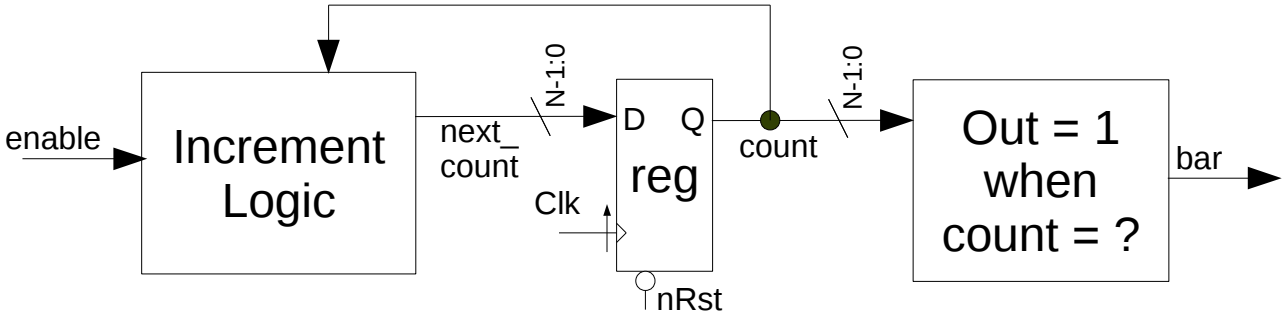

synchronizer

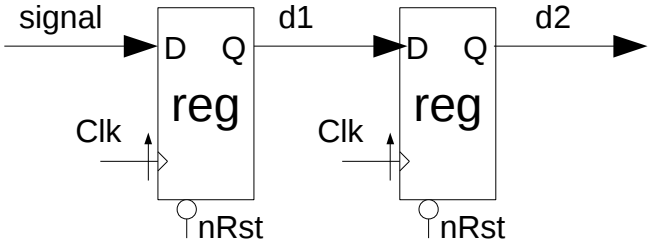

edge detector

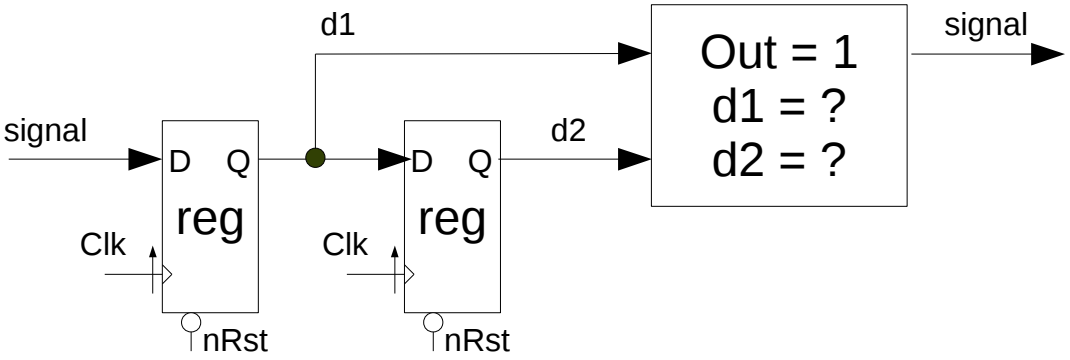

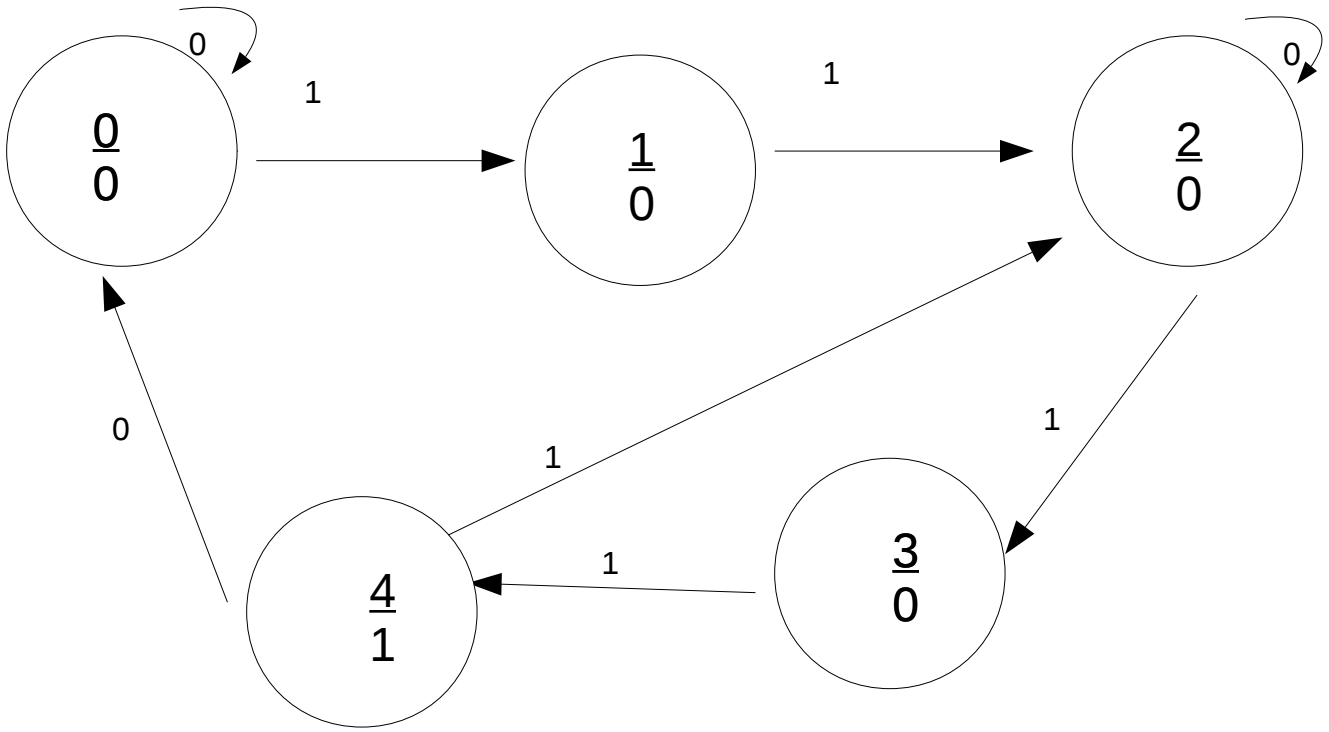
0
0
1
1
0
1
0
2
0
0
1
1
3
0
1
4
1