SH 1 DWG NO. 000-020-900

REVISIONS				
REV	DESCRIPTION	CHANGED BY	APPROVED BY	DATE
A	ECO 3220	ECK	CEO	2017-03-22
B	ECO 3366	CEO	CRA	2017-07-25

NOTES:

1. THE PURPOSE OF THIS DRAWING IS TO SUPPLY REFERENCE DIMENSIONS OF THE VEHICLE'S PAYLOAD INTERFACE AND JOINING ORTMAN GROOVE.

2. THE SHOWN HANDLE IS OPTIONAL WITH THE FLOODED PAYLOAD SECTIONS, SEE CONFIGURATION PNS BELOW:
   000-020-115-01 ASSEMBLY, PAYLOAD SECTION, FLOODED, SHORT, HANDLE
   000-020-115-02 ASSEMBLY, PAYLOAD SECTION, FLOODED, SHORT, NO HANDLE

3. ALL THREADED INSERTS ARE .112-40 UNC-2B ↧ .219 LOCATED ALONG THE PORT STARBOARD PLANE WITHIN THE TOP AND BOTTOM FAIRING RIBS AS SHOWN.

4. THE SHORT FLOODED PAYLOAD SECTIONS ARE MODULAR AND INTERCHANGABLE. FLOODED SECTIONS CAN BE USED INDEPENDENTLY BETWEEN THE TAIL SECTION AND THE PAYLOAD PRESSURE VESSEL OR MULTIPLE FLOODED SECTIONS CAN BE PUT IN SERIES.

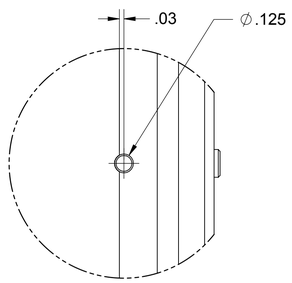

DETAIL D
TAIL SECTION
ALIGNMENT PIN
SCALE 2 : 1

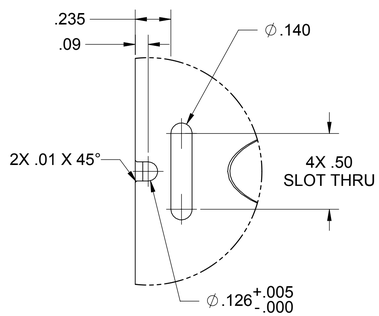

DETAIL C
ORTMAN INSERTS AND
ALIGNMENT FEATURE
SCALE 2 : 1

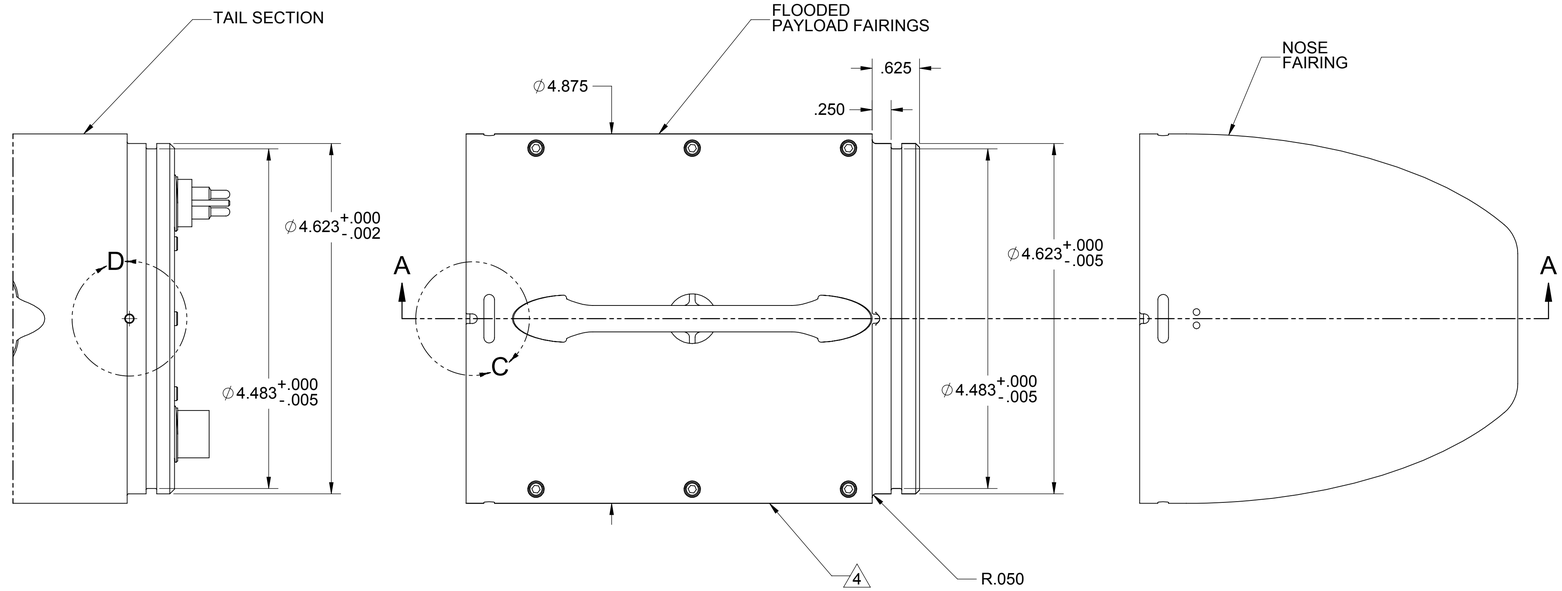

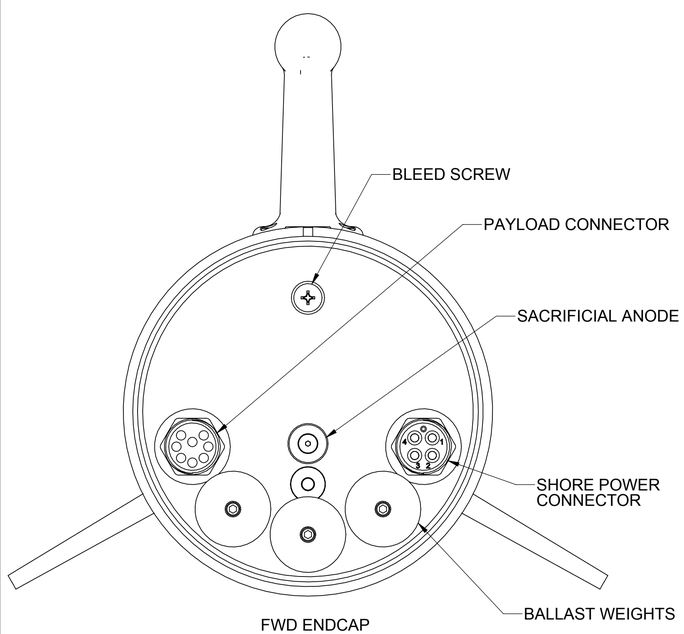

FWD ENDCAP

000-019-550-01 ASSEMBLY, MOTION AND CONTROL SECTION

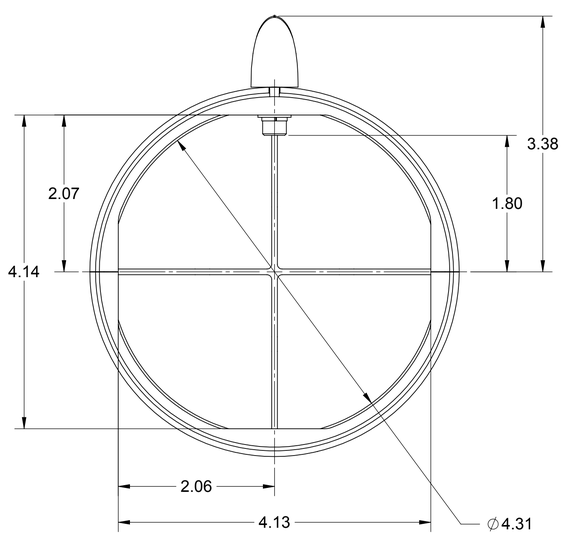

SECTION B-B

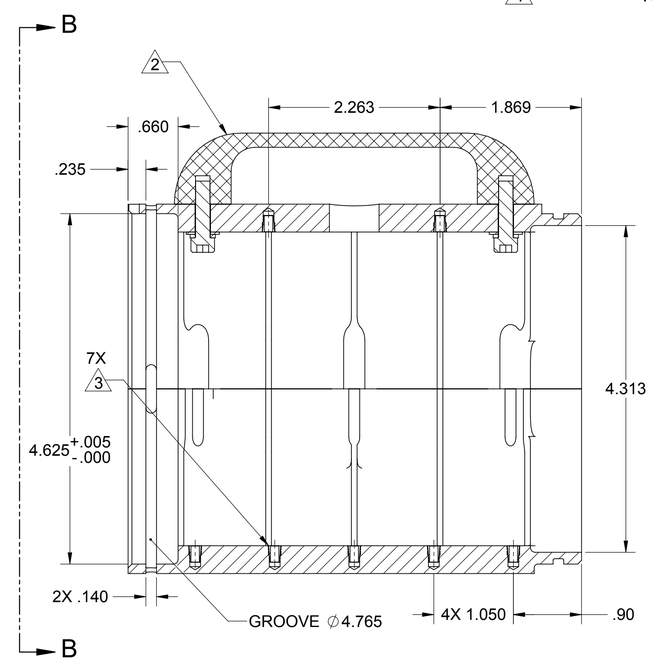

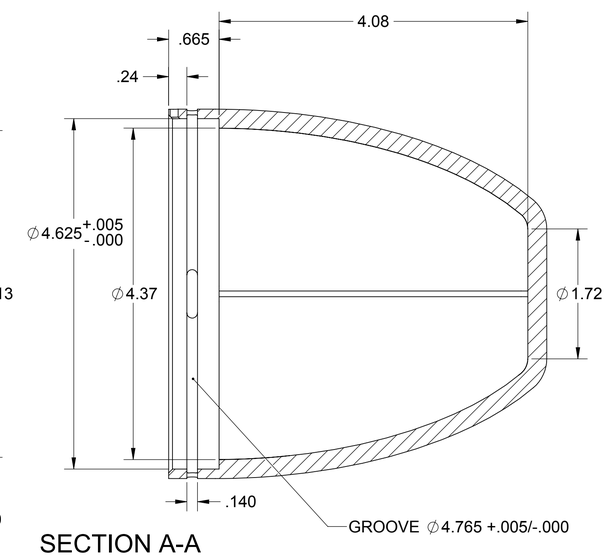

SECTION A-A

THIRD ANGLE PROJECTION

INTERPRET DIMENSIONS AND TOLERANCES PER ASME Y14.5 - 1994

PART NO. 000-020-900

UNLESS OTHERWISE SPECIFIED DIMENSIONS ARE IN INCHES [MM]

TOLERANCES

.X = ± .1 [3]
.XX = ± .01 [0.25]
.XXX = ± .005 [0.1]
ANGLES = ± 1/2°

DO NOT SCALE DRAWING

		DATE:
CHECKED BY:	CEO	16-10-18
DRAWN BY:	RDA	16-10-17
DESIGNED BY:	RDA	16-10-17

MATERIAL: N/A
FINISH: N/A
APPLICATION: SOLIDWORKS

BLUEFIN ROBOTICS

DWG TITLE
MECHANICAL ICD (MICD), PAYLOAD SECTION, SANDSHARK

SIZE	CAGE CODE	DWG NO.	REV
D	1LXF2	000-020-900	B

SCALE: 1:1 WEIGHT: 0.97 LBS SHEET 1 OF 1

©2017 GENERAL DYNAMICS