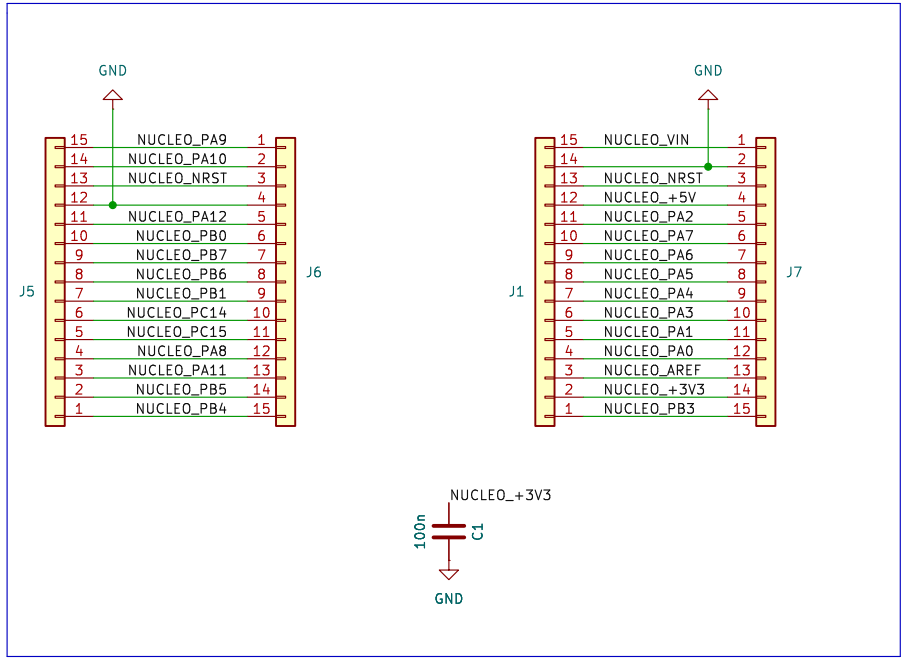

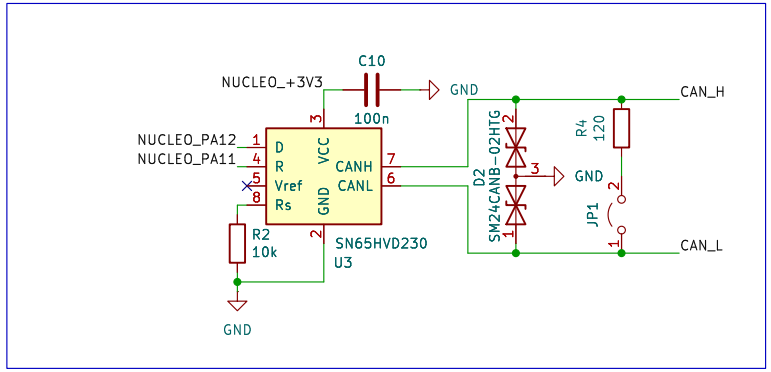

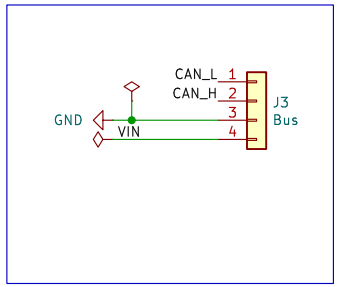

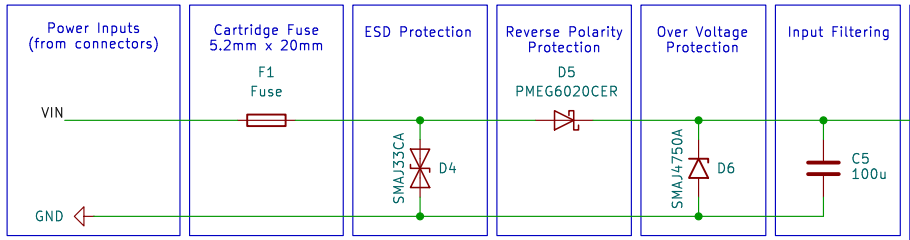

Notes:
- The fuse have a resistance of 3 ohm
- The TVS diode supports reverse voltage (bi-directional)
- The TVS diode start passing at 36.7V
- The reverse polarity diode support voltages up to 60V
- The over voltage protection start passing/limiting at 27V

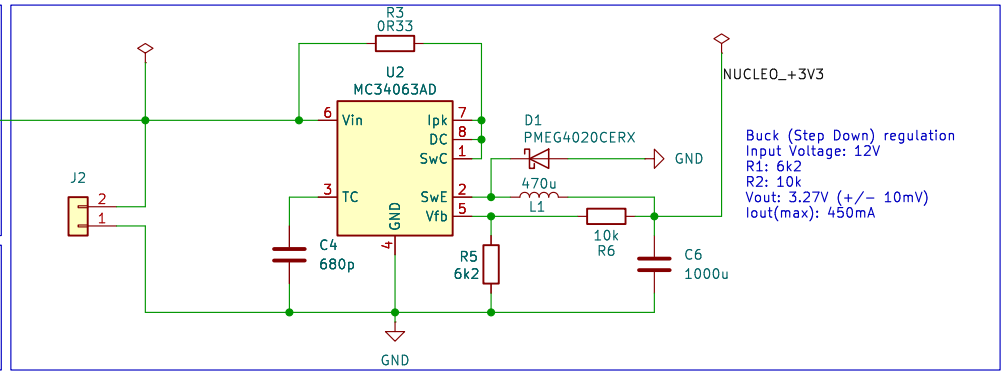

Caipiteam

Sheet: /
File: MCU_Board.kicad_sch

Title: MCU Board

Size: A4	Date: 2019-10-08	**Rev: B**
KiCad E.D.A. 8.0.1		Id: 1/1