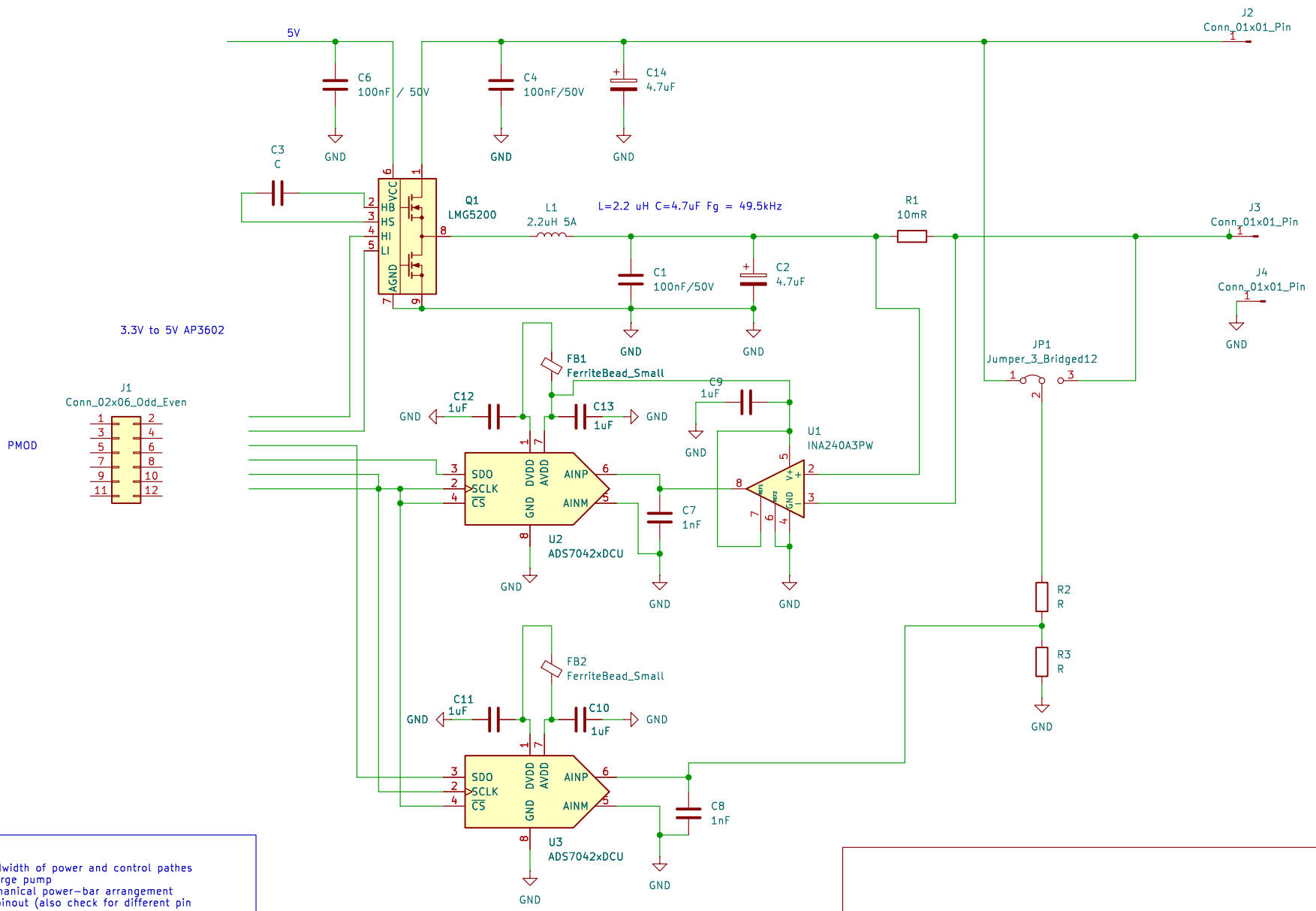

TODO

- Check Bandwidth of power and control pathes
- Add 5V charge pump
- Check mechanical power-bar arrangement
- set PMOD pinout (also check for different pin numbering)

Sheet: /
File: main.kicad_sch

Title:

Size: A4	Date:	Rev:
KiCad E.D.A. 9.0.4		Id: 1/1