PUMP CIRCUITRY

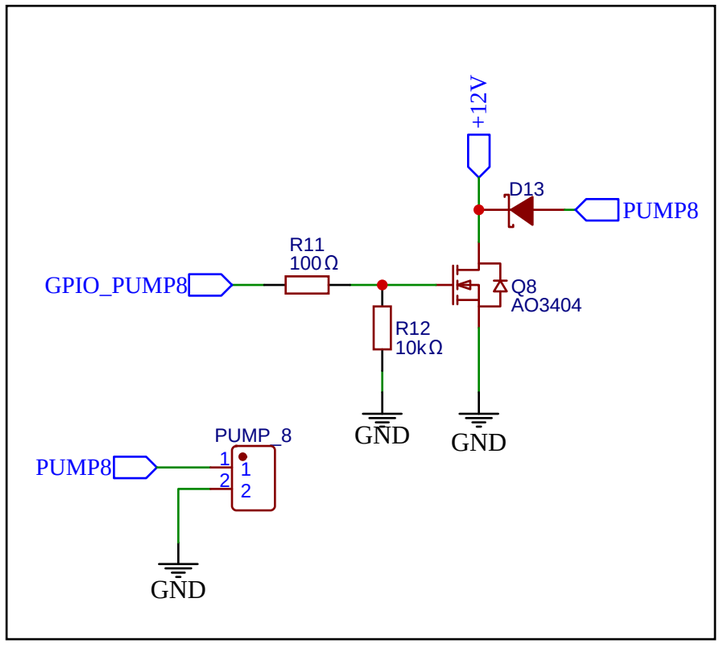

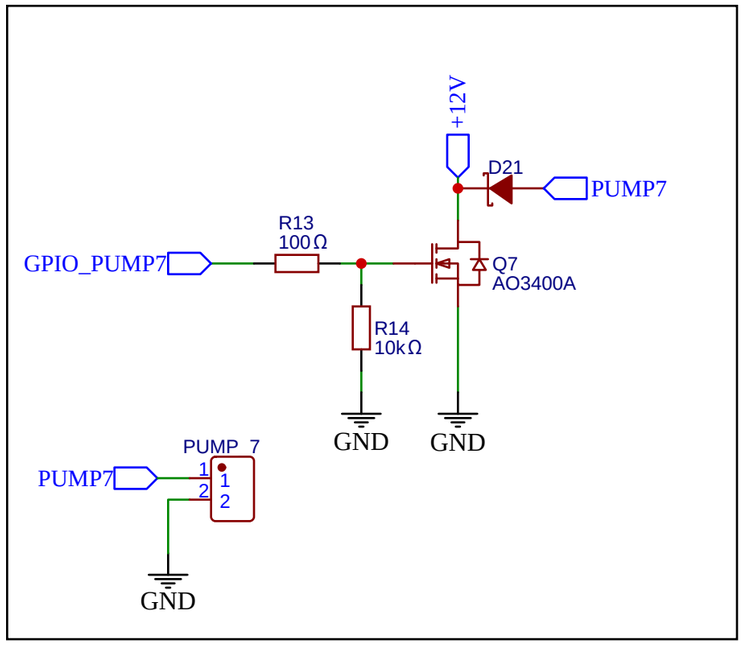

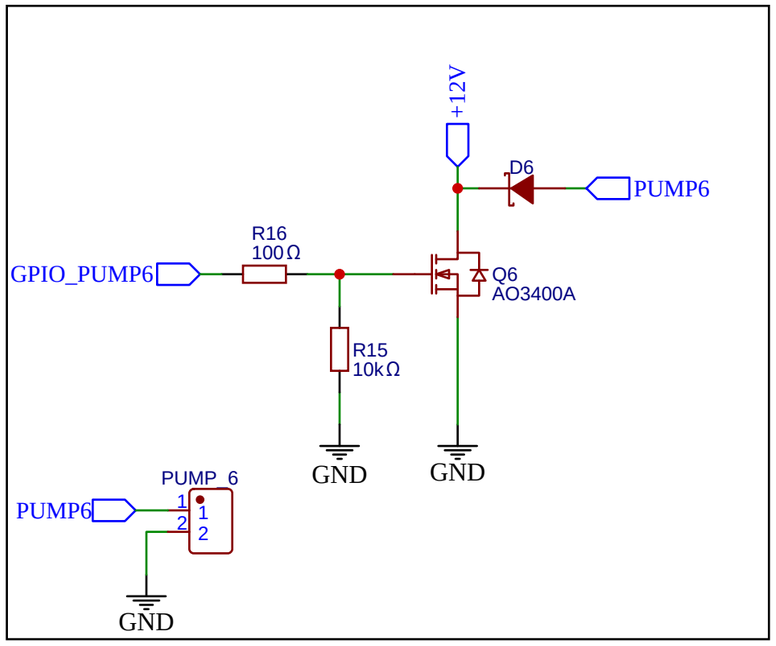

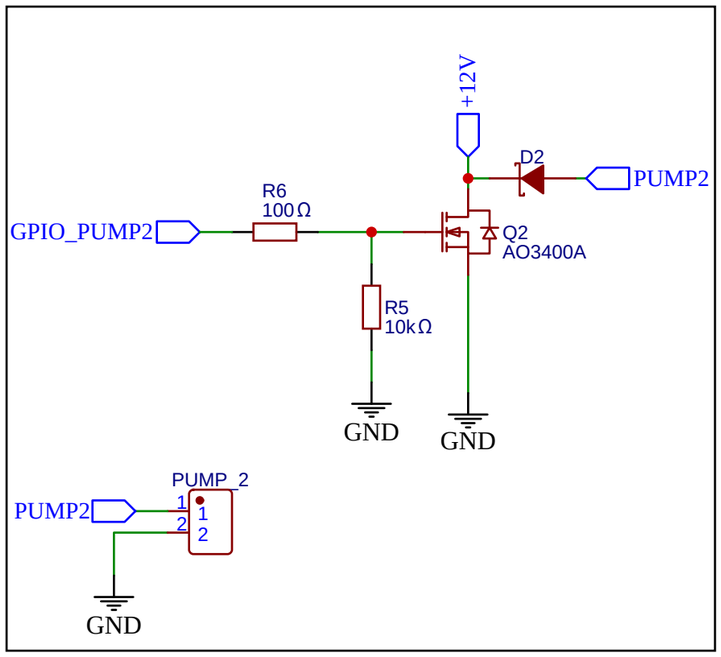

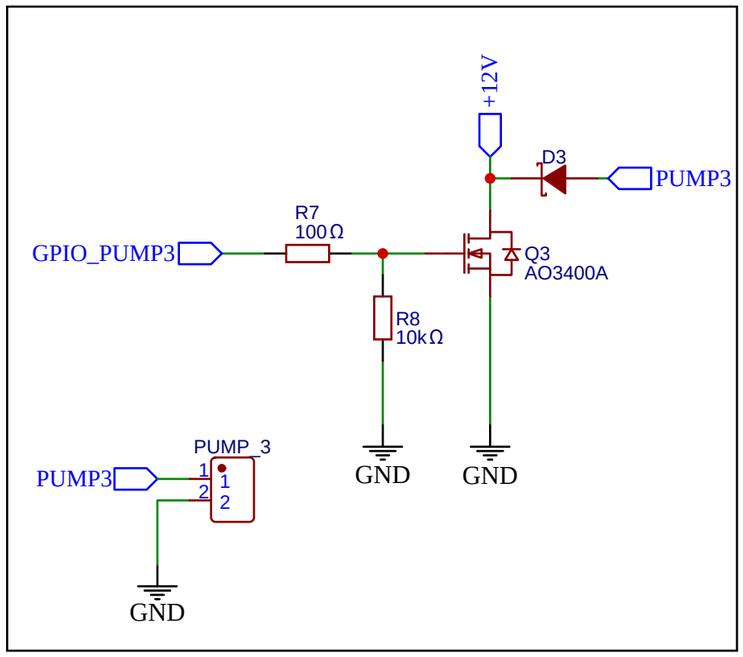

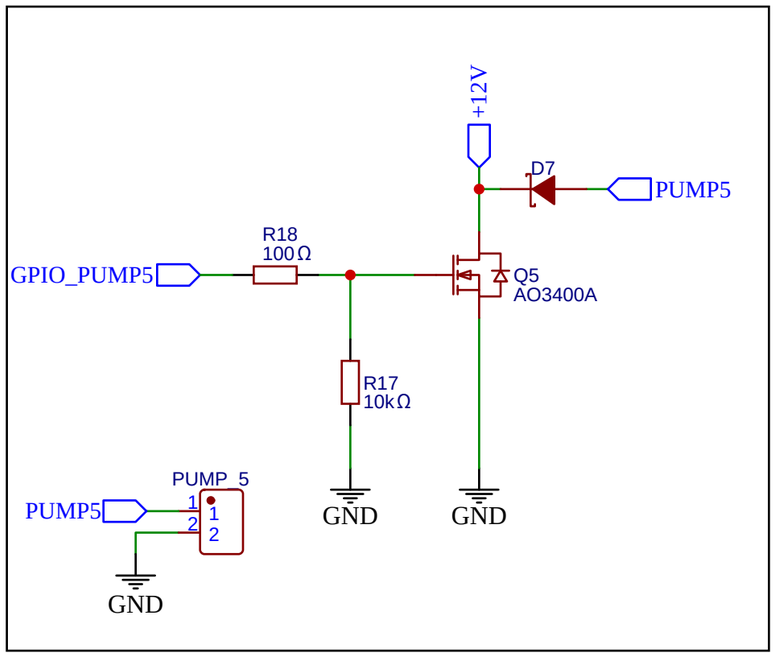

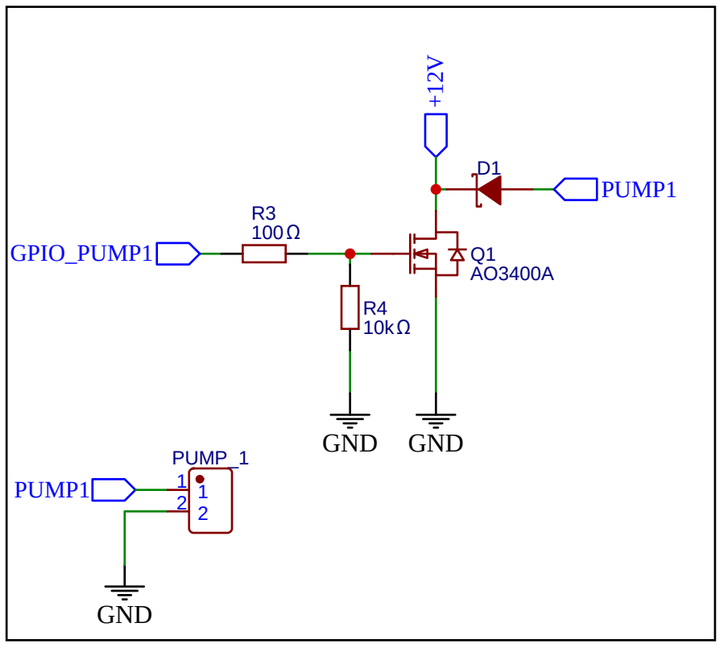

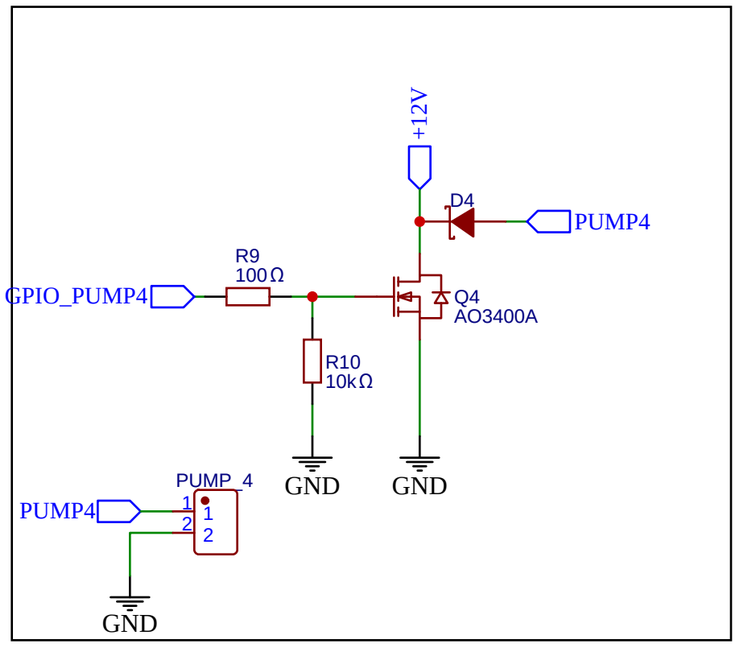

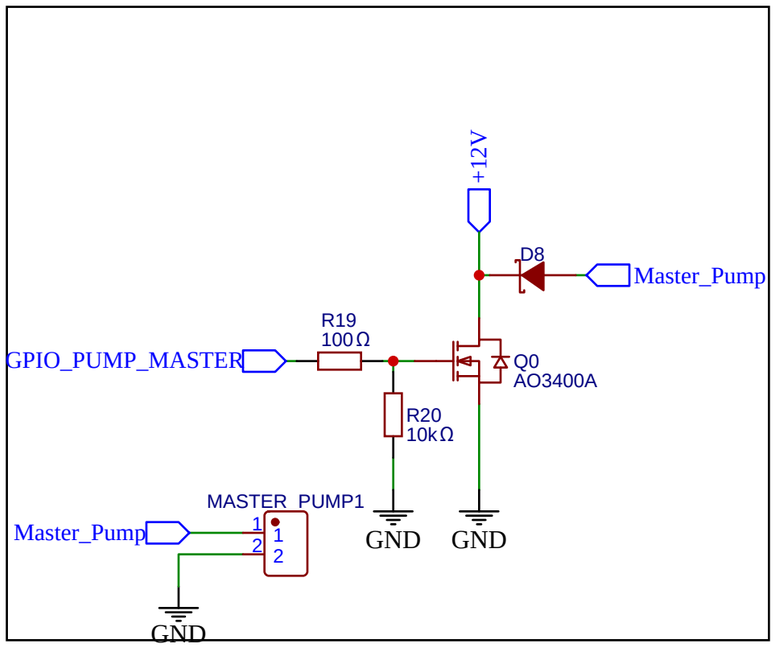

TITLE: Sheet_1	REV: 1.0
EasyEDA Company: josekush001@gmail.com	Sheet: 1/1
Date: 2025-05-23 Drawn By: cajun1689	

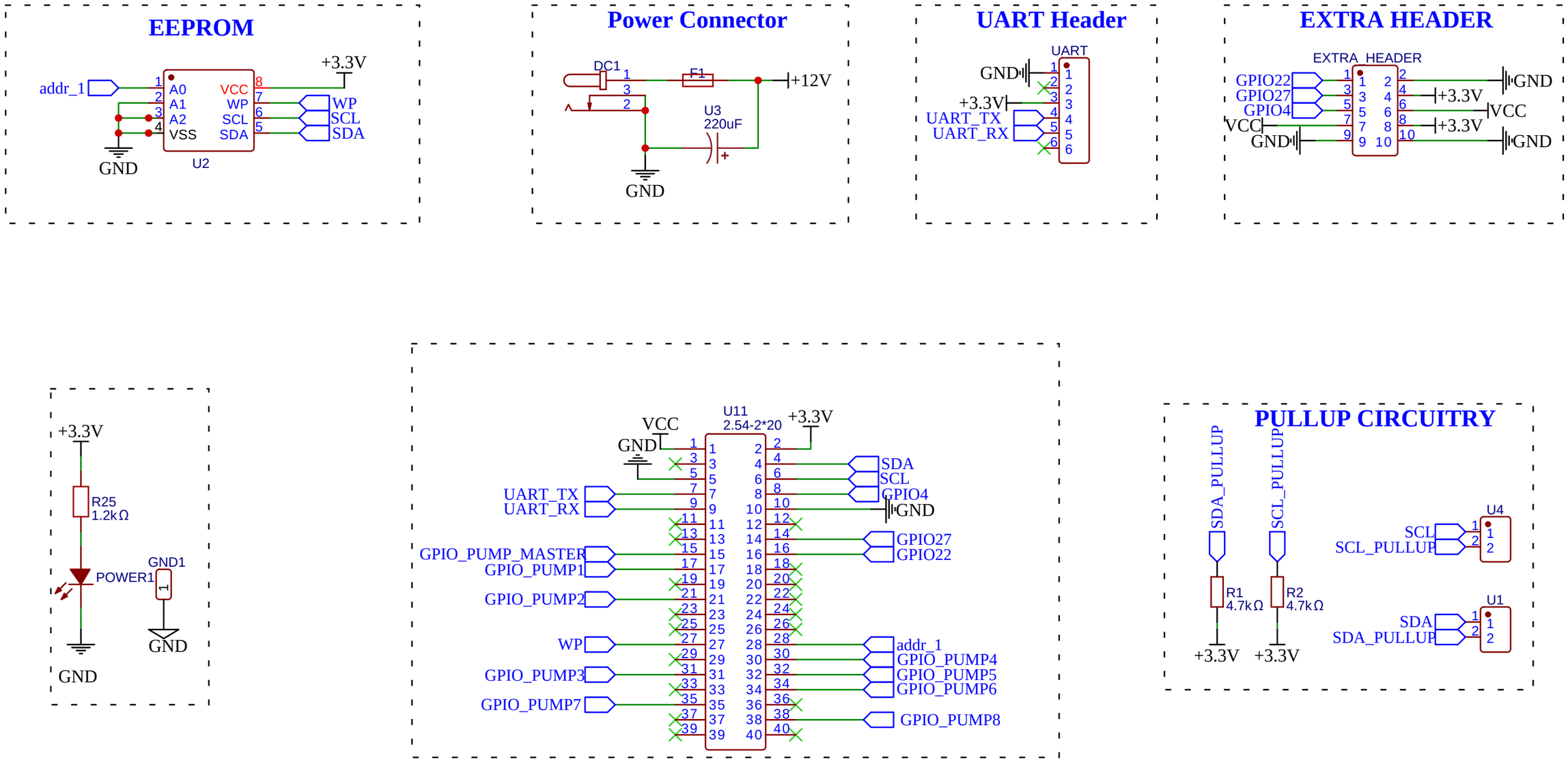

TITLE: Sheet_1		REV: 1.0
EasyEDA	Company: josekush001@gmail.com	Sheet: 1/1
	Date: 2025-06-25 Drawn By: graphene_kuria	

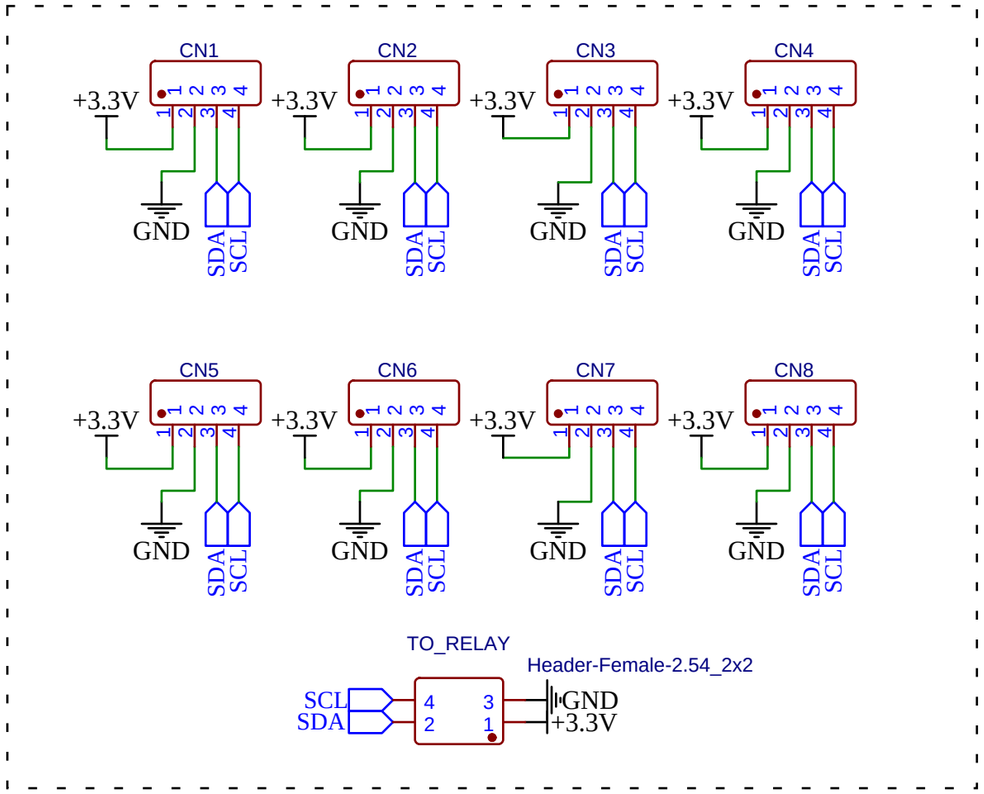

TITLE: Sheet_2		REV: 1.0
EasyEDA	Company: josekush001@gmail.com	Sheet: 1/1
	Date: 2025-06-25 Drawn By: graphene_kuria	