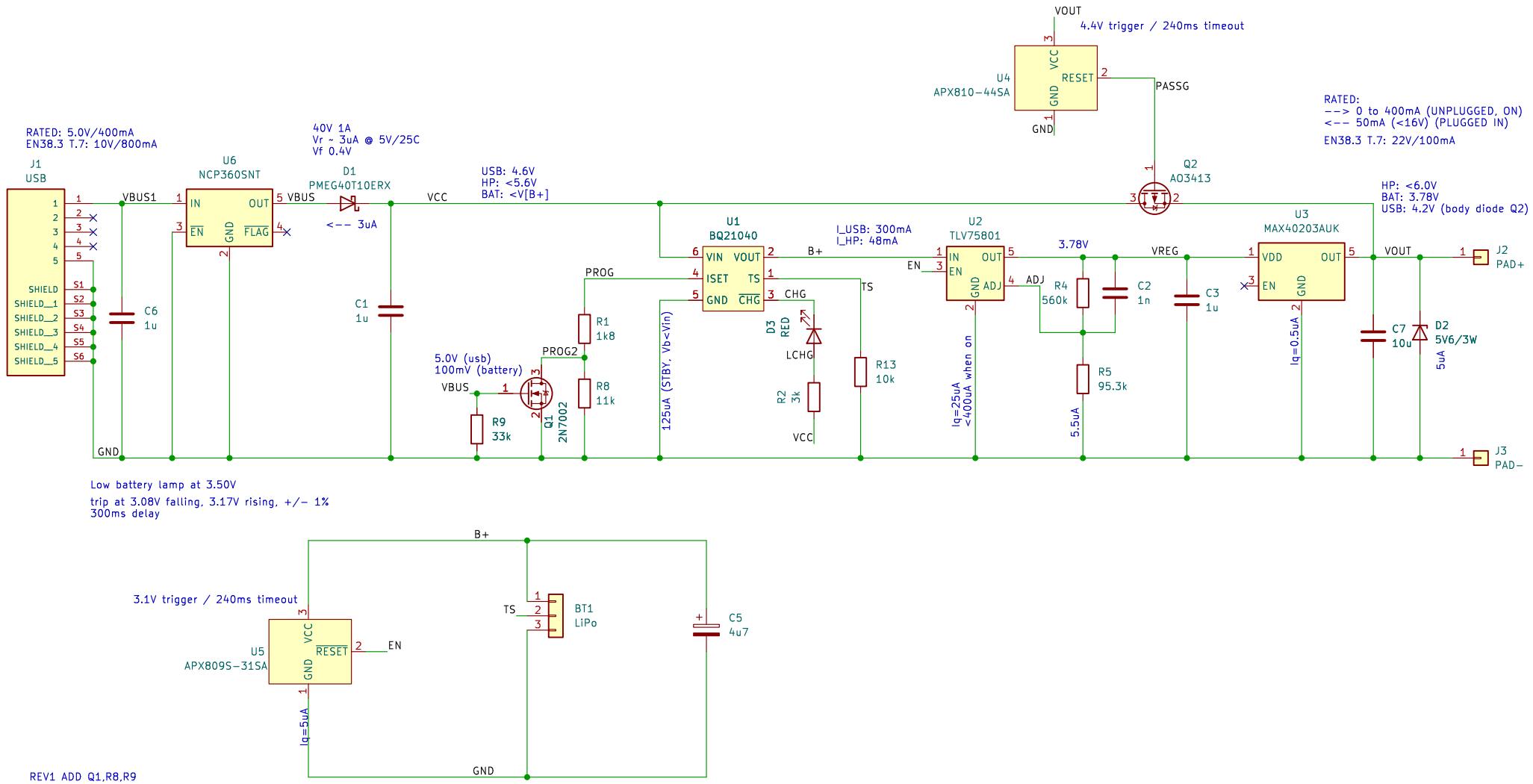

REV1 ADD Q1,R8,R9

REV1.1 U2=TPS73101, U4=S-8261ABJMD, R4=300k, R5=160k, update notes

REV1.2 change D1 to 1N5817, change D2 to 5V6, R8=24k, Add C6

REV2 BOARD LAYOUT CHANGE

REV3 ADD U6, C6, F1. change U4 to TPS3808 (+C4,R6,R7,R10,R11), change U1 to BQ21040, add Q2,D7,R13, move C2, add C7, new name

REV 3.1 remove F1, change R5 to 95.3k

REV 3.2 change U5 to APX

REV 3.3 Add U4,Q2 for active backfeed

REV 3.4 Change R1 to 1k8, R8 to 11k, C7 to 10u

CALCPSU

https://github.com/calcpsu/cphp82001

calcpsu.com.au

Sheet: /

File: cphp82001-pcb.kicad_sch

Title: CALCPACK HP 82001

Size: A4	Date: 2024-01-23	**Rev: 3.3**
KiCad E.D.A. kicad 7.0.10		Id: 1/1